UNITED STATES NAVY

DROP FORGING BOOK

COVERING DROP FORGINGS UNDER ALL BUREAUS FOR WHICH DIES ARE ON HAND AT NAVY YARDS

1919

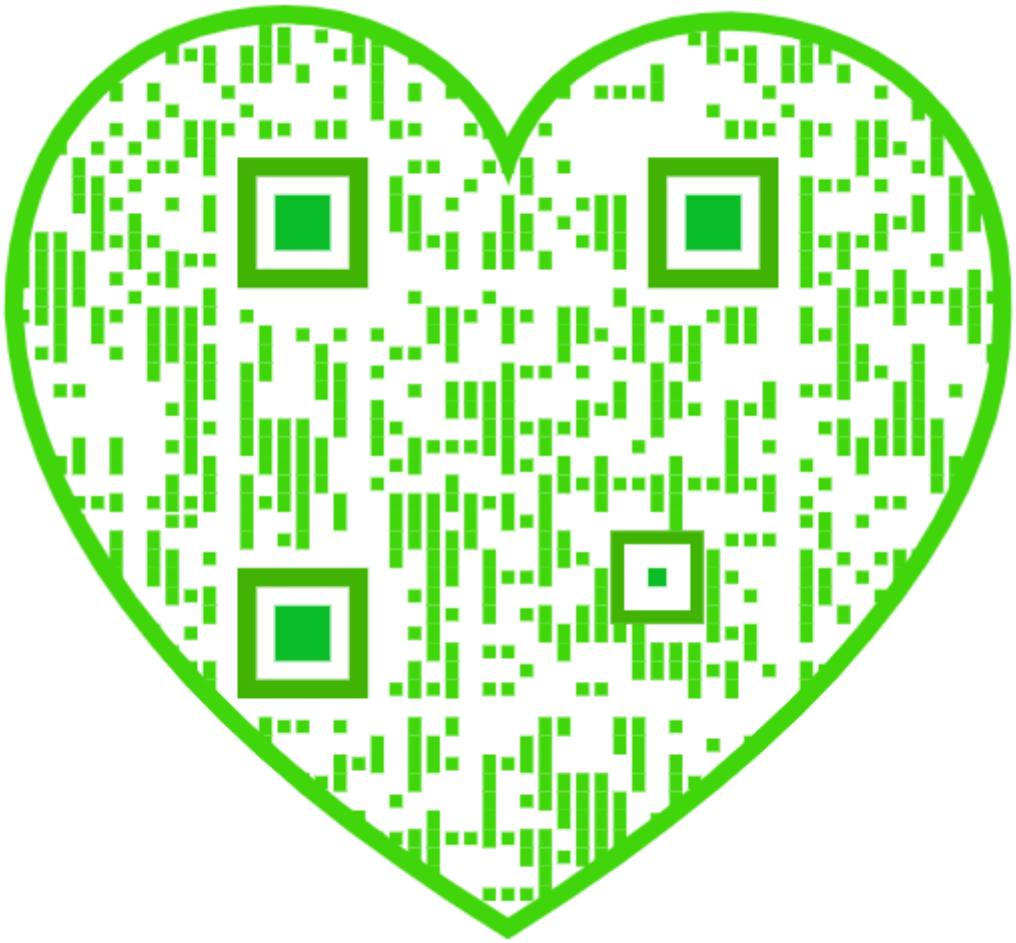

GIFT OF

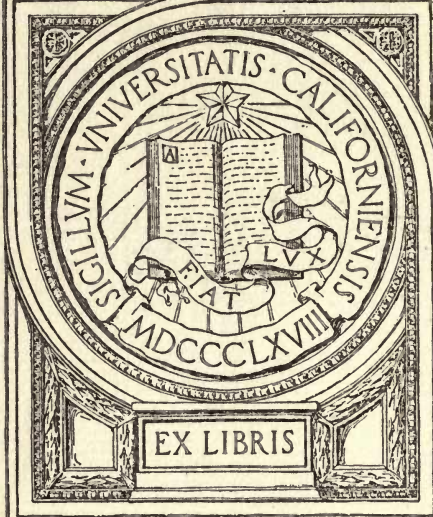
SIGILLVM · VNIVERSITATIS · CALIFORNIENSIS
LUX
FIAT
MDCCCLXVIII
EX LIBRIS

UNITED STATES NAVY

DROP FORGING BOOK

▼

Covering DROP FORGINGS UNDER ALL BUREAUS FOR WHICH DIES ARE ON HAND AT NAVY YARDS

ISSUE OF 1919

WASHINGTON
GOVERNMENT PRINTING OFFICE
1919

T225
U6

DROP FORGING BOOK

UNITED STATES NAVY

PREFACE.

1. PURPOSE.

The quantity of Drop Forging Books which was prepared and issued as the edition of 1917 has been exhausted, and in view of the number of drop forging dies which have been authorized since this edition was prepared, it has been deemed desirable to issue the edition of 1919 at this time, rather than to order the printing of additional copies of the edition of 1917.

In the preparation of this and the previous edition of the Drop Forging Book, it has been the purpose of the Bureau of Construction and Repair to provide a book containing sketch plans of all drop forgings made from dies at the various navy yards in a form similar to a handbook in order that it might be kept always near at hand for ready reference. It is not intended to give elaborate detail plans of the forgings, and the sketches in this book are not provided for use as such, but are for the purpose of indicating the general design of the forging and the dimensions which have influence on the usefulness of the forging for general purposes.

This edition contains the information and plans which were included in both the issue of 1917 and Addendum No. 1, issued 1918.

2. COMPILATION OF DROP-FORGING BOOK.

This book has been compiled from the die books of the New York, Norfolk, Mare Island, Boston, and Portsmouth (N. H.), navy yards, and in its present form represents a consolidated drop-forging die book, containing drawings of the forgings made from each authorized die at these yards. In each case where there is a die at more than one yard, for manufacturing forgings of identical or very nearly identical design, a single sheet has been made for the forging, and a single die number

436957

assigned, designation being made by means of letters attached to the die number, to indicate the yards at which the dies are located.

In connection with this consolidation of die books, new numbers in a series commencing with 1000 have been assigned and it is by these numbers that the dies are to be designated after the issue of this book. In the assignment of these numbers no special effort has been made to arrange the sheets alphabetically as well as numerically, but it is believed that the index to this book will provide the necessary means for readily locating any drop forging. An index of the former die numbers at the several yards with their corresponding new numbers has also been provided to further facilitate the location of the plans of the drop forgings.

In order that the sheet for each drop forging may conveniently indicate the yards at which a die for manufacturing the forging is located, a letter indicating each of these yards has been added as a part of the die number, indicated in the lower right-hand corner of each sheet. The designating letters which have been used are as follows:

P—Portsmouth.
B—Boston.
Y—New York.
N—Norfolk.
M—Mare Island.
S—Puget Sound.

It is not intended that the letters should be given each time it is desired to refer to a die by its number, the number itself being sufficient identification for any die or drop forging. The only purpose of the letters is to indicate the yards at which the dies are located.

3. ASSIGNMENT OF NUMBERS TO NEW DIES.

The assignment of numbers for all new dies which are manufactured at the navy yards is made by the Bureau, either at the time authority to manufacture the die is requested, or in

the case of dies authorized by other bureaus or by the yard authorities, at the time a request for the assignment of the number is received. It is the Bureau's aim to act promptly on requests for assignment of die numbers, in order that the manufacture of the dies at the yards will not be delayed.

In each case where the manufacture of a die has been authorized since June 5, 1915, the date on which the Bureau's circular letter relative to the renumbering of drop forgings was issued, numbers above 3000 have been assigned, and these numbers have been entered upon the respective drawings.

4. MANUFACTURE OF DIES AND PREPARATION OF DRAWINGS.

When a letter is forwarded to the Bureau requesting authority to manufacture a die, it should be accompanied by a plan showing the fitting which it is desired to make. In the case of forgings which are manufactured under authority granted by other Bureaus or by local authority, a plan should be forwarded at the time the request is made for the assignment of a die number. In general, it is considered that the plan should be complete and in the form specified by the Bureau, but in some cases where the need for the die is urgent, or where there are unusual difficulties in the preparation of the plan on account of lack of knowledge as to how the die will be made, it will be satisfactory to the Bureau if a sketch showing the outline and dimensions of the fitting is submitted, or if reference is made to the item number of a standard or Bureau plan on which the fitting appears.

In cases where the completed drawing for the Drop Forging Book is not forwarded prior to the assignment of the die number, the preparation of this plan should be expedited when the required information is available, and the plan forwarded for the Bureau's files.

The following principles should guide the preparation of drawings for this book:

(*a*) The forgings should be shown in the condition in which they are of the greatest general interest. In the case of forg-

ings which have but one definite use, it is considered that the drawings should indicate the condition in which they are used, the necessary machining, drilling, or finishing being clearly indicated by brief notes. In the case of forgings for which there are several known or practical uses, it is believed that no finishing should be shown, except that which may be necessary before the forgings can serve any purpose. Location and size of holes and removal of draft, which may vary according to the use of the forging, should not be indicated unless accomplished in part or in whole during the forging processes.

(*b*) All draft which is allowed to remain on the forgings should be clearly indicated, it being understood that draft which is not shown is removed during the manufacture of the forging.

(*c*) Drawings should be made on standard size sheets with an inner border measuring 10½ by 7½ inches, the outside dimensions of the sheet being 12¾ by 7¾ inches. The title should be arranged in one or two lines to suit the case, the letters in the first line being three-sixteenths inch high, and those in the second line one-eighth inch high. The top of the letters in the first line should be 2½ inches from the bottom border line of the sheet. The scale should be indicated as "full size," "half size," etc.

(*d*) When information is available relative to the weight of the forgings shown on the various plans, it should be forwarded to the Bureau to be incorporated on these plans.

It has been suggested to the Bureau that the plans for the Drop Forging Book include the split line and other information which will permit its use as a working drawing by the die sinker. While this might be desirable for this particular purpose the general use to which the plans in the Drop Forging Book are put does not appear to warrant including this additional information, which tends to make the drawings more complicated. It might be desirable for the yards to maintain a set of prints of the die sheets suitably marked to indicate the method of manufacture of the die and forging. This infor-

mation would then be available for both the navy yard and the Bureau, should occasion arise when such information could be used.

5. NOMENCLATURE OF FORGINGS.

In the preparation of the die sheets for the existing dies, it has been the Bureau's aim to adopt a uniform nomenclature for drop forgings, and one which, as nearly as practicable, is in accordance with the usual commercial designations for similar fittings. The names applied to the fittings by the various navy yards and those given on the Bureau's standard plans have in each case been considered and the name which seems best to indicate the nature of the fitting has been chosen as a title for the die sheet for that forging. It is desired that when die sheets for new dies are prepared in the future the titles be as nearly consistent as practicable with the titles of the sheets in this book for similar forgings.

In the revision of the edition of 1917, it has been found desirable to change the titles of some of the plans in order that they may conform to standard plans which have been issued since this edition was published.

Wherever practicable, a dimension has been chosen by which the size of the forging may be designated, and in such cases this dimension forms a part of the title for the sheet. For instance, all forgings that are classed as eyebolts are designated by the diameter of the shank of the bolt, pad eyes by the size of the wire forming the eye, etc. In each case where the "designating" dimension is shown on the plan of the forging, it has been placed within a small circle, in order that it may be seen at a glance.

6. ORDERING FORGINGS.

In order that some of the confusion may be eliminated which has resulted in the past from the uncertainty as to the condition in which forgings would be received, it is suggested that in the future there be incorporated in all orders for drop forgings the following statement:

(*a*) The name and die number of the forging.

This name should correspond exactly with the title of the die sheet in this book, and the number should correspond to the die number given in the lower right-hand corner of each page. It is, however, not necessary to include the designating letters which form a part of the die numbers as given on the die sheets.

It has been noted from various papers and records which are received in the bureau that in some cases reference is still being made to the old die numbers which were in effect before the Drop Forging Book was issued. In order that confusion in this connection may be avoided, it is requested that all references to dies be made by the die numbers which appear in this book, and it is desirable to avoid the use of the old die books in the various yards. An effort has been made to include the useful information contained in the former die books in the Drop Forging Book, and it would not appear necessary, therefore, to retain copies of the old books.

(*b*) The quantity and material desired.

(*c*) Whether "black" or "galvanized" forgings are desired.

(*d*) Whether "standard forging" or "finished article" is desired.

Standard forging.—This term is understood to apply to forgings as shown on the plans in this book. In the majority of cases, the forgings as shown are without any finishing other than that which may be made as a part of the forging process, but in some cases where the forgings are used for but one purpose and are of no use until certain machining is done, the finishing processes have been indicated. If other finishing than that shown on the plans in this book is desired, a standard forging should not be ordered, and the remarks that follow and which pertain to "finished articles" should apply.

Finished article.—This term is understood to apply to forgings which have been machined or in some way finished for a particular use and is not intended to include "standard forgings" with finishes as shown in this book. In all cases where such articles are desired, it will be necessary to state specifically the finishes required, and to give complete information

for carrying out the work. If fittings are desired finished in accordance with a standard plan, a statement to this effect should be included in the order.

(*e*) In cases where it is indicated on the die sheet that the forging is made in an "open die," the desired length of the open dimension must be stated.

7. MARKING OF DIES AND DROP FORGINGS.

In order that the die number of a forging may be readily determined without the necessity of examining the Drop Forging Book and comparing the dimensions of the forging with the plans contained therein, it is desired that whenever possible the impression in the die include the die number, in order that this number will also appear on the forging. All new dies should be so marked, and when old dies are annealed for repair or other purposes the die number should be cut.

In the case of very small forgings, where it is impracticable to mark the die, it will be satisfactory to the Bureau to omit the marking prescribed above. In marking all dies, care should be taken to place the number in such position that the number of the forging will not interfere with any possible use to which the forging may be put.

8. STANDARD STOCK OF DROP FORGINGS.

Since the first edition of the Drop Forging Book was issued, the Bureau has undertaken the establishment of standard stocks of the various drop forgings which are used in the navy yards, and for which plans are included in this book. In connection with the work, the investigations which have been conducted have indicated that a number of the forgings for which plans are included are no longer used, and in such cases a note has been included on the plan, which indicates that the forgings are not carried as standard stock. In the case of a few of the larger forgings, no stock has been provided, although the forging is still used, and it is expected in such cases that the forgings will be manufactured as the demands may require. No steps have been taken by the Bureau to

establish standard stocks of forgings which are solely under the cognizance of other bureaus.

When dies for the forgings which are not being carried as standard stock wear out or when the navy yards consider that they are no longer of use, the dies should be disposed of, and in order that the Drop Forging Book may be kept up to date by the addenda which are issued, it is requested that the Bureau be informed from time to time of the dies which are disposed of in order that the plans for these dies may be eliminated from the book.

There are a number of classes of articles for which plans are included in this book but which are no longer drop forged in the navy yards. Standard stocks of these articles have been established and these stocks are maintained by purchase, the specifications listed below being used in this connection in preference to the plans contained in this book.

Die Nos. 1431 to 1448, inclusive—Tap rivets. Spec. 43R1c.

Die Nos. 1752 to 1757, inclusive—Chisel blanks for pneumatic tool. Spec. 40B4.

Die Nos. 1803 and 1804—Punches. Spec. 40P1.

Die Nos. 1805 to 1825, inclusive—Rivet sets for use with pneumatic tools. Spec. 40R2.

9. DISTRIBUTION OF DROP FORGING BOOK AND VANDYKES.

(*a*) *Books.*—This revised edition of the Drop Forging Book will be issued to the various navy yards and stations, to the offices of the various superintending constructors, and to other bureaus, in such numbers as appear most desirable, after consideration of the issues of the edition of 1917 which have already been made. The new edition of this book contains a number of plans which were not included in the old edition, or in Addendum No. 1, and in a number of cases the plans have been revised, but it is believed that the books of the older editions may still serve a useful purpose in the yards. It will be necessary, however, that care be exercised in referring to

the Drop Forging Book on manufacture requests, requisitions, schedules, or cost summaries to clearly state to which edition of the book reference is intended. If, in the opinion of the yards, the retention of the older editions of the Drop Forging Book is not desirable, or if but a few of these books are required, it is requested that the books of the older editions which are not needed be returned to the Bureau. While the supply of the edition of 1919 is limited, it is desired that as liberal a distribution as is possible be made, and the Bureau will carefully consider all requests for additional copies of this book.

(*b*) *Vandykes.*—In order that the navy yards may continue the practice of issuing blue prints of the plans of drop forgings to the various shops and offices for use as working drawings, the Boston, Mare Island, New York, Norfolk, and Portsmouth Navy Yards have been furnished with Vandyke prints of the die sheets for such dies as are located at the individual yards. In every case the tracing of the die sheet for each forging is on file at the Bureau.

10. REVISION OF DROP FORGING BOOK.

It is the Bureau's intention to issue about July 1 of each year, commencing 1920, addenda to this book, which will contain sheets for all dies which have been altered and also a sheet for each new die the manufacture of which has been authorized during the preceding fiscal year. At such intervals of time as the number of changes seems to warrant the action, the Bureau will revise and reissue the Drop Forging Book.

11. COMPILATION OF BOOKS OF PLANS OF OTHER DIE PRODUCTS.

This book contains plans of forgings which are made in drop-forging dies and is not intended to include forgings or products made in dies used in other than drop-forging processes. The Bureau is considering the compilation of books of plans of the products of other dies, such as are used in presses, bolt machines, and forging machines, and if it is found that it is practicable to undertake this work a book generally similar to this one will be compiled and issued at some future time.

INDEX.

A.

	Die No.
Air, bulkhead connection, H. P.	3227
by-pass valve, H. P. (right and left hand)	3226
chamber bolt, handy billy pump. (*See* Bolt drop.)	
escape tube flange	1508
hose; socket wrench for	1863
pump eccentric rod for steamer engine	1951–1954
lever for steamer engine	3378
tee, H. P.	3228
valve handle	1496
Air port bolt. (*See* Bolt, drop.)	
socket wrench	1862, 1863
Ammunition stowage fitting	3288
trolley, side strap	2186
whip block strap	1348
Angle valve, H. P.	2215, 2216, 3336
Arm, reversing	1900, 1911, 3263
socket, towel rack	2174
Armor backing bolt	1973
bolt, sleeve, half	1421–1424
Armored hatch:	
dog	1631
Ash bucket handle. (*See* Handle, bucket.)	
cleaning hoe, strongback for	1834
Automatic telegraph:	
dog	2226, 2227
ring	2229
sheave	2228, 3124
Awning bracket	1715
bracket foot	1717
hook	1272
lacing hook	3038
stanchion eye for small boats	3047

Die No.
Awning stanchion, foot 1727, 1728
head 1741, 1742, 1871, 3352
hook band 1712
shackle 3023

B.

Backing-out punch; rivet 1806–1810
Bail, for housing chain stopper for chain cable. 3004, 3181–3186
Ball, board, bulletin 1970
Ball head pin 2119, 2120
Band, brake, end 3136
hook, stanchion, awning 1712
sheet, main 1971
stanchion 1713, 1714
traveler, boom 1972
Bar handle, socket, for handy billy pump 2175
link (steamer engine) 3264
slice; point of 1751
Barrel, pistol, signal 2234
Batten bar fitting 2031
socket 2176, 2177
Battery box gas vent 1968
Battleships, towing gear connecting shackle for 1685
Bearing, rudder 3302
Becket, standard ammunition whip (*see* Bolt, eye, collar) 1302–1309, 3332, 3345
Belaying pin 2121–2123
Bench, mess; fittings (*see* Fittings).
Bending shackle, chain cable 1686, 1689, 1695, 3040
Berth, folding:
hinge hook 2061
support 3197
supporting hinge. (*See* Hinge, female, or Hinge, male.)
Blade, hinge, water-tight doors. (*See* Hinge, male.)
stop, female, left-hand 1826, 1830
right-hand 1827, 1831

Die No.
Blade, stop, male, left-hand 1828, 1832
right-hand 1829, 1833
Blank for rivet sets. (*See* Set, rivet.)
shearing coupling (mine sweep gear) 3091
Block, coaling; shackle 1688, 1689
double; strap, inner 1332–1339
outer 1340–1347
metal; strap, outer 1348
wood; strap, outer 1349
hook. (*See* Hook, eye.)
snatch. (*See* Hook, swivel.)
link (cutter engine) 3244
single; strap 1318–1325
metal; coaling; strap 1330, 1331
strap 1326–1328, 3333
wood; strap 1329
sister hook. (*See* Hook, sister.)
snatch; crosshead 1357–1363, 3203–3206, 3276, 3311, 3312, 3323, 3405
hasp 1364–1369, 3207–3210, 3313–3315, 3325-3406
latch 1893–1899, 3316–3318
link 3211–3214, 3324, 3407
strap 1350–1356, 3199–3202, 3304, 3319–3322, 3404
swivel link. (*See* Swivel link.)
strut, thrust, for 50-foot cutter engine 3247
Blocking hook, dry dock 1282
staple, dry dock 2180
Board, bulletin; ball 1970
Boat chain slings, shackle for. (*See* Shackle.)
chest, button for. (*See* Button, with eye.)
chock pad 2130, 2131
shackle for. (*See* Shackle.)
stay rods. (*See* Bolt, drop.)
chocks; strut jaws. (*See* Rod, jaw-end.)
detaching apparatus: link end. (*See* Bolt, drop.)

Die No.
Boat hoisting shackle 1696–1699
Boats, small, bottom-board button 2001
Body, spray valve, fuel check 3258
Boiler bolt 3226
bushing, launch 3080
cap, launch 3020
circulating tube plug 1932
fire door; hinge. (*See* Hinge, male.)
plug pipe (for boiler header) 3134
tube cap 1906
yoke stay 1969
Bolt, ammunition trolley. (*See* Pin.)
armor, sleeve, half 1421–1424
backing, armor 1973
boiler 3226
brick 1555
dog 1635
dog, for gun-port shutters 1974
drop 1569–1598, 2237, 2238, 3018, 3061, 3062
nut 3063
eye 1105–1153, 1975–1981, 3037, 3055–3059, 3089, 3094, 3159–3163, 3354–3356
collar 1000–1104, 1300, 1301, 1562, 1982, 3019, 3025, 3193, 3300, 3327, 3328, 3347, 3360, 3361
davit head fitting 3357
for seaplane 3129
life line 1553
handhole plate for B. & W. boiler 3259
hook. (*See* Hooks, lashing.)
latch for soot door. (*See* Dog, with spindle.)
Lewis 1556, 1557
key for 1558
locking 1550–1552
screw, rigging 1564–1568
seaplane 3129
securing 1559–1561
spindle, for boiler handhole covers 1983

	Die No.
Bolt, toggle. (*See* Bolt, eye, collar.)	
track	1554
Boom, traveler: band	1972
Bottom-board button for small boats	2001
Bowsprit: inner end	1984
outer end	1985
Box, swivel	3041–3043
chain cable	1986, 1987, 3002, 3039, 3050–3054, 3088, 3093
mooring	3215
Brace, bench and table, mess; groove in	1291
leg, bench mess	1295, 3188
leg, table mess	1293, 3187
rod, bench mess	3092
rod, bench and table, mess; hook for	1299
end; cutter engine. (*See* Bolt, drop.)	
eye end, mess bench and table	2032
rudder; cutter	1989, 1990
cutter, racing	1991
dinghy and wherry	1992
launch, sailing	1993
whaleboat	1994
Bracket, awning	1715
foot of	1717
bench and table, mess	1292
fender, pudding	1995
towel rack	1996, 1997
Braider, pawl for. (*See* Pawl.)	
Brake band end (for wire hawser reel)	3136
end, handy billy pump. (*See* Socket, bar handle.)	
Brick bolt	1555
Bridge, clamping	1902–1905, 1988, 1999, 3014, 3127
stanchion, foot of. (*See* Foot, stanchion, rail.)	
Bucket handle	1495
Bulkhead connection H. P. fitting	3227
coupling H. P. fitting	3223
patch plug	2232, 2233

Die No.
Bulkhead patch plug nut 2230, 2231
Bulletin board; ball 1970
Buoy pad eye for marker buoys 3090
swivel, cork 2188
Bushing, boiler launch 3080
Button, bench and table, mess 1289
board, bottom, for small boats 2001
boat chest. (*See* Button, with eye.)
rivet set 1816–1818
with eye 2000
By-pass valve, H. P. (right and left hand) 3266

C.

Cable retaining shackle for N. D. mine. (*See* Shackle.)
Cage mast fittings:
bottom—
left hand 2033
right hand 2034
top—
left hand 2035
right hand 2036
Cam, inlet, exhaust, for submarine engine 3293
Canopy pin 2125
Cap, boiler, launch 3020
projectile, 6-inch 2002
projectile, A. P., 8-inch 3016, 3017
tube, boiler 1906
Cap, square, crosshead, pump 1907
Cape chisel, hexagonal; point 1758
octagonal; point 1759–1761
Cargo port dog 1626–1630
Catch for folding berths 3079
Catch for uptake doors (*See* Dog) 3275
Center strap, double block. (*See* Strap, inner, block, double.)

Chain cable: Die No.
bending shackle 1686, 1687, 1695, 3040
connecting shackle 1690, 3000, 3010, 3011, 3028–3029, 3035, 3083, 3085, 3095, 3137, 3139, 3141, 3143
connecting shackle pin 3001, 3008, 3009, 3030, 3031, 3036, 3084, 3086, 3096, 3138, 3140, 3142–3144
swivel box 1986, 1987, 3093, 3215, 3002, 3039, 3050, 3054
mooring 3215
Chain plate 2003–2005
stopper connecting shackle 1684
studs 1449–1470, 3032, 3033
swivel clinch ring 1988
Check spray valve body 3258
Chipping hammer 1783
Chisel, cape, hexagonal, point 1758
octagonal 1759–1761
diamond point, octagonal 1762
flat, hexagonal; point 1766, 1767
octagonal 1763–1765
gouging, octagonal 1768
hexagonal; shank 1752–1756
octagonal; shank 1757
ripping, octagonal 1769
scaling; shank 1771
square 1770
Chock, boat; strut jaws. (*See* Rod, jaw-end.)
Circulating boiler tube plug 1932
Clamp 1772–1775
deck beam 3359
case, mine 2050
collar 3261
machinist 3348
peep sight 3351
tube 3081, 3082
Clamping bridge 1902–1905, 1998, 1999, 3014, 3127
screw 2166
Claw, devil 1837

Die No.
Cleat 2006–2008
Clinch ring, chain swivel 1988
Clip, hanger, pipe 2009
rail 2010, 2011, 3380, 3381
shell 2012
Coalbucket handles. (*See* Handle, bucket.)
bunker door hinge 1413
chute, locking pin. (*See* Bolt, locking.)
portable; locking bolt. (*See* Bolt, locking.)
scuttle, securing bolt 1559–1561
socket wrench for 1864, 1865
strongback 2183–2185
T wrench 1866
Coaling block, single, metal; strap 1330, 1331
shackle 1688, 1689
swivel eye. (*See* Bolt, eye, collar.)
boom, pin. (*See* Bolt, eye, collar.)
shackle, for. (*See* Shackle.)
whip, hook 1279, 1280
Collar eye, bolt 1000–1104, 1300, 1301, 1562, 1982, 3019, 3025, 3129, 3193, 3300, 3327, 3328, 3347, 3360, 3361
davit head fitting 3357
clamp 3261
lug 2013, 2014
Commutator segment 2161–2165, 3015
Compression riveters, set for 1814
Connecting rod, blower engine 3372
circulating engine 3373
gasoline engine 1942, 1943
steamer engine 1944, 1946
50-foot cutter engine 3245
shackle 1683–1685
chain cable ..... 1690–1694, 3000, 3010, 3011, 3028, 3029, 3035, 3083, 3085, 3095, 3137, 3139, 3141, 3143, 3399, 3401.

Die No.
Connecting shackle, chain cable, pin for..... 1705–1710, 3001, 3008, 3009, 3030, 3031, 3036, 3084, 3086, 3096, 3138, 3140, 3142, 3144, 3400, 3402.
Connection piece for fuel-oil pipe..... 3274
bulkhead, H. P..... 3227
Cooling water connection for engine exhaust valves. (*See* Valve, straightaway.)
Cork buoy swivel..... 2188
Countersunk rivet set..... 1819–1824
Coupling, bulkhead for H. P. fittings..... 3223
shearing blank for (mine sweep gear)..... 3091
wrench..... 3343
Cover brace foot for water-tight hatch. (*See* Bolt, drop.)
Cover, handhole, oval..... 1910
oval, with spindle..... 1911, 3013
rectangular..... 1912, 3128
rectangular, with spindle..... 1913
hook..... 1284
Cowl, vent, rod, end for. (*See* Rod, jaw-end.)
Crank, hand..... 1914, 1915
handle (wire hawser reel)..... 3135
shaft, engine, blower for steamer engine..... 3376
circulating for steamer engine 3375
shaft, gasoline engine..... 1959
strap, end, for deck winch..... 1967
Cross, H. P..... 2015
Crosshead, block, snatch..... 1357–1363, 3203–3206, 3276, 3311, 3312, 3323,
key for steamer engine..... 1916
pump..... 1908
pump; cap-square..... 1907
Cross pad eye..... 1184–1219
valve H. P..... 3334
Crow foot (for Scotch boilers)..... 3229
Cutter, racing, rowlock..... 2150
rowlock socket..... 2155
rudder brace..... 1989, 1990

Die No.
Cutter, 24-foot, rowlock 2153
rowlock socket 2158

D.

Damper handle for ventilation terminal 3290, 3301
Deck beam clamp 3359
Destroyers, towing gear connecting shackle for 1683
Devil claw 1837
Diamond-point chisel, octagonal 1762
Dinghy, rowlock for 2151
rowlock socket for 2156
rudder brace for 1992
Disk for safe locker in secretary bureau 3255
Dog bolt (*see* Bolt drop) 1635
for gun port shutters 1974
handle 1636–1640, 3068, 3133, 3147
for boiler casings 3396
with spindle 1641–1644,
for boiler casings 3395
nose pad 2141
pad. (*See* Hinge pad, female.)
for portable ventilators 2132
spindle for flush water-tight hatch. (*See* Bolt, dog.)
socket 3067
Dogs 1599, 1600
with spindle 1601, 1602
fireroom hatch. (*See* Dog flat.)
flat 1603–1608, 2168, 3066, 3145
handhole plate. (*See* Bridge, clamping.)
handled 1609–1615
with spindle 1616–1624, 3060, 3064, 3065, 3125, 3132, 3148, 3192, 3224, 3353
hatch, armored 1631
latch 1625
magazine bulkhead light box. (*See* Dog, handled.)
port, cargo 1626–1630

Die No.
Dogs, shipwright's 1632–1634
soot door. (*See* Dog, with spindle.)
stowage box. (*See* Dog, handled.)
telegraph, automatic 2226, 2227
uptake doors. (*See* Handle, dog.)
Doors, clamp nut for water-tight coal bunker. (*See* Handle, dog.)
hinge, bunker, coal 1413
hook 1283
knob 3383
for safe locker in secretary bureau 3254
staple 2179
T-handle 3384
Dory, rowlock 2151
socket 2156
Dotter, solenoid; housing 3012
Double block strap, inner 1332–1339
outer 1340–1347
metal block strap, outer 1348
wood block strap, outer 1349
Draft figure 2018–2026
Drift pin 1788–1802
Drill 1776
Drop bolt 1569–1598, 2237, 2238, 3018, 3061, 3062
nut 3063
pad—
for gun port shutters. (*See* Hinge pad, female.)
for single companion hatch. (*See* Hinge pad, female.)
for turret watersheds. (*See* Hinge pad, female.)
for water-tight manhole. (*See* Hinge pad, female.)
Dry dock blocking hook 1282
staple 2180

E.

Die No.

Eccentric rod, ahead for 50-foot cutter engine 3256
rod, astern for 50-foot cutter engine 3257
rod head, steamer engine 1949, 1950
rod, air pump, steamer 1951–1954
steamer engines 1947, 1948
Elbow, H. P 2016, 3221
Electric cutter rowlock 2149
End, brake band (wire hawser reel) 3136
of link for detaching apparatus for boats. (*See* Bolt, drop.)
for valve, cutter engines. (*See* Bolt, drop.)
jaw for Scotch boiler 3230
Ensign halyard eye. (*See* Bolt, eye, collar.)
Exhaust valves, engine; cooling-water connections. (*See* Valve, straightway.)
Extractor, shell 3220, 3284, 3289
Eye bolt 1105–1153, 1975–1981, 3037, 3055–3059, 3089, 3094, 3159–3163, 3354–3356
for hose rack hinge. (*See* Bolt, eye, collar).
for portable coal chute. (*See* Bolt, locking.)
collar 1000–1104, 1300, 1301, 1562, 1982, 3019, 3025, 3193, 3300, 3327, 3328, 3347, 3360, 3361, 3357
life line 1553
plain. (*See* Bolt, eye.)
seaplane 3129
shouldered. (*See* Bolt, eye, collar.)
Eye hook. (*See* Hook, single, side.)
Eye pad 3078
cross 1184–1219
marker buoys 3090
straight 1154–1183
Eye pin. (*See* Bolt, eye, collar.)
Eye, center, stanchion, life line 1716
ensign halyard. (*See* Bolt, eye, collar.)
jack rod. (*See* Bolt, eye, collar.)
screw. (*See* Bolt, eye.)

Eye, shroud. (*See* Bolt, eye, collar.) Die No.
stanchion, awning, for small boats..... 3047
swivel..... 2027, 2028, 3021, 3044–3046, 3216
mooring swivel..... 3216
tarpaulin..... 2029, 2030
turnbuckle. (*See* Bolt, eye.)

F.

Fastener, locker, wire..... 2017
Feed pump lever, for steam launch..... 1917
Female hinge..... 1370–1385, 3072, 3074, 3075, 3130, 3149, 3219
pad..... 1398–1412, 3070, 3071, 3126, 3151, 3198
Figure, draft..... 2018–2026
Fire-cleaning hoe, strong back..... 1835, 1836
Fire control equipment:
catch, gear training..... 3275
lever..... 3281
lever gear clutch..... 3279, 3280
lever stop..... 3282
nut..... 3283
stop, training..... 3285
platform, stanchion, band for. (*See* Band, stanchion.)
support end. (*See* head, stanchion.)
Fire-door hinge for B. & W. boiler. (*See* Hinge, male.)
Fire-hose spanner wrench..... 1874
Firing gear shackle for N. D. mine. (*See* Shackle.)
spanner for N. D. mine. (*See* Wrench, machine, single-ended.)
Fitting bar, batten..... 2031
ammunition stowage..... 3288
bench, mess—
brace, leg..... 3188
end of..... 1295
rod..... 3092
eye..... 2032
hook for..... 1299

	Die No.
Fitting bench, mess; braces, groove in	1291
bracket	1292
button	1289
leg, foot of	1290
Fittings, boat stowage—	
stay-rod pad	3027
strut pad	3026
H. P.	
bulkhead connection	3227
bulkhead coupling	3223
elbow	2016, 3221
strainer	3273
valve by-pass	3266
tee	2189, 3222, 3288
mast, cage—	
bottom, left hand	2033
bottom, right hand	2034
top, left hand	2035
top, right hand	2036
mine, N. D.—	
axis, drum, cable	2037
brake pawl	2044
claw stricker	2038
connection cable	2039
firing seating gear	2047
lever	2043
lifting eye	2040
piston	2045
plunger	2046
shackle-pin head	2042
yoke	2049
table, mess—	
brace leg	1293, 3187
brace rod, hook for	1299
eye for	2032
braces, groove in	1291
bracket	1292

	Die No.
Fittings, table, mess—Continued.	
button	1289
leg	1296
leg, foot of	1290
leg, left, head of	1297
leg, right, head of	1288, 1289
pad, deck	3146
Flanges	1498–1507, 1509–1514
flexible	3111–3122, 3296, 3297, 3389–3391
H. P	3232–3239, 3267–3269
hollow heel	3099–3110, 3294, 3295, 3392–3394
L. P	3240–3243
tube, escape, air	1508
sounding	1508
Flat chisel, hexagonal point	1766–1767
octagonal	1763–1765
Flat dog	1603–1608, 2178, 3066, 3145
Fly bolt, (*See* Bolt, drop.)	
Folding berth catch	3079
hinge support	3179
Foot, awning bracket	1717
crow for scotch boiler	3229
of leg, bench, and table, mess	1290
locker	2051
stanchion	1718, 1720–1733
stanchion, rail	1719, 1723, 1726
Force-pump lever, plumber's	1918
Fulcrum link, throttle valve, for steamer engine	2096–2099
pump	2052
Furnace hammer	1777

G.

Galley tub keeper	2066
Gasoline engine crank shaft	1959
Gas vent for battery box	1968
Globe valve H. P	3335

Die No.
Gooseneck, male 1471–1474
Gouging chisel, octagonal 1768
Grab handle 1478–1482, 2239, 2240
iron for water-tight door. (*See* Handle, grab.)
rod 1483–1489, 1492
coal scuttle. (*See* Handle, straight.)
support 2053, 2054
straight 1490, 1491
Grip, hatch. (*See* Grab, straight.)
Groove in braces, bench and table, mess 1291
Guard line stanchion; head 1735
Gudge on rudder. (*See* Bolt, drop.)
Guide pad for gun port shutters 2134, 2135
rod for safe locker in secretary bureau 3251, 3252
Gun circle bolt. (*See* Pin.)
port shutters, dog bolt for 1974

H.

H. P. angle valve 2215, 2216, 3336
bulkhead coupling 3223
cross 2015, 3334
elbow 2016, 3221
globe valve 3335
strainer 3273
tee 2189, 3222, 3228
valve handle 3337
Hammer, chipping 1783
furnace 1777
pistol, signal 2235
riveting 1778–1781
shipfitter's 1782
Hammock hook 1267–1269
Hand crank 1914, 1915
Handhole cover, boiler, bolt spindle 1983
oval 1910
clamping bridge for 1902
with spindle 1911, 3013

Die No.
Handhole cover, boiler, rectangular 1912, 3128
clamping bridge for 1904, 1905
with spindle..... 1913
Handhole plate. (*See* Cover, handhole.)
bolt for. (*See* Bolt, spindle.)
dog for. (*See* Bridge, clamping.)
Handle 1493, 3195, 3196, 3338
bar socket for handy billy pump..... 2175
bucket..... 1495
coal scuttle. (*See* Grab, straight.)
crank for wire hawser reel..... 3135
damper for ventilation terminals..... 3290, 3301
dog..... 1636–1640, 3068, 3133, 3147, 3396
dog, with spindle..... 1641–1644
door. (*See* Handle, grab.)
face plate..... 3194
grab..... 1478–1482, 2239, 2240
plate..... 2143
pump..... 2055–2057
tool, fire..... 1494
valve, air H. P..... 1496
H. P..... 3337
vent turning gear. (*See* Bolt, drop.)
wrench, socket and T..... 1870
Handled dog..... 1609–1615, 3133, 3147
with spindle..... 1616–1624, 3060, 3064, 3065, 3125, 3132, 3148, 3192, 3224, 3353
Hand rail; knob..... 2082
pad. (*See* Foot, stanchion.)
Handwheel..... 2058
Hanger, after, for 21-foot motor dory..... 3278
locker, mess, wire..... 2059, 2060
pipe, clip..... 2009
Hasp, block, snatch ... 1364–1369, 3207–3210, 3313–3315, 3325
latch for..... 2083

Die No.
Hatch, armored, dog..... 1631
Head, eccentric rod, steamer engine..... 1949, 1950
of leg, table, mess—
left..... 1297
right..... 1288, 1292
stanchion..... 1734–1746, 3252
awning..... 1871
Hinge berth support..... 3197
blade, water-tight doors. (*See* Hinge, male.)
hook for folding berth..... 2061
jaws for canopy frame. (*See* Hinge pad, female.)
pad—
female..... 1398–1412, 2140, 3070, 3071, 3126, 3151, 3198
gas engine cover, for..... 3291
male..... 1414–1420, 3073, 3131, 3150, 3309, 3350
metal hose rack. (*See* Hinge, male.)
nonwater-tight hatches and manholes. (*See* Hinge, female.)
nonwater-tight doors, hatches, and manholes. (*See* Hinge, male.)
Hinges, coal bunker trim door. (*See* Hinge, female.)
door, bunker coal..... 1413
double companion hatch. (*See* Hinge, female.)
female..... 1370–1385, 3072, 3074, 3075, 3130, 3149, 3219
gun-port shutters. (*See* Hinge, female.)
hose rack. (*See* Hinge, male.)
male..... 1386–1397, 3069, 3076, 3077, 3152, 3271
nonwater-tight doors. (*See* Hinge, female.)
raised water-tight hatch. (*See* Hinge, female.)
supporting, folding berth. (*See* Hinge, female.)
Hoe, ash cleaning, strongback for..... 1834
fire cleaning, strongback for..... 1835, 1836
Hoisting bolt for whaleboat. (*See* Bolt, drop.)
hook for steam cutters in heavy weather. (*See* Hook, eye.)
pad, boat; for sailing launches and cutters.... 2136

Die No.
Hoisting shackle, boat 1696–1699, 3387
Hook band, stanchion, awning 1712
latch 3272
pad 1563, 2137, 2138
Hooks, awning 1272
block. (*See* Hook, single, side.)
bolt. (*See* Hook, lashing.)
brace rods, bench and table, mess 1299
eye. (*See* Hook, single, side.)
coaling whip 1279, 1280
cover 1284
door 1283
dry dock blocking 1282
hammock 1267–1269
hinge, for folding berth 2061
lacing, awning 3038
lashing 1281
life line 1270, 1271
pelican 1273–1277
pelican, for housing chain stopper for chain cable 3005, 3164–3169, 3217
single, side 1220–1236, 3299, 3330
sister 1250–1266, 3346
staple, door 2179
swivel 1237–1249, 3310, 3329
tarpaulin 1285–1287
traveler, mast 2062
trolley, ammunition 1278
Hose rack hinge eyebolt. (*See* Bolt, eye, collar.)
strap. (*See* Hinge, female.)
Hose, air; socket wrench for 1863
fire; spanner wrench for 1874
spanner wrench for 1872–1875
suction; spanner wrench for 1875
Housing chain stopper for chain cable:
bail 3004, 3181–3186
pelican hook 3005, 3164–3169, 3217

Housing chain stopper for chain cable—Continued. Die No.
strongback 3006, 3176–3180, 3218
turnbuckle 3003, 3170–3175
wrench 3007, 3153–3158
Housing, dotter, solenoid 3012

I.

Inner strap, double block 1332–1339

J.

Jack rod eye. (*See* Bolt, eye, collar.)
pin 1475–1477
stud. (*See* Pin, rod, jack.)
Jack start. (*See* Pin, rod, jack.)
Jacking lever for gas engines 3286
jaw for gas engines 3287
wrench (machine, single ended, straight) 3342
Jaw-end, throttle valve stem 1966
for scotch boilers 3230
Joint, universal 2063–2065

K.

Keeper, tub, galley 2066
Key 2067–2079
bolt, Lewis 1558
crosshead, for steamer engine 1916
spring 3270
Knob door 3254, 3383
rail, hand 2082
stanchion 1747–1749

L.

Lacing hook, awning 3038
Ladder, metal:
eye bolt. (*See* Bolt, eye, collar.)
pad 2139, 3260
rung 2160
stanchion 1711

	Die No.
Lag screw for tiller. (*See* Bolt, eye.)	
Lashing hook	1281
Latch for B. & W. boiler casing. (*See* Dog, with spindle.)	
hook	3272
block, snatch	1893–1899, 3316–3318
dog	1625
nose pad for. (*See* Pad, dog, latch.)	
pad for gun-port shutters	2133
handle for B. & W. boiler casing. (*See* Handle, dog.)	
hasp	2083
hook	3272
lever, steamer engines	1919
Launch boiler bushing	3080
cap	3020
Leg brace, bench, mess; end of	1295
table, mess	1293
Legs, bench and table, mess; foot of	1290
table, mess—	
left, head of	1297
right, head of	1288, 1298
Lewis bolt	1556, 1557
key for	1558
Lever, for fire-control equipment	3281
gear, clutch, for fire-control equipment	3279, 3280
latch, steamer engines	1919
jacking for gas engines	3286
jaw for gas engines	3287
plumber's force pump	1918
pump, air, steamer engine	3378
reversing, steamer engine	1920, 3377
steam launch feed pump	1917
stop for fire-control equipment	3282
throttle, for steamer engine	1921–1923
Lifeline, eyebolt	1553
hook	1270, 1271

	Die No.
Lifeline, stanchion—	
center eye	1716
foot	1725
head	1740
shackle	3023
Life rail stanchion head	1738
knob	1748, 1749
Lifter, punt. (*See* Chain plate.)	
Links	2084–2099
bar for steamer engine	3264
block	3244
block, snatch	3211–3214, 3324, 3407
endless chain	2093
fulcrum, valve, throttle, steamer engine	2096–2099
lift and force pump	2086–2088
lift pumps	2091, 2092
plumber's force pump	2090
shell stowage, 14-inch	3048, 3049
sprocket chain	2094, 2095
swivel	1310–1317, 3331
Lock pin for safe in secretary bureau	3248
Locker, foot of	2051
wire; fastener for	2017
wire, mess; hanger for	2059, 2060
Locking bolt	1550–1552
eye, raised water-tight hatch. (*See* Bolt, eye, collar.)	
pin for coal chute (*see* Bolt, locking)	3362
Lower rod for safe locker in secretary bureau	3250
Lubricator support	2187
Lug, collar	2013, 2014
terminal	1425–1430

M.

Machine wrench, double ended (*see* Wrench)	1840–1842
single ended (*see* Wrench)	1843–1859
Machinist clamp	3348
Main sheet band	1971

Die No.
Male gooseneck..... 1471–1474
Male hinge..... 1386–1397, 3069, 3076, 3077, 3271
pad..... 1414–1420, 3073, 3131, 3150, 3309, 3350
Mast, cage; fittings:
bottom—
left hand..... 2033
right hand..... 2034
top—
left hand..... 2035
right hand..... 2036
Mast, traveler; hook..... 2062
Maul, riveting. (*See* Hammer, riveting.)
Mess bench and table fittings. (*See* Fittings.)
brace rod, eye end..... 2032
Metal block, double; strap, outer..... 1348
single; strap..... 1326–1328, 3333
Metal block, snatch:
crosshead..... 3203–3206, 3323, 3405
hasp..... 3207–3210, 3325, 3406
link..... 3211–3214, 3324, 3407
strap..... 3199–3302, 3404
Metal coaling block; pin for..... 2124
single; strap..... 1330, 1331
Mine case clamp..... 2050
Mine fittings (*see* Fittings)..... 2037–2049
Mine, N. D.; eyebolt. (*See* Bolt, eye, collar.)
firing gear shackle for. (*See* Shackle.)
Nippers, rope walk..... 1784–1787
Nose pad. (*See* Dog, flat.)
for latch dog. (*See* Pad, dog, latch.)
Nut, bolt, drop..... 3063
swinging water-tight door. (*See* Nut, octagonal.)
plug, patch, bulkhead..... 2230, 2231
Nuts..... 2100–2114
fire-control equipment..... 3283

Die No.
Nuts, hexagonal 2100
octagonal 2101, 3225
wing 2102–2114, 3386

O.

Outer strap, double block 1340–1347
double metal block 1348
double wood block 1349

P.

Pad, eye 3078
Pad eye, cross 1184–1219
marker buoy 3090
straight 1154–1183
Pads 2129–2141
boat chock 2130, 2131
deck for mess table 3146
dog. (*See* Hinge pad, female.)
for portable ventilators 2132
nose 2141
fire-control tower 2129
guide, for gun-port shutters 2134, 2135
hinge gas engine cover 3291
female 1398–1412, 3120, 3126, 3151, 3198
male 1414–1420, 3073, 3131, 3150, 3309, 3350
nonwater-tight doors, hatches and manholes. (*See* Hinge, male.)
hoisting, for sailing launches and cutters 2136
hook 1563, 2137, 2138
ladder, metal 2139, 3260
latch, dog, for gun port shutters 2133
nose. (*See* Dog, flat.)
rod, stay, used with boat stowage fittings 3027
stanchion 1750
strut, used with boat stowage fittings 3026
Patch plug, bulkhead 2232, 2233
nut for 2230, 2231

Die No.
Pawl..... 2142
Peephole strongback in conning tower..... 2182
Peep sight clamp..... 3351
Pelican hook.....1273, 1277
(for housing chain stopper for chain cable). 3005, 3164–3169, 3219
Pin. (*See* Bolt, eye.)
Pins.....2115–2128
ball head.....2119–2120
belaying.....2121–2123
canopy..... 2125
coaling boom. (*See* Bolt, eye, collar.)
drift..... 1788–1802
eye. (*See* Bolt, eye, collar.)
Havana floating dry dock. (*See* Pin, tapered.)
jack rod..... 1475–1477
lock for safe locker in secretary bureau..... 3248
locking..... 3362
for coal chute. (*See* Bolt, locking)
metal coaling block..... 2124
ridge pole. (*See* Bolt, eye, collar.)
saddle, for steamer engine..... 1924, 1925
square..... 2116
shackle, connecting, chain cable 1705–1710, 3001, 3008, 3009, 3030, 3031, 3036, 3084, 3086, 3096, 3138, 3140, 3142, 3144
swivel..... 3395, 3396
strut. (*See* Bolt, eye, collar.)
tapered..... 2126
thole..... 2127, 2128
thwart..... 3034
toggle. (*See* Bolt, eye, collar.)
Pipe flange..... 1498–1506, 1509–1514, 3099–3122, 3232–3243, 3294–3297, 3111–3122, 3296, 3297, 3389, 3394
hanger clip..... 2009
plug for boiler headers..... 3134
socket..... 2178

	Die No.
Pistol, signal:	
barrel	2234
hammer	2235
trigger	2236
Piston, for circulating engine. (*See* Rod, piston.)	
H. P. for steamer engine	1926–1928
L. P. for steamer engine	1929–1931
rod, steamer engine	1956–1958
rod, with crosshead	1955, 3246
Plain, eyebolt. (*See* Bolt, eye.)	
Plate, chain	2003–2005, 3358
handhole, boiler. (*See* Cover, handhole.)	
handle	2143
face	3194
Plug nut, patch, bulkhead	2230, 2231
Plug patch bulkhead	2232, 2233
pipe for boiler header	3134
socket, pin for. (*See* Pin, ball-head.)	
tube, circulating boiler	1932
Pneumatic cape chisel; shank, octagonal	1759–1761
chisel shank, hexagonal	1752–1756
octagonal	1757
diamond point chisel, octagonal	1762
drill	1776
flat chisel, octagonal	1763–1765
gouging chisel, octagonal	1768
ripping chisel, octagonal	1769
scaling chisel, shank	1771
scaling chisel, square	1770
Port, cargo; dog	1626–1630
Post, rudder for 21-foot motor dory	3303
Projectile cap, 6-inch	2002
A. P., 8-inch	3016–3017
wind shield, 6-inch	2225
Propeller shaft for 33-foot steamer	1960
40-foot steamer	1961
Pudding fender bracket	1995
Pump; crosshead, cap square	1907

Die No.
Pump; crosshead, steam-launch feed 1908
fulcrum 2052
handle 2055–2057, 3378
lever, plumber's, force 1918
lever, steam launch 1917
yoke for steam-launch feed 1909
Pumps, air; eccentric rod for steamer engine 1951–1954
lever for, for steamer engine 3378
handy-billy; bolt for air chamber. (*See* Bolt, drop.)
Punch 1803, 1804
backing out, rivet 1805–1810
Punt lifter. (*See* Chain plate.)
Punt rowlock 2151
socket 2156

Q.

Quadrant, steamer engine 1933–1937
throttle, steamer engine 1938–1941

R.

Racing cutter, rowlock 2150
socket 2155
rudder brace 1991
Racks, towel, bracket 1996, 1997
tip, arm 2190
Rail, clip for 2010, 2011, 3380, 3391
hand, knob 2082
pad, hand. (*See* Foot, stanchion.)
stanchion, head. (*See* Bolt, eye.)
shackle 3023
Reversing arm lever for steamer engine . 1900, 1901, 3263, 3377
Ridgepole pin. (*See* Bolt, eye, collar.)
Rigging screw, bolt 1564–1568
shackle 1700–1704
swivel shackle 2169–2173
pin 3395, 3396
turnbuckle sleeve 2210–2214

Die No.
Rings..... 3305–3308, 3363–3365
clinch, swivel, chain..... 1988
mine-sweep kite..... 3097, 3098, 3190, 3191
telegraph, automatic..... 2229
Ripping chisel, octagonal..... 1769
Rivet backing-out punch..... 1805–1810
set..... 1811–1825
tap..... 1431–1470
tongs..... 1338, 1839
Riveter, compression, die for. (*See* Set, rivet.)
Riveting hammer..... 1778–1781
Riveting maul. (*See* Hammer, riveting.)
Rocker, spray, for submarine engine..... 3292
Rods, connecting—
cutter engine..... 3245
gasoline engine..... 1942, 1943
steamer engine..... 1946, 1947
blower..... 3372
circulating..... 3373
eccentric—
ahead, for cutter engine..... 3256
astern, for cutter engine..... 3257
head of, steamer engine..... 1949, 1950
pump, air, steamer..... 1950, 1951, 1954
steamer engine..... 1947, 1948
end of..... 2145
grab..... 1483, 1489, 1492
support..... 2053, 2054
guide for safe locker in secretary bureau..... 3251, 3252
jaw end..... 2144, 2146, 2148, 3230
lower, for safe locker in secretary bureau..... 3250
piston—
steamer engine..... 1956–1958
with crosshead..... 1955, 3246
engine blower..... 3374
stay, boat chocks. (*See* Bolt, drop.)
stop for safe locker in secretary bureau..... 3253
suspension..... 3265
upper, for safe locker in secretary bureau..... 3249

Die No.
Ropewalk nippers..... 1784–1787
Rowlock sockets..... 2155–2159
cutter, 24-foot..... 2158
dinghy, punt, and dories..... 2156
racing cutter..... 2155
steamer..... 2157
whaleboat..... 2158
wherry..... 2159
Rowlocks..... 2149–2154
cutter, 24-foot..... 2153
dinghy, punt, and dories..... 2151
electric cutter..... 2149
racing cutter..... 2150
steamer..... 2152
whaleboat..... 2153
wherry..... 2154
Rudder bearing for 21-foot motor dory..... 3302
brace, cutter..... 1989, 1990
dinghy and wherry..... 1992
racing cutter..... 1991
sailing launch..... 1993
whaleboat..... 1994
Rudder gudgeon. (*See* Bolt, drop.)
post..... 3303
Rung, ladder..... 2160

S.

Saddle pin, for steamer engine..... 1924, 1925
Sailing launch bowsprit, inner end..... 1984
outer end..... 1985
rudder brace..... 1993
Scaling chisel, shank of..... 1771
square..... 1770
Screw bolt, rigging..... 1564, 1568
Screw eye. (*See* Bolt, eye.)
Screw pin, for metal coaling block. (*See* Pin, block, coaling.)

Die No.
Screws, clamping 2166
rigging, swivel shackle for 2169–2173
thumb 2167
Seaplane, eyebolt for 3129
Securing bolt 1559–1561
Segment, commutator 2161–2165, 3015
Set, rivet 1811–1825
yoke riveter. (*See* Set, rivet.)
Shackle end. (*See* Rod, jaw, end.)
Shackle pin, connecting, chain cable 1705–1710
3001, 3008, 3009, 3036, 3084, 3096,
3138, 3140, 3142, 3144, 3400, 3402
screw, rigging 3395, 3396
Shackles 1645–1682,
3298, 3326, 3366–3368, 3382
awning, rail and life line stanchion 3023
bending, chain cable 1686, 1687, 1695, 3040
block, coaling 1688, 1689
connecting 1683–1685
chain cable 1690–1694,
3000, 3010, 3011, 3028, 3029, 3035, 3083, 3085,
3095, 3137, 3139, 3141, 3143
hoisting, boat 1696–1699, 3387
screw, rigging 1700–1704
pin 3395, 3396
swivel 3302
for rigging screw 2169, 2173
Shaft coupling, steam cutter. (*See* Shaft, propeller.)
engine, blower, for steamer engine 3374
engine, circulating, for steamer engine. 3375
crank, gasoline engines 1959
propeller, for 33-foot steamer 1960
for 40-foot steamer 1961
Shank, chisel, hexagonal 1752, 1756
octagonal 1757
scaling 1771
Sheave, telegraph, automatic 2228, 3124

Die No.

Shearing coupling, blank for, mine sweep gear 3091
Sheet, main, band 1971
Shell clip 2012
extractor 3220, 3284, 3289
stowage wedge 2223, 2224
Shipfitter's hammer 1782
wrench. (*See* Wrench, spud.)
Shipwright's dog 1632–1634
Shouldered eyebolt. (*See* Bolt, eye, collar.)
Shroud eye. (*See* Bolt, eye, collar.)
Side strap for ammunition trolley 2186
Sight, peep, clamp 3351
Signal pistol, barrel 2234
hammer 2235
trigger 2236
Single block strap 1318–1325
hook. (*See* Hook, single, side.)
metal coaling block strap 1330, 1331
block strap 1326–1328, 3333
wood block strap 1329
Sister hook 1250–1266, 3346
Sleeve, half, bolt, armor 1421–1424
turnbuckle, screw, rigging 2210–2214
Slice bar, point 1751
Snatch block, cheek and strap 3379
crosshead 1357–1363, 3203–3206, 3276, 3311, 3312, 3323, 3405
hasp 1364–1369, 3207–3210, 3313–3315, 3325, 3406
hook. (*See* Hook, swivel.)
latch 1893–1899, 3316–3318
link 3211–3214, 3324, 3407
strap 1350–1356, 3199–3202, 3304, 3319–3322
Socket, arm, rack, towel 2174
bar, handle, for handy billy pump 2175
batten 2176, 2177

Die No.

Socket, dog 3067
pipe 2178
rowlock 2155–2159
cutter, 24-foot 2158
dinghy, punt and dory 2156
racing cutter 2155
steamer 2157
whaleboat 2158
wherry 2159
wrench 1861–1865
air hose 1863
air ports 1862
coal scuttles 1864, 1865
Solenoid dotter housing 3012
Soot door, dog and bolt hatch. (*See* Dog, with spindle.)
latch, dog for. (*See* Handle, dog.)
wrench for. (*See* Handle, dog.)
Sounding tube flange 1508
Spanner N. D. mine firing gear. (*See* Wrench, machine single-ended.)
Spanner and wrench, combination 1860
Spanner wrench, hose 1872–1875
fire 1874
suction 1875
Spindle bolt, for boiler handhole covers 1983
Spray rocker for submarine engines (class S) 3292
Spring key 3270
Spud wrench 1876–1892
Square pin 2116
Stanchion band 1713, 1714
center eye, life line 1716
end for torpedo boats. (*See* Foot, stanchion; also Rod, jaw end.)
eye, awning, for small boats 3047
foot 1718–1733
head 1734–1746, 3352
awning 1741, 1742, 1871

	Die No.
Stanchion, head, guard line	1735
life line	1740
rail	1738–1739
hook band, awning	1712
knob	1747–1749
life rail	1748, 1749
ladder	1711
pad	1750
shackle; awning, rail and life line	3023
yoke, valve	1531–1549
Staple, blocking, dry dock	2180
hook, door	2179
Stay rod, for boat chocks. (*See* Bolt, drop.)	
pad; used with boat stowage fittings	3027
yoke, boiler	1969
Steam launch feed pump yoke	1909
Steamer engine piston, H. P	1926, 1928
rowlock	2152
socket	2157
Stem, valve, throttle, steamer engine	1963–1965
jaw end	1966
Stem, valve, with crosshead	1962
Stop, blade; female—	
left-hand	1826, 1830
right-hand	1827, 1831
male—	
left-hand	1828, 1832
right-hand	1829, 1833
lever for fire-control equipment	3282
rod for safe locker in secretary bureau	3253
training for fire-control equipment	3285
Stowage box, dog for. (*See* Dog, handled.)	
Strainer for H. P. fitting	3273
Straight grab	1490, 1491
pad eye	1154–1183
angle valve, H. P	2217
Strap and cheek, block, snatch	3379

Die No.
Strap, block, single 1318–1325
metal 1326–1328, 3333
metal, coaling 1330, 1331
wood 1329
snatch 1350–1356, 3199–3202, 3304, 3319–3322
crank, end, for deck winch 1967
inner, block, double 1332–1339
outer, block, double 1340–1347
metal, double 1348
wood, double 1349
Strap, metal hose, rack. (*See* Hinge, female.)
side for ammunition trolley 2186
Strongback 2181–2185
coal scuttle 2183–2185
hoe, cleaning, ash 1834
fire 1835, 1836
housing chain stopper 3066, 3123, 3176–3180, 3218
peephole in conning tower 2182
Strut, block, thrust for cutter engine 3247
Strut jaw, lower, boat chocks. (*See* Rod, jaw end.)
upper, boat chocks. (*See* Rod, jaw end.)
pad, used with boat stowage fittings 3026
pin. (*See* Bolt, eye, collar.)
Stud, chain 1449–1470, 3032, 3033
jack rod. (*See* Pin, rod, jack.)
Suction hose, spanner wrench for 1875
Support, hinge, berth 3197
lubricator 2187
rod, grab 2053, 2054
Suspension link. (*See* Link.)
for valve gear. (*See* Link.)
rod 3265
Swivel box 3041–3043
chain cable 1986, 1987, 3039, 3050–3054, 3088, 3093
chain, clinch ring 1988
eye 2027, 2028, 3044–3046

Die No.
Swivel box, eye, mooring 3216
for coaling block. (*See* Bolt, eye, collar.)
for coaling boom. (*See* Bolt, eye, collar.)
hook 1237–1249, 3310, 3329
link 1310–1317, 3331
mooring 3215
shackle 3022
for rigging screw 2169–2173

T.

T-handle, door 3384
T-wrench 1866
handle of 1870
Table, mess, fittings (*see* Fittings)
Tap rivet 1431–1470
wrench 1867–1869
Tapered pin 2126
Tarpaulin hook 1285–1287
Tee, H. P 2189, 3222, 3228
Telegraph, automatic:
dog 2226, 2227
ring 2229
sheave 2228, 3124
Terminal lug 1425–1430
Test-plug wrench and spanner, combination 1860
Thimble strap (*see* Strap, block, double, inner). 3369–3371, 3385
Thole pin 2127, 2128
Throttle lever, for steamer engine 1921–1923
quadrant, steamer engine 1938–1941
valve fulcrum link, for steamer engine ... 2096–2099
valve quadrant. (*See* Quadrant, throttle.)
valve stem, jaw end for steamer engine 1966
steamer engine 1963–1965
Thumbscrew 2167
Thwart pin 3034
Tie rod, end for. (*See* Rod, end.)

Die No.
Tiller for 21-foot motor dory..... 3277
Tiller lag screw. (*See* Bolt, eye.)
Tip, arm, towel rack..... 2190
Toggle..... 2191–2207
bolt. (*See* Bolt, eye, collar.)
pin. (*See* Bolt, eye, collar.)
Tongs, rivet..... 1838–1839
Torpedo boat lifeline hook. (*See* Hook, lifeline.)
Towel rack arm—
socket..... 2174
tip..... 2190
bracket..... 1996, 1997
pin. (*See* Pin, ball head.)
Towing gear connecting shackle—
for battle ships..... 1685
for destroyers..... 1683
shackle for. (*See* Shackle, connecting.)
Track bolt..... 1554
Traveler boom band..... 1972
hook..... 2062
Trigger, signal pistol..... 2236
Trolley hook, ammunition..... 1278
Tube, boiler, cap..... 1906
circulating; plug..... 1932
clamp..... 3081, 3082
escape, air, flange..... 1508
sounding, flange..... 1508
Turnbuckle eyes. (*See* Bolt, eye.)
sleeve, rigging screw..... 2210–2214
Turnbuckles..... 2208, 2209, 3024, 3349
for housing chain stopper for chain cable. 3003, 3170–3175

U.

Universal joint..... 2063–2065
Upper rod for safe locker in secretary bureau..... 3249

V. Die No.

Valve handle, butterfly 1497
Valve, angle 3231
H. P 3336
by-pass (right and left hand) 3266
cross H. P 3334
fuel check 3258
globe H. P 3335
H. P 2215, 2216
handle for 3337
Valve, stem, end for, cutter engines. (*See* Bolt, drop.)
lower, engine. (*See* Stem, valve.)
throttle—
jaw end, for steamer engine 1966
steamer engine 1963–1965
with cross head 1962
straightaway 2217
Valve, yoke 1515–1530, 3388
Vent cowl rod, end for. (*See* Rod, jaw end.)
outlet damper handle 3290
turning gear, handle. (*See* Bolt, drop.)
Ventilation pipe valve handle 1497
terminal damper handle 3301
Vents, gas, for battery box 1968
Very signal pistol fittings. (*See* Signal pistol.)

W.

Ward boiler tube cap. (*See* Cap, tube, boiler.)
Washers boat shop crane 2218
Water connection, cooling for engine exhaust valves. (*See* Valve, straightaway.)
Wedges, curved 2081
stowage, shell 2223, 2224
water-tight doors 2080
swinging door. (*See* Key.)
Whaleboat, rowlock 2153
socket 2158
rudder brace 1994
Wherry rowlock 2154
socket 2159

Die No.
Wherry and dinghy rudder brace..... 1992
Winch, deck, crank strap; end of..... 1967
Windshield, projectile, 6-inch..... 2225
Wing nuts..... 2102–2114, 3386
Wire locker fastener..... 2017
Wood block, double; strap, outer..... 1349
single; strap..... 1329
snatch; strap..... 3319–3322
Wrench coupling..... 3343
Wrench and spanner, combination..... 1860
Wrench, elevating gear for interconnecting clutch..... 3262
engineer's 15° angle. (*See* Wrench, machine, single ended.)
handle, socket and T..... 1870
housing chain stopper..... 3007, 3153–3158
machine—
double ended, 30°..... 1840
double ended, straight..... 1841, 1842
single ended, 15°..... 1844, 1845, 1847–1850, 1852–1858, 3339, 3340
single ended, 45°..... 1851
single ended, 60°..... 1843, 1846
single ended, straight..... 1859, 3341
jacking..... 3342
socket..... 1861–1865
spanner used with 4-inch mount..... 3189
spanner, hose..... 1872–1875
spud..... 1876–1892
T..... 1866
tap..... 1867–1869
for soot doors. (*See* Handle, dog.)
throttle sector..... 3344

Y.

Yoke riveter, set for..... 1814
Yoke, pump..... 1909
stanchion, valve..... 1531–1549
stay, boiler..... 1569
valve..... 1515–1530, 3388

BOSTON NAVY YARD.

Yard No.	New No.	Yard No.	New No.	Yard No.	New No.	Yard No.	New No.
1	1085	40	1638	78	1271	110	1131
2	1024	41	1616	79	1553	111	1020
3	1145	42	1365	80	1240	112	1036
5	1780	43	1281	81	1351	113	1038
6	1782	44	1190	82	1407	114	1394
7	1779	45	1049	83	1377	115	1246
8	1477	46	1882	84	1606	116	1399
9	1062	48	1722	85	1392	117	1388
10	1063	49	2240	86	2031	118	1370
11	1884	50	1221	87	1385	119	1356
12	1047	51	1224	88	1280	120	1242
13	1056	52	1254	90	1155	121	1743
14	1058	53	1627	92	1159	122	1588
15	1032	54	1267	93	1163	124	1401
16	1040	55	1895	94	1165	125	1409
17	1717	57	1604	96	1168	126	1611
18	1119	58	1894	97	1396	127	1582
19	1026	59	1352	98	1023	128	1594
20	1030	60	1614	99	1053	129	1561
22	1487	61	1635		2199	130	1637
23	1476	62	1491	100	1789	131	1382
24	1110	63	1357		1794	132	2212
25	1975	64	1077		1795	133	2214
26	2060	65	1241		1797	134	2171
27	1017	66	1359	101	1761	135	1275
28	2059	67	1373		1762	136	1702
29	1009	68	1414	102	1764	137	2171
30	1126	69	2051	103	1768	138	1704
31	1715	70	1361		1769	139	2173
32	1006	71	1362	104	1068	140	1277
33	1653	72	1360	105	2174	141	1566
34	1734	73	1353		2190	142	1568
36	2181	74	1353	106	1757	143	2173
37	1135	75	1366	107	1997	144	1787
38	2128	76	2004	108	2137	145	1784
39	1873	77	1351	109	2030	146	1634

BOSTON NAVY YARD—Continued.

Yard No.	New No.	Yard No.	New No.	Yard No.	New No.	Yard No.	New No.
147	1223	183	1898	221	2027	278	1461
148	1282	184	1244	222	1690	279	1462
149	1356	185	1354	223	1705	280	1463
150	2180	186	1243	225	1691	281	1464
151	1118	187	1897	227	1706	282	1465
152	2118	188	1367	233	1986	283	1466
153	1593	189	1364	240	1272	284	1467
154	1899	192	1350	246	1694	285	1468
155	1369	193	1893	247	1710	286	1469
156	1102	194	1239	248	1907	287	1470
157	2132	195	1701	249	1917	302	1236
158	1043	196	1564	250	1908	303	1683
159	1786	197	1273	252	1860	313	1695
160	1785	198	1276	256	1988	314	1686
161	1116	199	2210	257	2074	315	1687
162	1299	200	2211		2142	316	1978
163	1417	201	2169	258	1693	317	1977
164	1160	202	2213	259	1709	318	1684
165	1291	203	2213	260	1674	319	1685
166	2147	204	1703	261	1708	320	1630
167	1410	205	1276	262	1707	326	1296
168	1380	206	1565	263	2160	329	1620
169	2148	207	1567	264	1555	331	1662
170	1257	208	1700	265	1692	332	1044
171	1253	209	2170	266	1450	333	1479
172	1358	210	2172	267	1449	334	1228
173	1225	211	2172	268	1451	335	2061
174	1255	212	1274	269	1452	336	1199
175	1259	213	1678	270	1453	373	1432
176	1355	214	1698	271	1454	374	1434
177	1260	215	1008	272	1455	375	1437
178	1226	216	1551	273	1456	376	1442
179	1261	217	1556	274	1457		1445
180	1355	218	1909	275	1458	530	1981
181	1368	219	1987	276	1459	538	2225
182	1354	220	2008	277	1460	539	2002

MARE ISLAND NAVY YARD.

Yard No.	New No.	Yard No.	New No.	Yard No.	New No.	Yard No.	New No.
1-1	1024	3-2	1481	3-47	1650	4-24	1394
1-2	1025	3-3	1005	3-48	1279	4-27	2056
1-3	1029	3-4	1010	3-50	1087	4-28	1291
1-4	1031	3-5	1016	3-55	2207	4-31	1160
1-5	1041	3-6	2059	3-59	1573	4-32	1299
1-6	1044	3-7	2060	3-60	1577	4-34	1287
1-7	1046	3-8	1267	3-61	1580	4-35	2029
1-8	1049	3-9	1281	3-62	2105	4-36	1139
1-9	1057	3-17	1562	3-63	2108	4-37	1719
1-10	1059	3-18	1035	3-65	1007	4-38	1741
1-11	1060	3-19	1052	3-66	2232	4-39	1727
1-12	1064	3-20	1067	3-67	2233	4-40	1712
1-13	1068	3-21	1074	3-68	2230	4-41	1726
1-15	1070	3-22	2193	3-69	2231	4-44	1862
1-19	1076	3-23	2195	3-72	2011	4-45	1511
1-23	1083	3-24	2200	4-1	1582	4-48	1289
1-27	1092	3-25	2202	4-3	1588	4-50	1514
1-32	1098	3-26	2203	4-4	1391	4-60	1735
1-36	1100	3-27	1283	4-5	1490	4-61	1596
1-40	1101	3-28	2179	4-6	1381	4-62	2176
2-1	1154	3-31	1744	4-7	1606	4-63	1406
2-2	1155	3-32	1729	4-8	1130	4-64	1609
2-3	1157	3-33	2031	4-9	2137	4-65	2032
2-4	1159	3-34	2175	4-10	1417	5-1	1318
2-9	1163	3-35	1002	4-11	1618	5-2	1332
2-10	1165	3-36	1745	4-12	1638	5-3	1340
2-11	1166	3-37	1731	4-14	1381	5-4	1319
2-12	1169	3-38	1550	4-15	1420	5-5	1333
2-16	1196	3-39	2069	4-16	1559	5-6	1341
2-20	1195	3-40	1990	4-17	1560	5-7	1320
2-28	1202	3-42	1386	4-18	2184	5-8	1334
2-32	1201	3-43	1374	4-20	1594	5-9	1342
2-40	1208	3-44	1471	4-21	1408	5-10	1321
2-68	1217	3-45	1474	4-22	1866	5-11	1335
3-1	2239	3-46	2127	4-23	1865	5-12	1343

MARE ISLAND NAVY YARD—Continued.

Yard No.	New No.	Yard No.	New No.	Yard No.	New No.	Yard No.	New No.
5–13	1322	5–64	1240	6–17	1133	7–57	1923
5–14	1336	5–65	1241	6–22	1141	7–58	1965
5–15	1344	5–66	1242	6–26	1144	7–59	1941
5–16	1323	5–67	1243	6–28	1149	7–60	2099
5–17	1337	5–68	1244	6–29	1150	7–61	1928
5–18	1345	5–69	1245	6–30	1151	7–62	1931
5–19	1323	5–70	1246	6–32	1152	7–63	1948
5–20	1323	5–74	1237	6–34	1153	7–64	1901
5–21	1324	5–82	1351	6–56	1137	7–65	2089
5–22	1338	5–83	1358	6–57	1147	7–66	1925
5–23	1346	5–84	1365	7–1	1921	7–67	1958
5–25	1339	5–85	1895	7–2	1963	7–68	1946
5–26	1347	5–90	1353	7–3	1939	7–69	1590
5–27	1325	5–91	1359	7–4	2098	7–70	1572
5–28	1221	5–92	1366	7–5	1926	7–71	1953
5–29	1250	5–98	1355	7–6	1929	7–72	1937
5–30	1222	5–99	1361	7–7	1956	7–73	2227
5–31	1253	5–100	1368	7–8	1945	7–74	2228
5–32	1224	5–101	1898	7–9	1933	9–1	1753
5–33	1257	5–106	1356	7–21	1922	9–2	1820
5–34	1225	5–107	1362	7–22	1964	9–4	1818
5–35	1255	5–108	1369	7–23	1940	9–5	1810
5–36	1259	5–109	1899	7–24	2097	9–6	1812
5–37	1226	5–115	1363	7–25	1927	9–7	1814
5–38	1227	5–142	1689	7–26	1930	9–11	1766
5–39	1260	6–1	1106	7–27	1957		1767
5–40	1229	6–2	1108	7–28	1944	9–12	1758
5–44	1231	6–3	1109	7–29	1935	9–13	1817
5–45	1263	6–6	1112	7–42	1584	9–14	1817
5–47	1233	6–7	1120	7–43	1947	9–15	1809
5–48	1266	6–8	1115	7–44	2085	9–16	1807
5–49	1312	6–11	1124	7–45	1924	9–17	1633
5–50	1313	6–14	1125	7–46	1952	9–18	1792
5–52	1314	6–15	1128	7–47	1570	9–19	1793
5–63	1239	6–16	1132	7–48	1900	9–20	1796

MARE ISLAND NAVY YARD—Continued.

Yard No.	New No.	Yard No.	New No.	Yard No.	New No.	Yard No.	New No.
9–21	1798	9–33	1886	12–1	1913	12–8	1494
9–22	1799	9–34	1887	12–2	1911	12–13	1751
9–23	1800	9–35	1889	12–3	1905	12–14	1969
9–24	1801	9–42	1754	12–4	1902	12–15	1906
9–25	1839	11–1	1915	12–5	1936		
9–26	1781	11–2	1914	12–6	1601		
9–31	1880	11–3	1968	12–7	2112		

NEW YORK NAVY YARD.

Yard No.	New No.	Yard No.	New No.	Yard No.	New No.	Yard No.	New No.
1	1288	32	1098	69	1624	107	2057
2	1300	33	1118	70	1631	108	1372
3	1037	34	1123	71	1626	109	2055
4	1028	35	1129	72	1617	110	1865
5	1045	36	1138	73	1632	111	2239
6	1297	37	1142	74	1629	112	1479
7	1292	38	1146	75	1612	113	1864
8–1	1290	39	1010	76	1614	114	1853
8–2	1292	40	1015	77	1605	115	1866
9	2119		2194	78	1640	116	1485
10	2125	41	1281	79	1623	117	1488
11	1000	42	1586	80	1618	117–A	1492
12	1004	43	1578	81	1154	118	2012
13	2001	46	1127	84	1159	119	1490
14	2080	47	1130	85	1184	120	2059
15	2081	48	1051	87	1569	122	1365
17–1	1024		2197	88–1	1005	124	1394
17–2	1025	49	1588	88–8	1187	125	1380
18	1113	50	1583	89	1163	126	1383
19–3	1029	51	1585	90	1165	127	1391
19–4	1031	52	1589	91	1166	128	1417
20–5	1041	53	1587	93	2060	129	1377
20–6	1044	54	1036	93–13	1189	130	1378
21–7	1046	55	1973	95	1194	131	1418
21–8	1049	56	1594	96	1048	132	1416
22	1057	57	2168	97	1161	133	1407
23	1059	58	1611	98	2029	134	1285
24	1068	59	1604	99	2052	135	1286
25	1069	60	1622	100	1508	136	1241
26	1078	61	1770	101	1778	137	1242
27	1075	62	1756	102	1777	138	1243
28	1081	63	1755	103	1783	139	1244
29	1084	64	1760	104	1497	140	1284
30	1094	64–A	1765	105	1390	141	1267
31	1096	67	1360	106	1638	142	1563

NEW YORK NAVY YARD—Continued.

Yard No.	New No.	Yard No.	New No.	Yard No.	New No.	Yard No.	New No.
143	1221	179	2087	203	1666	238	2185
144	1222	180	2091	204	1871	239	1635
145	1224	181	2090	205	2144	240	2208
146	1225	182	2095	206	1718	241	1352
147	1226	183	2094	207	2182	243	1354
148	1228	184	1073	208	1749	244	1851
149	1230	185	2126	209	1148	245	2174
150	1232	186	2123	210	1139	246	1996
151	1234	187-1	1792	211	1739	247	2120
152	1250	187-2	1793	212	1723	248	2003
153	1253	187-3	1796	213	1340	249	1732
154	1256	187-4	1798	214	1341	250	1746
155	1220	187-5	1799	215	1342	251	1730
156	1258	187-6	1800	216	1343	252	1745
157	1259	188	1801	217	1344	253	1729
158	1260	189	2127	218	1345	254	1744
159	1262	190	1054	219	1346	255	1621
160	1265		2198	220	1347	256	1171
161	1264	191	1001	221	1318	257	1172
162	1240		2191	222	1319	258	1173
163	1261	192	1066	223	1320	259	1174
164	1251		2201	224	1321	260	1175
165	1252	193	2204	225	1322	261	1176
166	2076	194	1080	226	1323	262	1177
167	2068		2205	227	1324	263	1179
168	1229	195	1816	228	1325	264	1180
170	1897	195-20	1824	229	1332	265	1183
171	1802	196	1822	230	1333	266	1215
172	1239	197	1819	231	1334	268	2131
173	1918	198-11	1823	232	1335	269	2130
174	1235	198-12	1823	233	1336	270	1419
175	2093	199	1804	234	1337	271	1403
176	2088	200	2054	235	1338	272	1405
177	2086	201	1825	236	1339	273	2053
178	2092	202	1813	237	2183	274	2141

NEW YORK NAVY YARD—Continued.

Yard No.	New No.	Yard No.	New No.	Yard No.	New No.	Yard No.	New No.
275	2133	315	1441	352	1625	395	1552
276	1398	316	1430	353	2134	396	1022
277	1603	317	1429	354	2135	397	2014
278	2178	318	1428	355	1402	398	2013
279	1421	319	1427	355-A	1404	400	1387
281	1423	320	1426	356	2138	401	1371
282	1995	321	1425	357	1400	402	1107
283	2009	322	1867	358	1415	403	1838
284	2100	323	1869	359	1376	404	1412
285	2111	324	1447	360-1	2115	405	1393
287	1578	325	1439	360-2	2117	408	1970
288	1598	326	1444	361	1716	412	1596
289	2147	327	1438	362	1269	413	2000
290	1475	328	1435	363	1411	414	2175
291	2148	329	1433	364	1725	415	1289
292	1776	330	1436	365	1726	416	1278
293	2218	331	1431	366	1728	417	2186
295	1608	332	1446	367	2006	418	2116
296	1607	333	1448	369	2007	419	1974
297	2164	334	1443	370	2008	420	1034
298	2165	335	1509	371	1064		2196
299	2209	336	1510	372	1071	421	2206
300	2161	337	1511	373	1076		1088
301	2162	338	1512	378	1982	422	2234
302	2146	339	1513	379	2016	423	1554
303	1299	340	1348	380	1558	424	1980
304	1114	341	1327	382	2189	425	1979
305	2109	342	1385	383	2015	426	1560
306	2107	343	1397	384	2215	427	1559
307	2114	344	1557	385	2216	428	1582
308	2103	345	1661	386	1496	429	1592
309	2102	346	2163	387	1863	429-A	1591
310	1375	347	1422	388	2058	430	1597
311	1389	348	1421	392	2188	430-A	1595
314	1440	349	1740	394	1089	434	1647

NEW YORK NAVY YARD—Continued.

Yard No.	New No.	Yard No.	New No.	Yard No.	New No.	Yard No.	New No.
435	1652	479	2101	521	1316	1017	1841
437	1656	480	1331	522	1245	1018	1840
438	1658	481	1736	523	1238	1019	1843
439	1659	482	1750	524	1311	1020	1846
441	2176	483	1713	532	1303	1021	2082
442	2177	484	1714	533	1304	1022	1721
443	1663	485	2129	534	1305	1023	1720
445	1667	486–2	2017	535	1307	1024	1737
447	1672	489	2063	536	1308	1025	1711
449	1675	494	2223	537	1309	1026	1747
451	1681	495	2224	538	1742	1027	1105
454	1011	497	1733	553	3248	1028	1014
	2192	498	1498	554	3249	1029	1033
455	1018	499	1499	554	3250	1030	1050
456	1699	500	1500	555	3251	1031	1065
457	1003	501	1501	556	3252	1032	1072
459	2158	502	1502	557	3253	1033	1079
460	2153	503	1503	558	3254	1034	1086
461	2155	504	1504	559	3255	1035	1093
462	2150	505	1507	1000	2084	1036	1095
463	2159	506	1505	1001	1916	1052	1027
464	2154	507	1506	1002	1954	1053	1019
465	2151	508	1270	1003	1949	1054	2113
466	2156	509	2083	1004	2089	1055	2067
467	2149	510	2140	1005	1901		2070
468	2157	511	2124	1006	1950		2071
469	2152	512	1994	1007	1938		2073
470	1849	513	1992	1008	2096	1056	2075
471	1850	514	1574	1009	1590	1057	1494
472	1852	515	1991	1010	1925	1059	1515
473	1854	516	2139	1011	1953	1060	1516
474	1857	517	1312	1012	1966	1061	1517
475	1868	518	1313	1013	1920	1062	1518
476	1759	519	1314	1015	1951	1063	1519
477	1763	520	1315	1016	1842	1064	1520

NEW YORK NAVY YARD—Continued.

Yard No.	New No.	Yard No.	New No.	Yard No.	New No.	Yard No.	New No.
1065	1521	1089–2	1546	1126	1983	1145	3229
1066	1522	1090	1547	1127–1	2226	1146	3230
1067	1523	1091	1548	1127–2	2229	1147	3231
1068	1524	1092	1549	1128	1642	1148	3274
1069	1525	1098	1936	1129	1600	1149	3332
1070	1526	1099	1934	1130	1751	1150	3233
1071	1527	1100	2085	1131	1836	1151	3234
1072	1528	1101	1570	1132	1835	1152	3235
1073	1529	1103	1900	1133	1834	1153	3236
1074	1530	1104	1947	1134	1837	1154	3237
1082–1	1531	1107	1919	1135–1	1827	1155	3238
1082–2	1532	1109	1941	1135–2	1826	1156	3239
1083–1	1533	1112	2098	1135–3	1829	1157	3240
1083–2	1534	1113	2097	1135–4	1828	1158	3241
1084–1	1535	1114	1937	1136–1	1831	1160	3242
1084–2	1536	1115	1955	1136–2	1830	1162	3243
1085–1	1537	1116	1772	1136–3	1833	1169	3244
1085–2	1538	1117	1773	1136–4	1832	1171	3256
1086–1	1539	1118	1774	1137	1495		3257
1086–2	1540	1119	1775	1138	1998	1172	3245
1087–1	1541	1121	1962	1139	2217	1173	3245
1087–2	1542	1122	1602	1140	3226	1174	3247
1088–1	1543	1123	1636	1141	3227		
1088–2	1544	1124	2235	1142	3228		
1089–1	1545	1125	2236	1143	3273		

NORFOLK NAVY YARD.

Yard No.	New No.	Yard No.	New No.	Yard No.	New No.	Yard No.	New No.
1–1	1024	2–8	1187	2–57	1181	3–29	1483
1–2	1025	2–9	1163	2–58	1182	3–30	1484
1–3	1029	2–10	1165	2–60	1183	3–31	1486
1–4	1031	2–11	1166	2–61	1214	3–32	1489
1–5	1041	2–12	1168	2–64	1218	3–33	1870
1–6	1044	2–13	1189	2–65	1215	3–34	2018
1–7	1046	2–14	1192	2–66	1216	3–35	2019
1–8	1049	2–16	1196	2–68	1217	3–36	2020
1–9	1057	2–17	1188	2–69	1219	3–37	2021
1–10	1059	2–18	1191	3–1	1482	3–38	2022
1–11	1060	2–19	1193	3–2	1478	3–39	2023
1–12	1064	2–20	1195	3–3	1005	3–40	2024
1–13	1068	2–21	1171	3–4	1010	3–41	2025
1–15	1070	2–23	1172	3–5	1016	3–42	2023
1–17	1075	2–24	1173	3–6	2059	3–43	2026
1–20	1078	2–25	1198	3–7	2060	3–44	2238
1–22	1082	2–28	1202	3–9	1281	3–45	2237
1–24	1084	2–29	1197	3–10	1628	3–47	1985
1–26	1091	2–31	1200	3–11	1550	3–48	1984
1–28	1094	2–32	1201	3–12	1021	3–49	1413
1–30	1097	2–33	1174	3–13	1039	3–50	1087
1–33	1099	2–36	1176	3–14	1055	3–51	2207
1–36	1100	2–37	1204	3–16	1619	3–52	2072
1–40	1101	2–40	1206	3–17	1639	3–53	2077
1–42	1103	2–41	1203	3–18	1035	3–54	2078
1–45	1104	2–43	1205	3–19	1052	3–55	2079
1–60	1690	2–44	1207	3–20	1067	3–56	1643
1–61	1042	2–45	1177	3–21	1074	3–57	1613
2–1	1154	2–46	1178	3–22	2193	3–58	1268
2–2	1155	2–48	1180	3–23	2195	3–60	1751
2–3	1157	2–49	1210	3–24	2200	3–68	1960
2–4	1159	2–52	1213	3–25	2202	3–69	1961
2–5	1184	2–53	1209	3–26	2203	3–70	2145
2–6	1185	2–54	1211	3–27	1283	3–71	1910
2–7	1186	2–56	1212	3–28	2179	3–72	2112

NORFOLK NAVY YARD—Continued.

Yard No.	New No.	Yard No.	New No.	Yard No.	New No.	Yard No.	New No.
3–73	1602	3–114	2045	4–29	1298	5–27	1325
3–74	1636	3–115	2042	4–30	1290	5–28	1221
3–75	1395	3–116	2039	4–31	1160	5–29	1250
3–76	2122	3–118	2038	4–32	1299	5–30	1222
3–77	2050	3–119	2037	4–33	1289	5–31	1253
3–78	2036	3–121	2044	4–34	2136	5–32	1224
3–79	2035	3–122	2043	4–35	1989	5–33	1257
3–80	2034	3–123	2046	4–36	1292	5–34	1225
3–81	2033	3–126	2040	4–37	1294	5–35	1255
3–82	1903	3–127	2049	4–38	1571	5–36	1259
3–83	1912	3–128	2143	4–39	1576	5–37	1226
3–84	1904	3–129	1493	4–40	1575	5–38	1227
3–85	1932	3–130	1859	5–1	1318	5–39	1260
3–86	1967	3–131	2047	5–2	1332	5–40	1229
3–87	2010	4–1	1581	5–3	1340	5–41	1261
3–88	2187	4–2	1604	5–4	1319	5–42	1230
3–89	1942	4–3	1589	5–5	1333	5–43	1262
3–90	1976	4–4	1391	5–6	1341	5–44	1231
3–91	1959	4–5	1491	5–7	1320	5–45	1263
3–92	1738	4–6	1380	5–8	1334	5–47	1233
	1748	4–7	1606	5–9	1342	5–48	1266
3–93	1724	4–8	1130	5–10	1321	5–55	1317
3–94	1270	4–9	2137	5–11	1335	5–63	1239
3–97	2066	4–10	1417	5–12	1343	5–64	1240
3–101	1610	4–11	1618	5–13	1322	5–65	1241
3–102	1641	4–12	1638	5–14	1336	5–66	1242
3–103	1615	4–13	1614	5–15	1344	5–67	1243
3–104	1644	4–14	1383	5–17	1337	5–68	1244
3–105	1599	4–20	1594	5–18	1345	5–70	1246
3–106	1943	4–22	1866	5–20	1323	5–71	1247
3–107	1999	4–23	1864	5–21	1324	5–72	1248
3–108	2166	4–24	1394	5–22	1338	5–73	1249
3–111	2104	4–25	1379	5–23	1346	5–74	1237
3–112	2110	4–26	1295	5–25	1339	5–76	1310
3–113	2106	4–27	1293	5–26	1347	5–122	1328

NORFOLK NAVY YARD—Continued.

Yard No.	New No.	Yard No.	New No.	Yard No.	New No.	Yard No.	New No.
5–123	1348	6–24	1143	7–16	1657	9–19	1878
5–124	1301	6–26	1144	7–17	1660	9–20	1879
5–133	1302	6–28	1149	7–19	1664	9–21	1881
5–137	1306	6–30	1151	7–21	1673	9–22	1883
5–141	1688	6–32	1152	7–22	1676	9–23	1885
5–142	1689	6–56	1137	7–24	1682	9–24	1888
5–144	1330	6–57	1147	7–33	1670	9–25	1890
5–147	2124	6–58	1117	7–34	1655	9–26	1891
6–1	1106	7–1	1645	7–35	1649	9–27	1892
6–2	1108	7–2	1698	9–1	1752	9–28	1839
6–3	1109	7–3	1697	9–2	1771	9–29	1872
6–5	1111	7–4	1696	9–3	1806	9–31	1844
6–6	1112	7–5	1677	9–4	1805	9–32	1845
6–8	1121	7–7	1671	9–5	1821	9–33	1847
6–10	1122	7–8	1680	9–6	1811	9–34	1848
6–11	1124	7–9	1668	9–7	1815	9–40	1855
6–14	1125	7–10	1669	9–8	1861	9–41	1856
6–15	1128	7–11	1665	9–9	1788	9–42	1858
6–16	1132	7–12	1679	9–10	1790	9–47	1808
6–18	1134	7–13	1646	9–11	1791	9–48	1875
6–19	1136	7–14	1648	9–17	1876	9–49	1874
6–22	1140	7–15	1651	9–18	1877		

PORTSMOUTH, N. H., NAVY YARD.

Yard No.	New No.	Yard No.	New No.	Yard No.	New No.	Yard No.	New No.
1	1024	48	1170	134	1335	233	1638
2	1025	101	1318	135	1336	234	1618
3	1029	102	1319	138	1338	235	1605
4	1031	103	1320	139	1339	236	1480
5	1041	104	1321	147	1240	237	1994
6	1044	105	1322	148	1241	238	1992
7	1046	106	1323	149	1242	239	1574
8	1049	107	1324	150	1243	248	2062
9	1057	108	1325	161	1351	254	1972
10	1059	109	1326	163	1353	255	2005
11	1061	116	1340	179	1896	256	1803
12	1064	117	1341	181	1898	257	1993
13	1068	118	1342	192	1365	258	1472
14	1013	119	1343	194	1366	381	1971
41	1154	120	1344	204	1358	390	1473
42	1156	121	1345	206	1359	391	1654
43	1158	122	1346	217	1005	393	1012
44	1162	123	1347	218	1010	399	2121
45	1163	131	1332	219	1016	406	1349
46	1164	132	1333	220	1281	407	1329
47	1167	133	1334	232	1481		

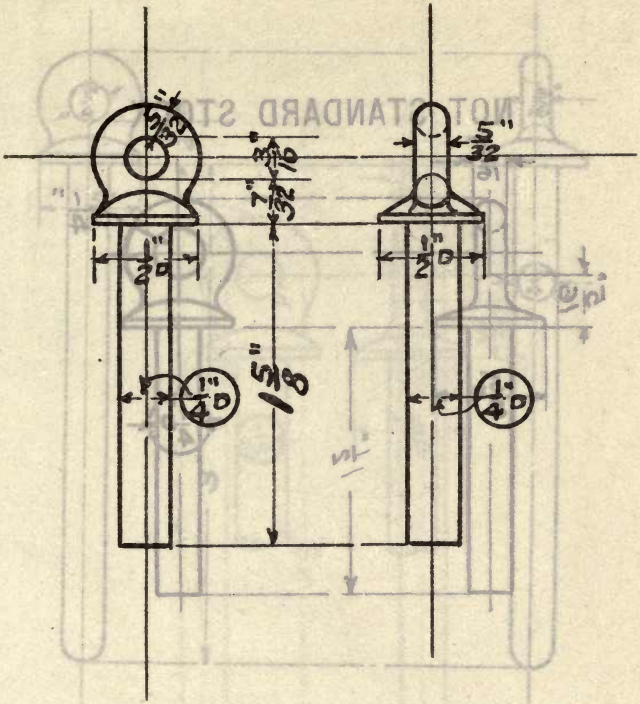

BOLT, EYE, COLLAR, 1/4″

Eye, 3/16″ Length, 1 5/8″

Weight (steel), 0.06 lb. **Die number, 1000-Y**
Former die number, (11)

NOT STANDARD STOCK

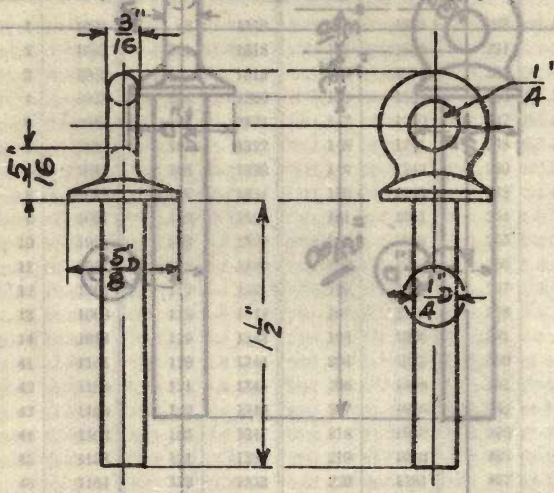

BOLT, EYE, COLLAR, 1/4″

Eye, 1/4″ Length, 1 1/2″

Weight (steel), 0.08 lb. **Die number, 1001-Y**
Former die number, (191)

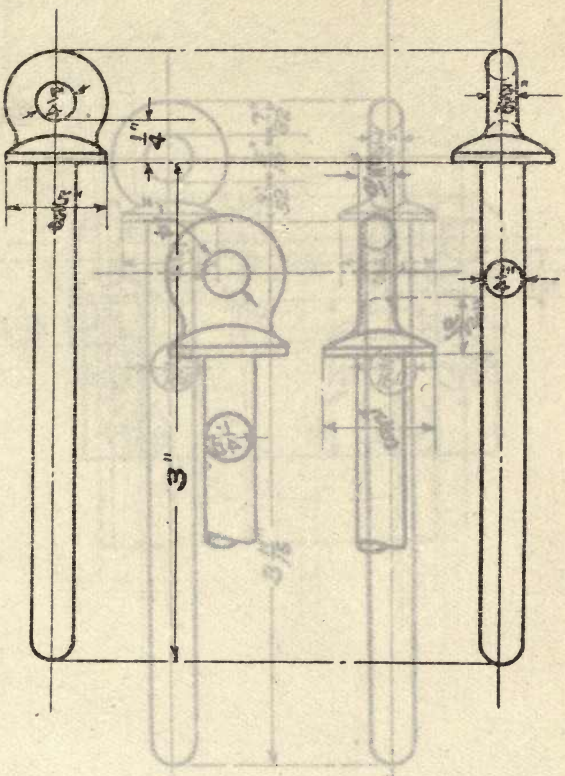

BOLT, EYE, COLLAR, 1/4″

Eye, 1/4″ Length, 3′

Weight, lbs. Die number, 1002-M
Former die number, (3-35)

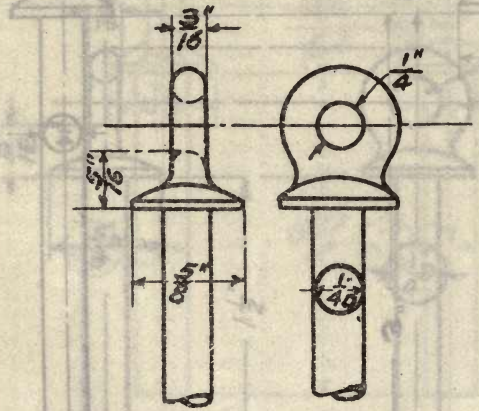

BOLT, EYE, COLLAR, 1/4″

Eye, 1/4″ Length, open die

Weight, lbs. Die number, 1003-Y
Former die number, (457)

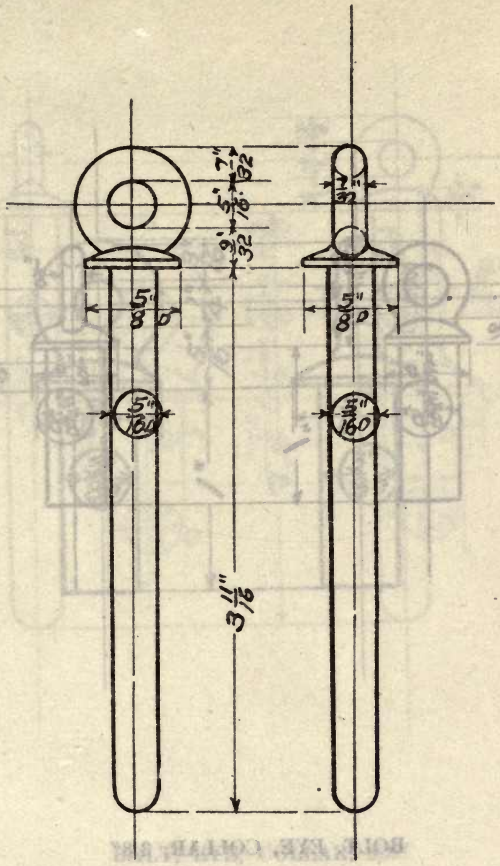

BOLT, EYE, COLLAR, 5/16″

Eye, 5/16″ Length, 3 11/16″

Weight (steel), 0.13 lb. **Die number, 1004-Y**
Former die number, (12)

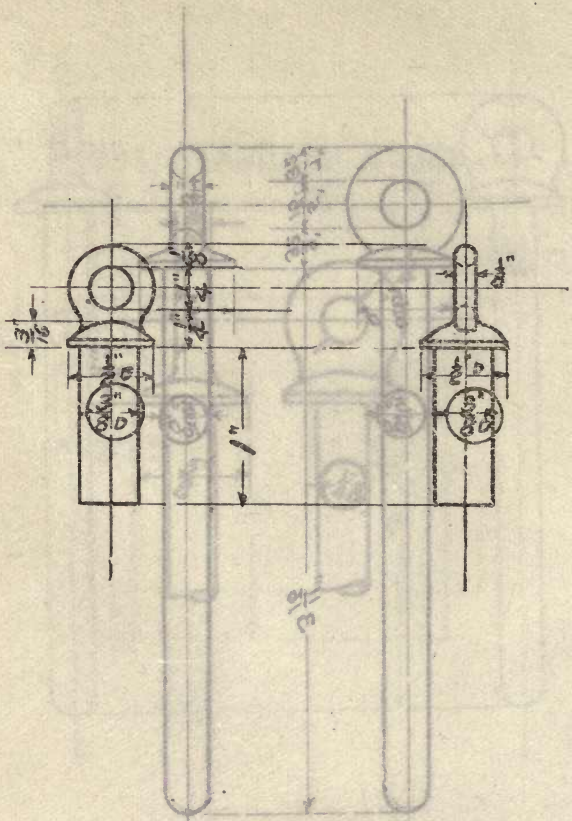

BOLT, EYE, COLLAR, 3/8″

Eye, 1/4″ Length, 1″

Weight (brass), 0.075 lb. Die number, 1005-MNYP
Former die numbers, (3-3) (3-3) (88-1) (217)

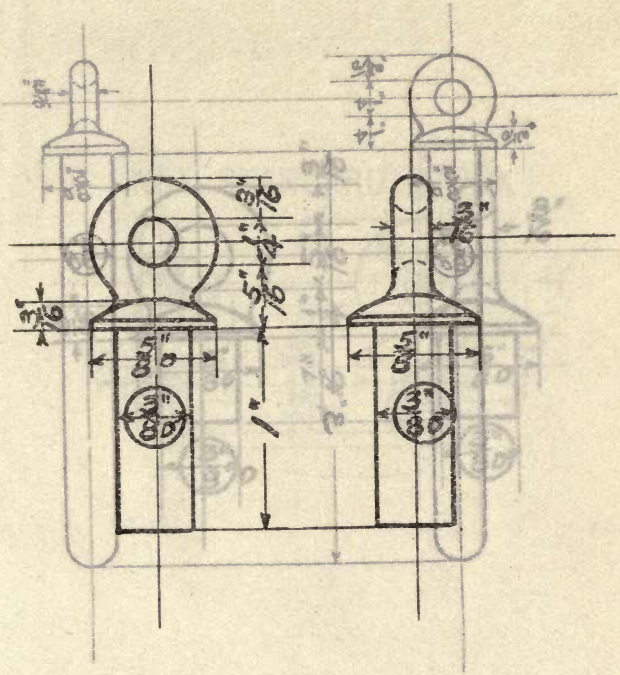

BOLT, EYE, COLLAR, 3/8″

Eye, 1/4″ Length, 1″

Weight (steel), 0.06 lb. Die number, 1006-B
Former die number, (32)

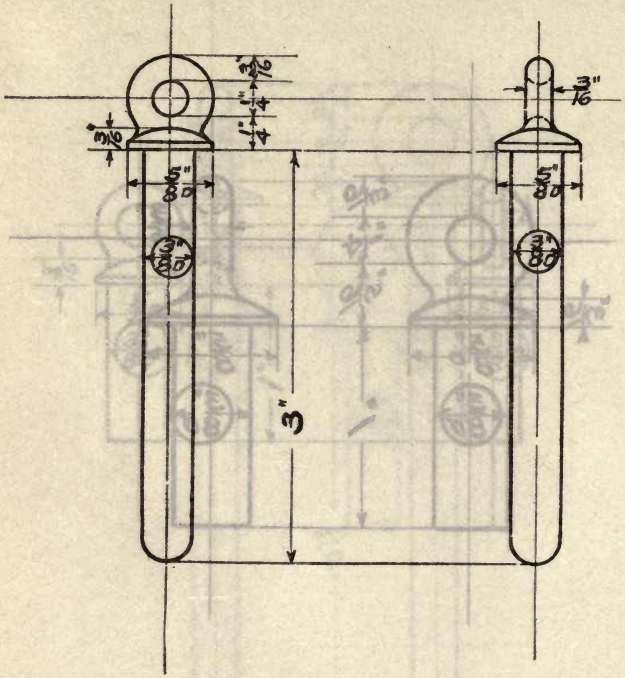

BOLT, EYE, COLLAR, 3/8″

Eye, 1/4″ Length, 3″

Weight, lbs. **Die number, 1007-M**
Former die number, (3-65)

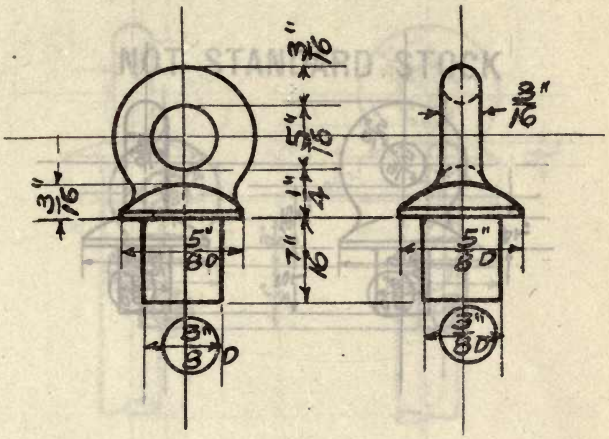

BOLT, EYE, COLLAR, 3/8″

Eye, 5/16″ Length, 7/16″

Weight (steel), 0.13 lb. **Die number, 1008-B**
Former die number, (215)

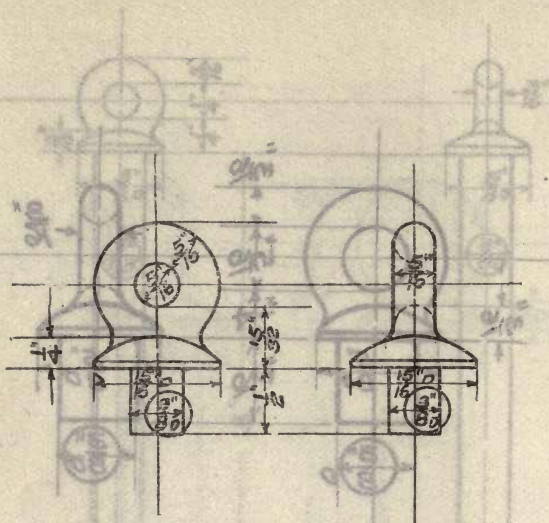

BOLT, EYE, COLLAR, 3/8″

Eye, 5/16″ Length, 1/2″

Weight (steel), 0.13 lb. Die number, 1009-B
Former die number, (29)

NOT STANDARD STOCK

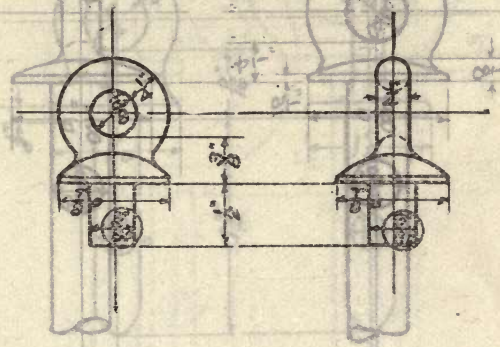

BOLT, EYE, COLLAR, 3/8"

Eye, 3/8" Length, 1/2"

Weight (steel), 0.08 lb. Die number, 1010-YPMN
Former die numbers, (39) (218) (3-4) (3-4)

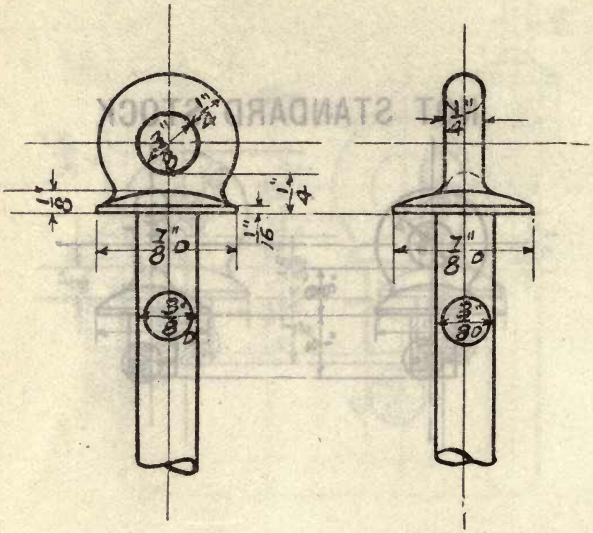

BOLT, EYE, COLLAR, 3/8″

Eye, 3/8″ Length, open die

Weight, lbs. **Die number, 1011-Y**
Former die number, (454)

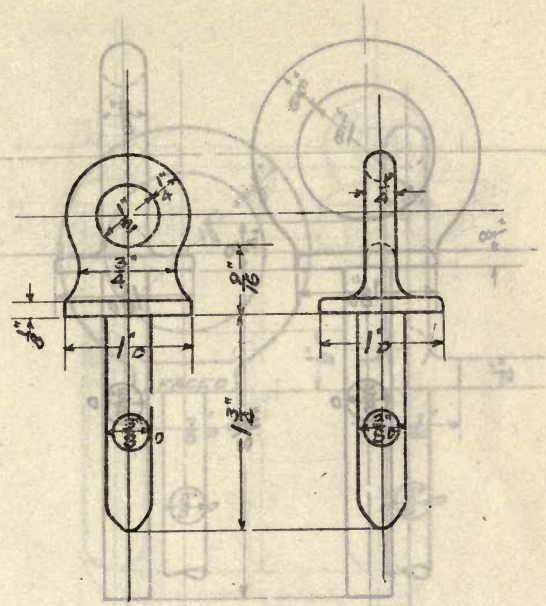

BOLT, EYE, COLLAR, 3/8″

Eye, 1/2″ Length, 1 3/4″

Weight (steel), 0.13 lb. Die number, 1012-P
Former die number, (393)

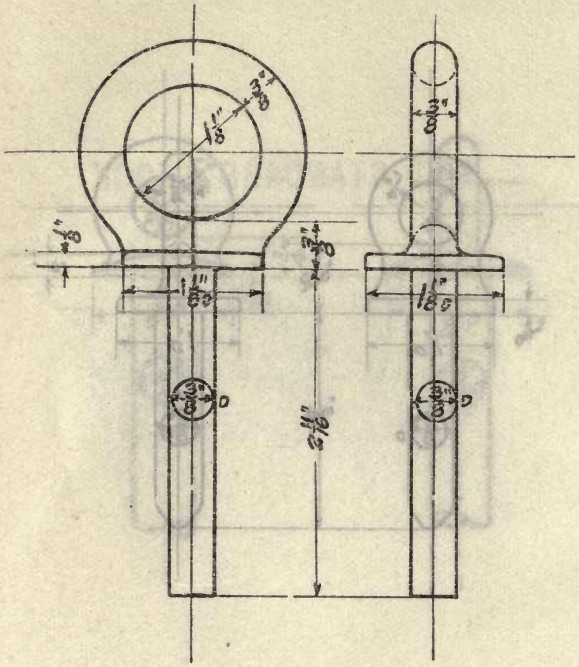

BOLT, EYE, COLLAR, 3/8″

Eye, 1 1/8″ Length, 2 11/16″

Weight, lbs. Die number, 1013-P
Former die number, (14)

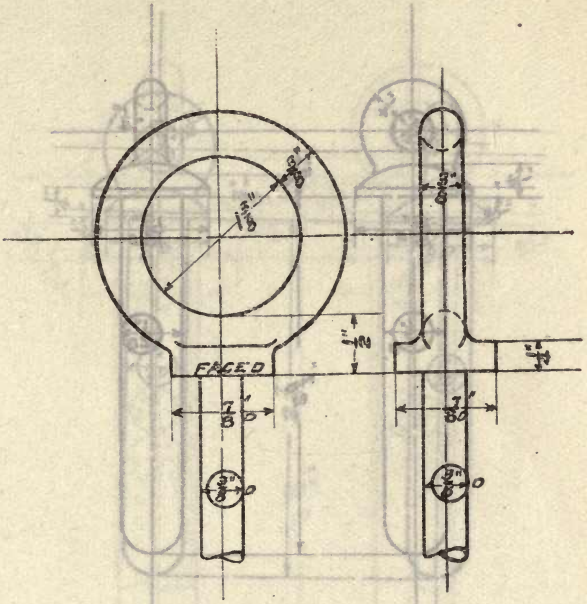

BOLT, EYE, COLLAR, 3/8″

Eye, 1 3/8″ Length, open die

Weight, lbs. Die number, 1014-Y
Former die number, (1028)

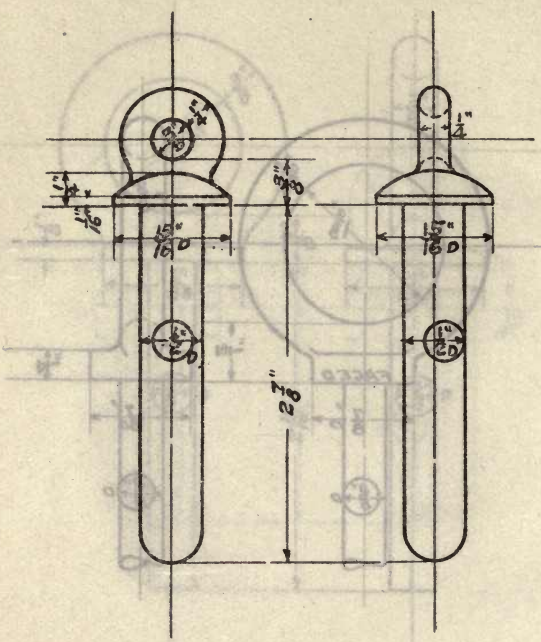

BOLT, EYE, COLLAR, 1/2″

Eye, 3/8″ Length, 2 7/8″

Weight (steel), 0.22 lb. Die number, 1015-Y
Former die number, (40)

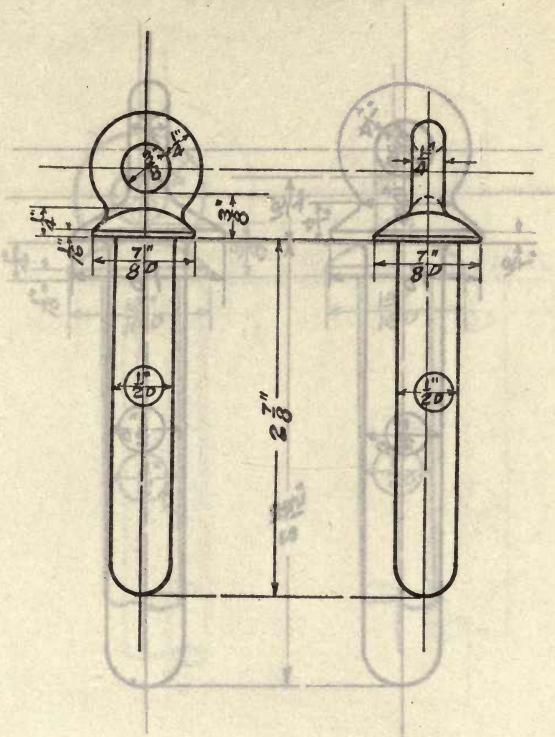

BOLT, EYE, COLLAR, 1/2″

Eye, 3/8″ Length, 2 7/8″

Weight (steel), 0.22 lb. Die number, 1016-MNP
Former die number, (3-5) (3-5) (219)

NOT STANDARD STOCK

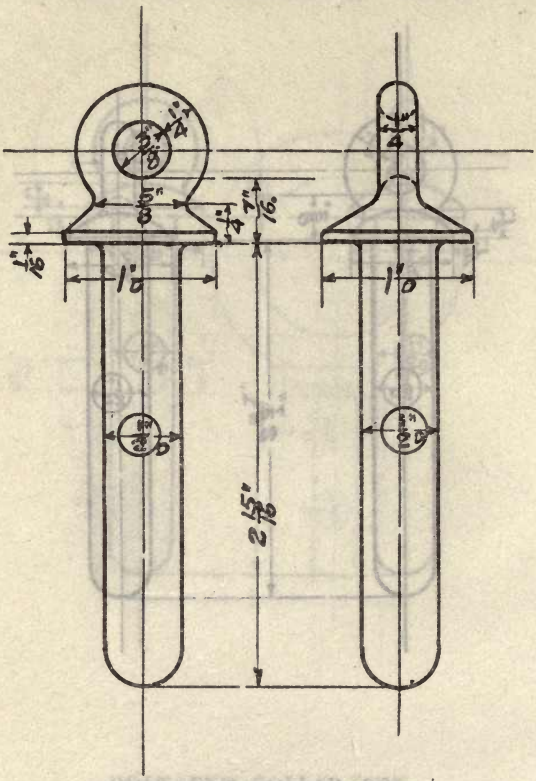

BOLT, EYE, COLLAR, 1/2″

Eye, 3/8″ Length, 2 15/16″

Weight (steel), 0.25 lb. **Die number, 1017-B**
Former die number, (27)

NOT STANDARD STOCK

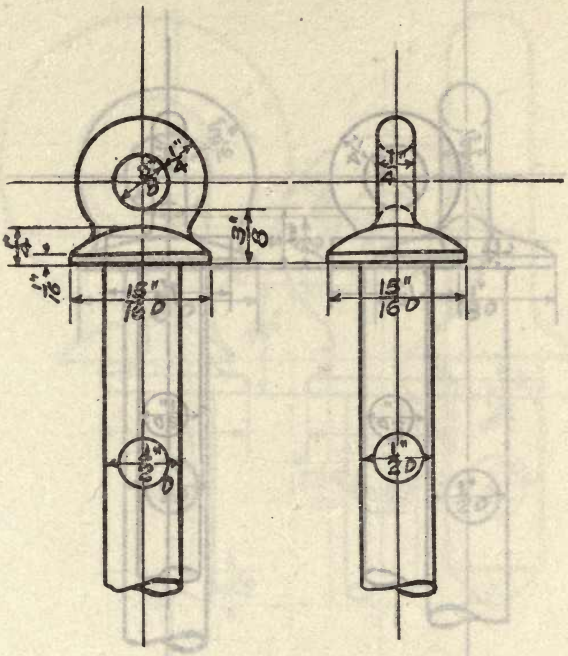

BOLT, EYE, COLLAR, 1/2″

Eye, 3/8″ Length, open die

Weight, lbs. Die number, 1018-Y
Former die number, (453)

NOT STANDARD STOCK

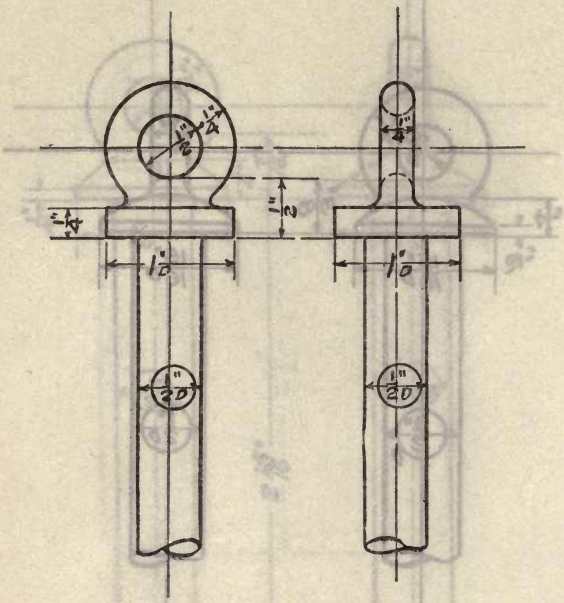

BOLT, EYE, COLLAR, 1/2″

Eye, 1/2″ Length, open die

Weight, lbs. Die number, 1019-Y
Former die number, (1053)

NOT STANDARD STOCK

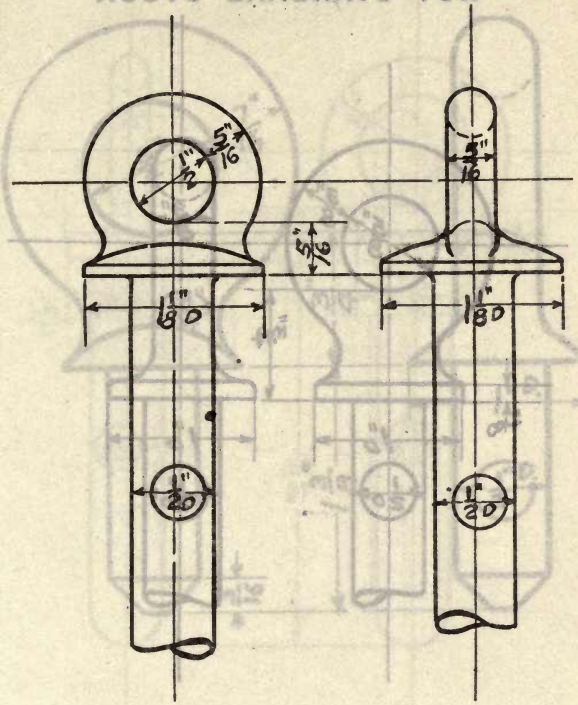

BOLT, EYE, COLLAR, 1/2″

Eye, 1/2″ Length, open die

Weight, lbs. Die number, 1020-B
Former die number, (111)

NOT STANDARD STOCK

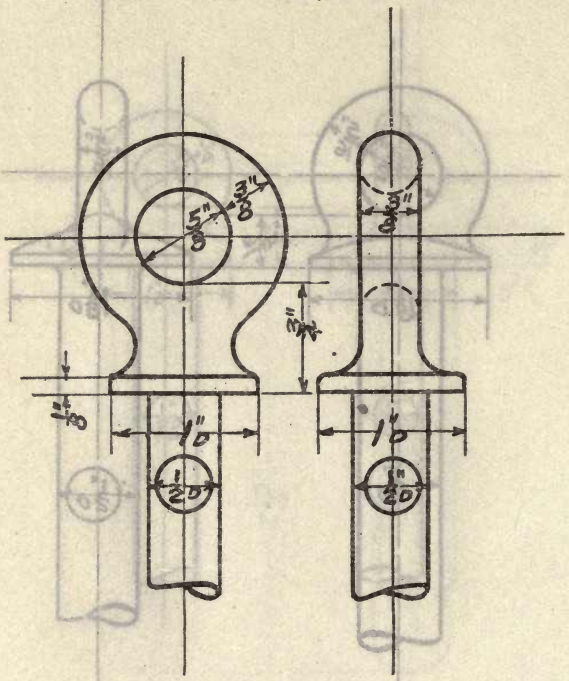

BOLT, EYE, COLLAR, 1/2″

Eye, 5/8″ Length, open die

Weight, lbs. Die number, 1021-N
Former die number, (3-12)

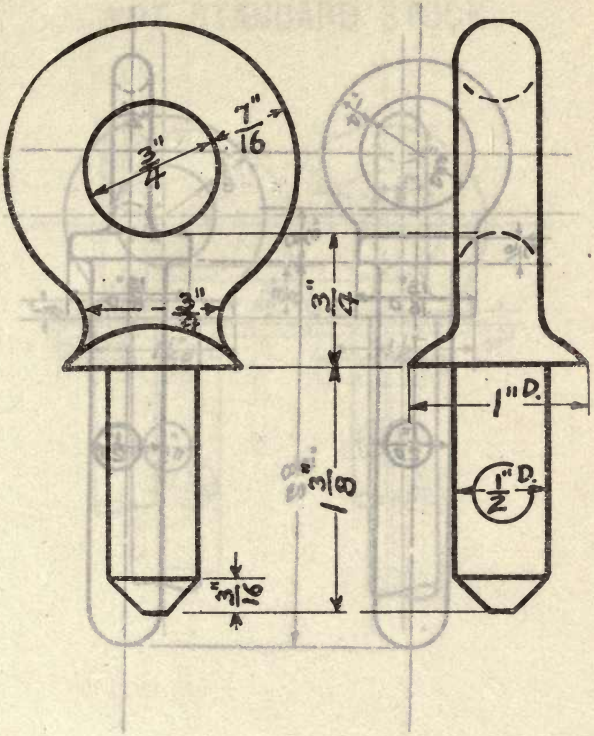

BOLT, EYE, COLLAR, 1/2″

Eye, 3/4″ Length, 1 3/8″

Weight (steel), 0.25 lb. **Die number, 1022-YM**
Former die number, (396)

NOT STANDARD STOCK

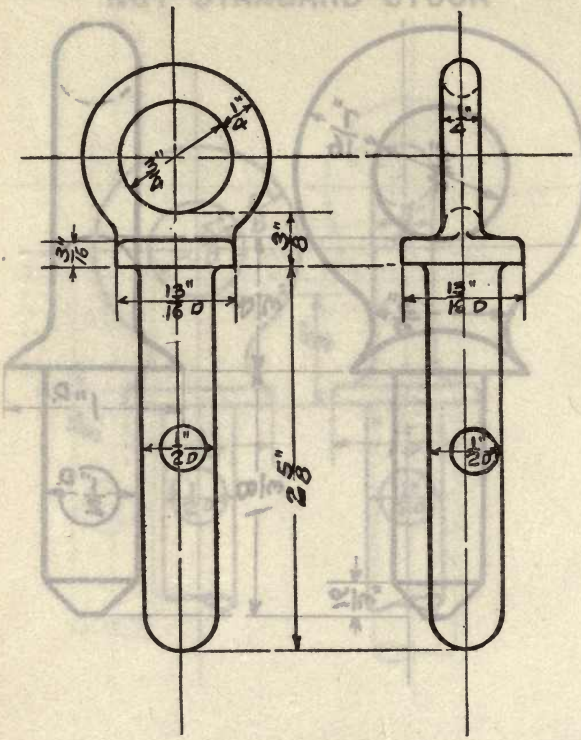

BOLT, EYE, COLLAR, 1/2″

Eye, 3/4″ Length, 2 5/8″

Weight (steel), 0.25 lb. **Die number, 1023-B**
Former die number, (98)

NOT STANDARD STOCK

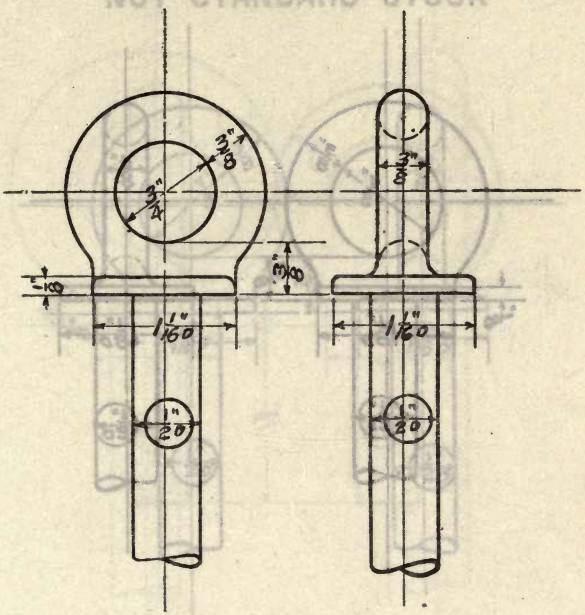

BOLT, EYE, COLLAR, 1/2″

Eye, 3/4″ Length, open die

Weight (steel), lbs. Die number, 1024-BYPMN
Former die numbers, (2) (17-1) (1) (1-1) (1-1)

NOT STANDARD STOCK

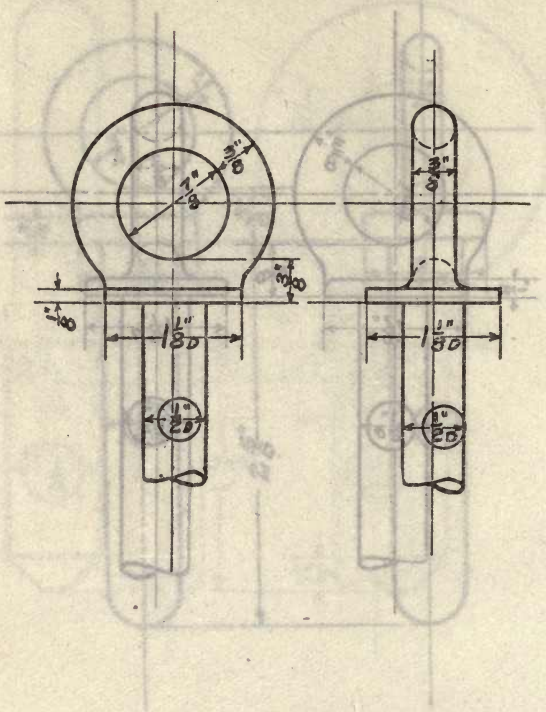

BOLT, EYE, COLLAR, 1/2″

Eye, 7/8″ Length, open die

Weight (steel), lbs. Die number, 1025-PNMY
Former die numbers, (2) (1-2) (1-2) (17-2)

NOT STANDARD STOCK

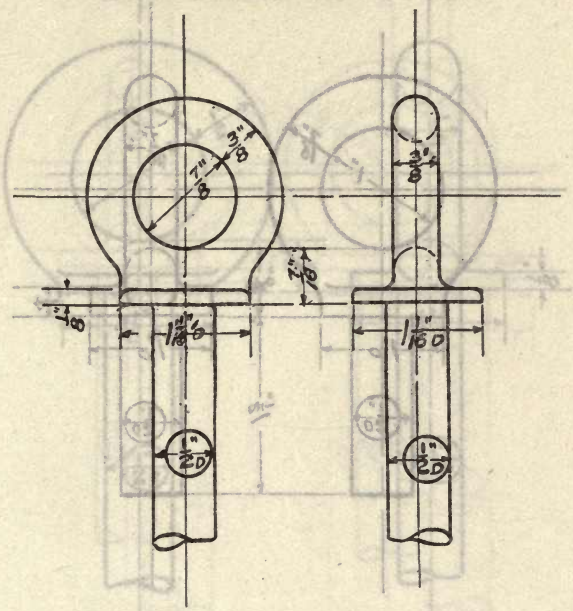

BOLT, EYE, COLLAR, 1/2″

Eye, 7/8″ Length, open die

Weight, lbs. **Die number, 1026-B**
Former die number, (19)

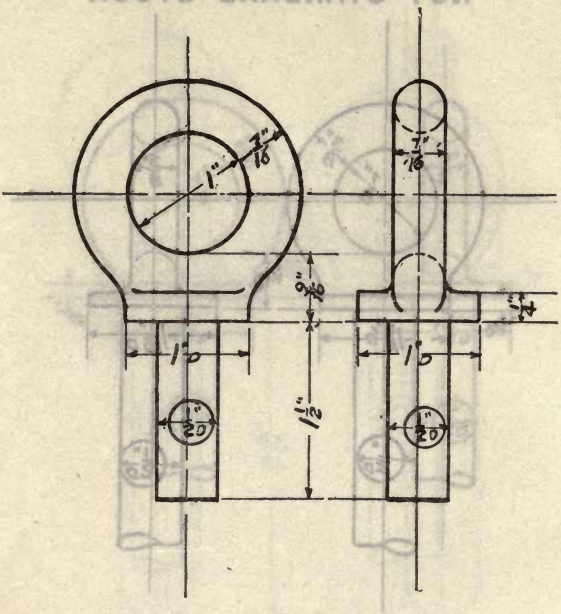

BOLT, EYE, COLLAR, 1/2″

Eye, 1″ Length, 1 1/2″

Weight, lbs. **Die number, 1027-Y**
Former die number, (1052)

NOT STANDARD STOCK

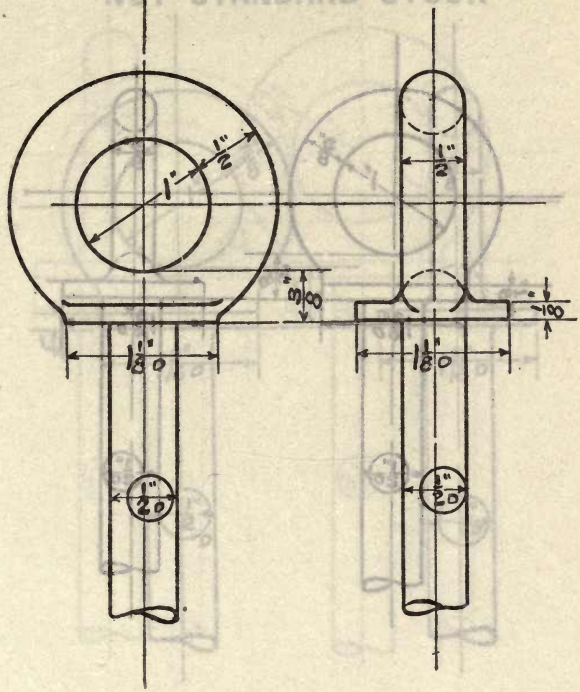

BOLT, EYE, COLLAR, 1/2″

Eye, 1″ Length, open die

Weight (steel), lbs. **Die number, 1028-Y**
Former die number (4)

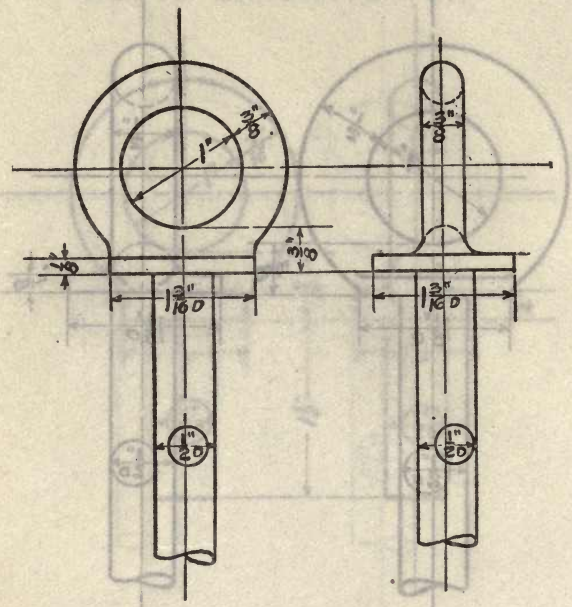

BOLT, EYE, COLLAR, 1/2″

Eye, 1″ Length, open die

Weight (steel), lbs. Die number, 1029-PNMY
Former die numbers, (3) (1-3) (1-3) (19-3)

NOT STANDARD STOCK

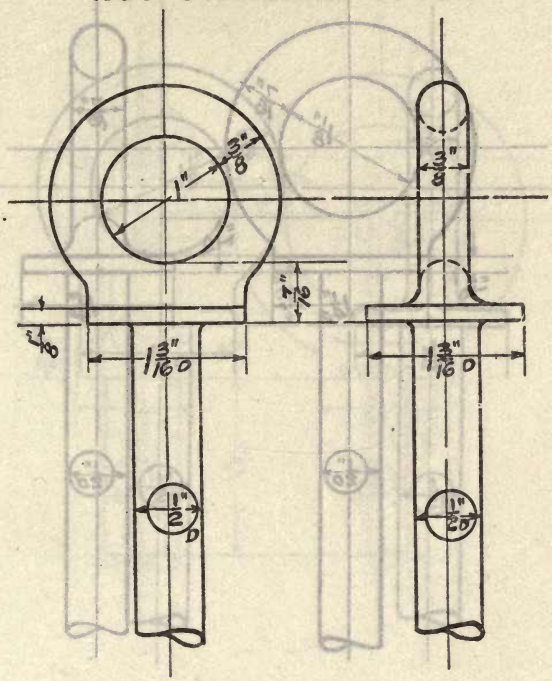

BOLT, EYE, COLLAR, 1/2″

Eye, 1″ Length, open die

Weight, lbs. **Die number, 1030-B**
Former die number, (20)

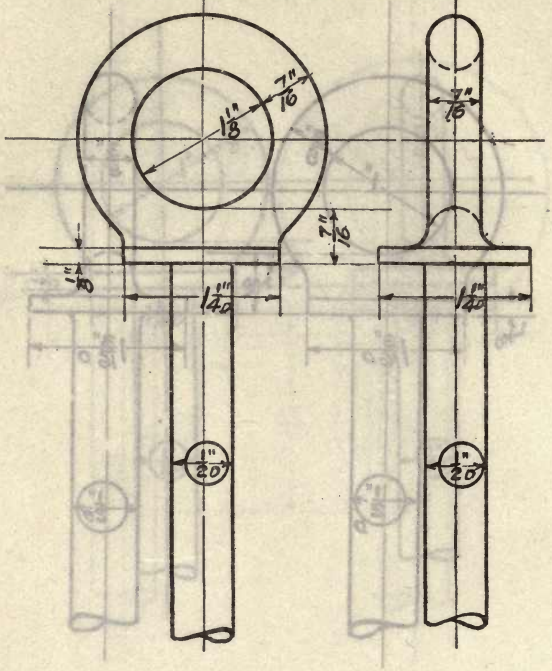

BOLT, EYE, COLLAR, 1/2″

Eye, 1 1/8″ Length, open die

Weight (steel) lbs. Die number, 1031-PNMY
Former die numbers, (4) (1-4) (1-4) (19-4)

NOT STANDARD STOCK

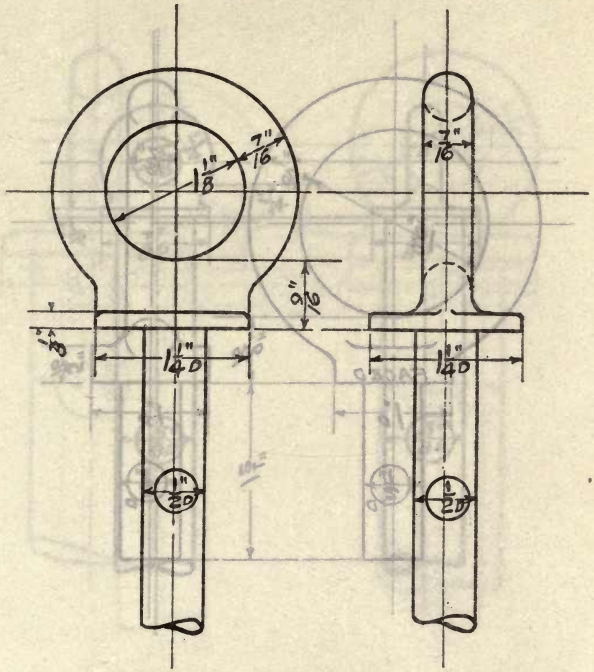

BOLT, EYE, COLLAR, 1/2″

Eye, 1 1/8″ Length, open die

Weight, lbs. Die number, 1032-B
Former die number, (15)

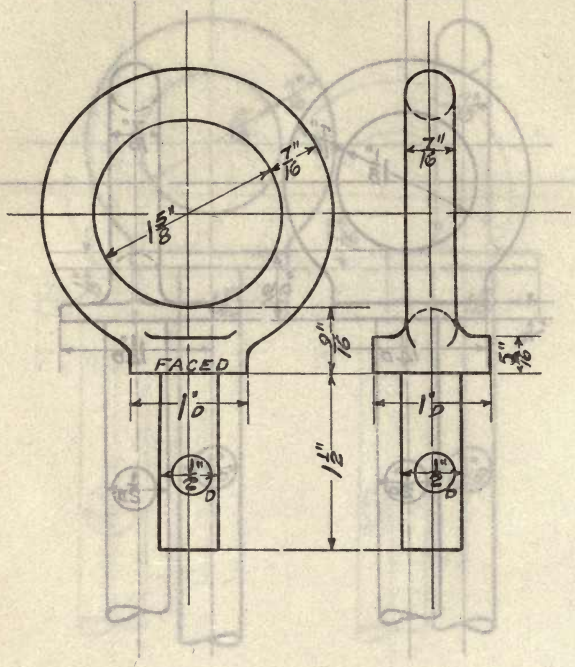

BOLT, EYE, COLLAR, 1/2″

Eye, 1 5/8″ Length, 1 1/2″

Weight, lbs. **Die number, 1033-Y**
Former die number (1029)

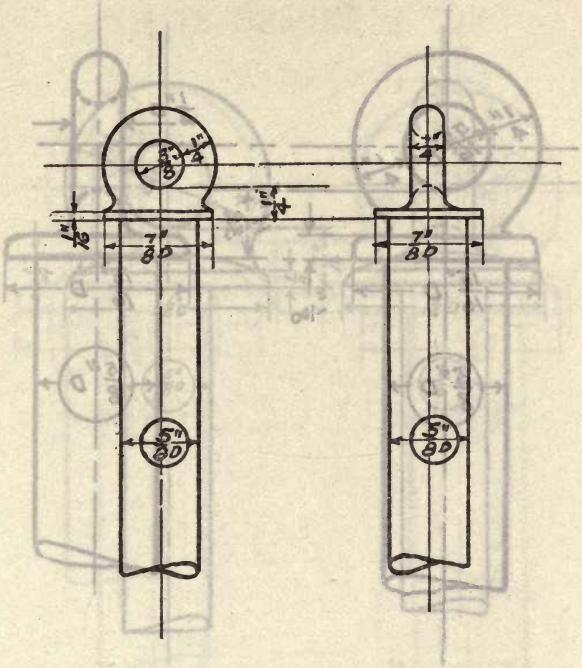

BOLT, EYE, COLLAR, 5/8″

Eye, 3/8″ Length, open die

Weight, lbs. **Die number, 1034-Y**
Former die number, (420)

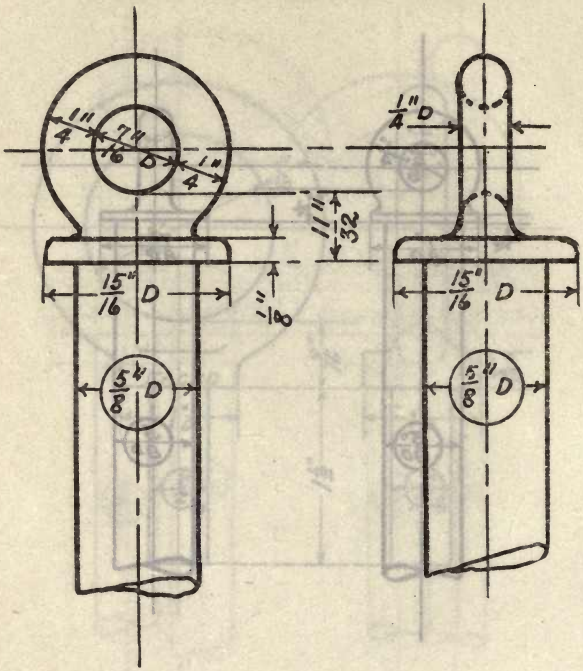

BOLT, EYE, COLLAR, 5/8″

Eye, 7/16″ Length, open die

Weight, lbs. Die number, 1035-NM
Former die numbers, (3-18) (3-18)

NOT STANDARD STOCK

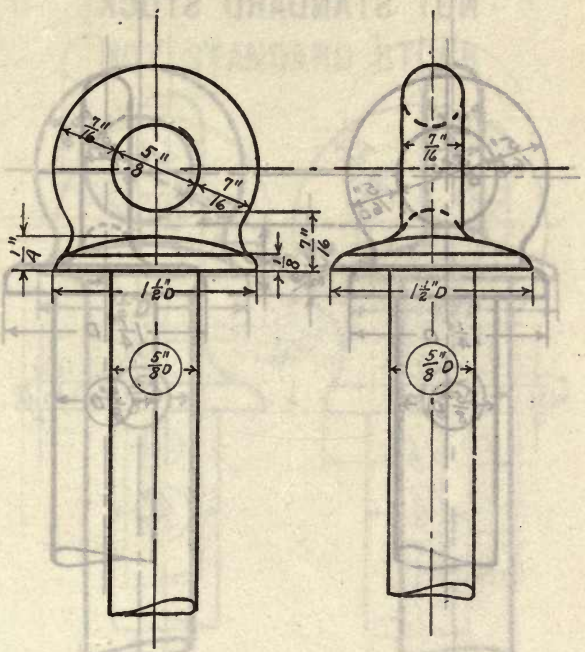

BOLT, EYE, COLLAR, 5/8″

Eye, 5/8″ Length, open die

Weight, lbs. Die number, 1036-BY
Former die numbers, (112) (54)

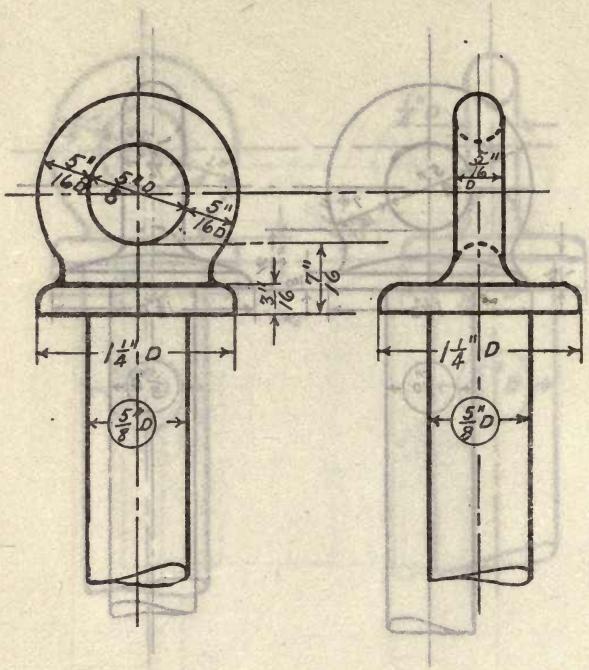

BOLT, EYE, COLLAR, 5/8″

Eye, 5/8″ Length, open die

Weight (steel), lbs. **Die number, 1037-Y**
Former die number, (3)

NOT STANDARD STOCK

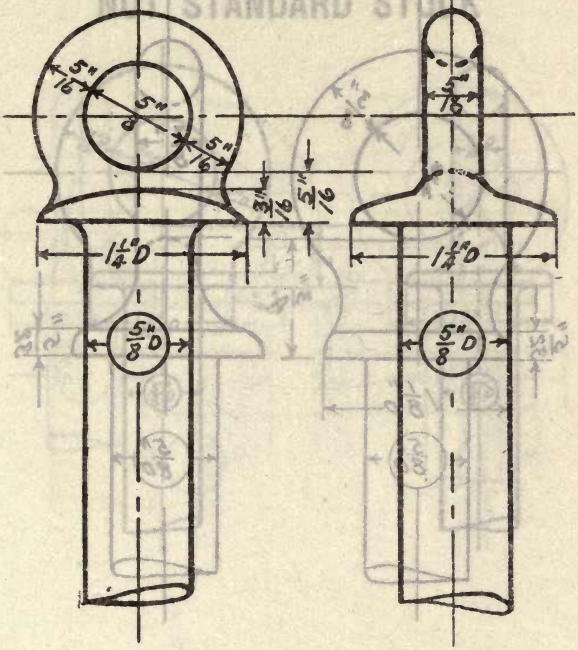

BOLT, EYE, COLLAR, 5/8″

Eye, 5/8″ Length, open die

Weight, lbs. Die number, 1038-B
Former die number, (113)

NOT STANDARD STOCK

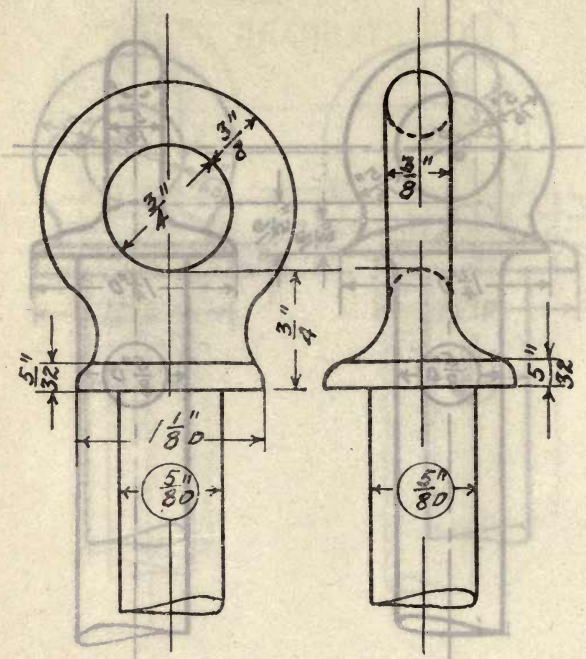

BOLT, EYE, COLLAR, 5/8″

Eye, 3/4″ Length, open die

Weight, lbs. Die number, 1039-N
Former die number, (3-13)

NOT STANDARD STOCK

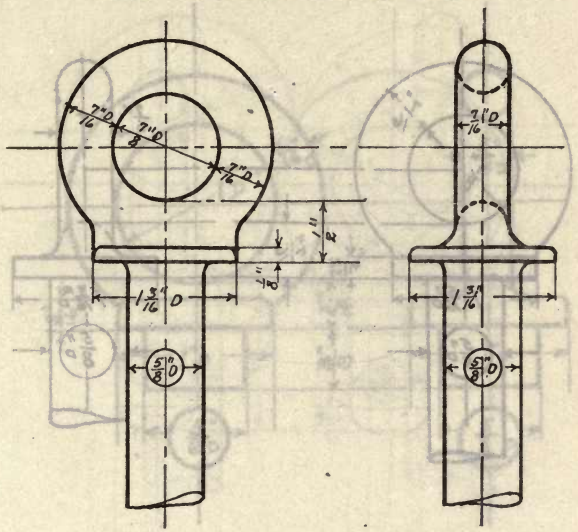

BOLT, EYE, COLLAR, 5/8″

Eye, 7/8″ Length, open die

Weight, lbs. **Die number, 1040-B**
Former die number, (16)

NOT STANDARD STOCK

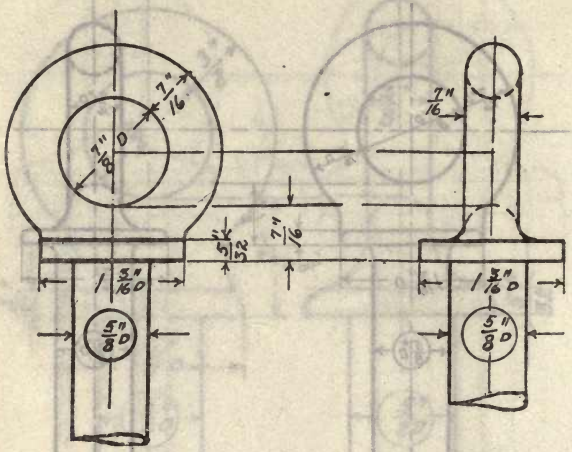

BOLT, EYE, COLLAR, 5/8″

Eye, 7/8″ Length, open die

Weight (steel) lbs. Die number, 1041-PNMY
Former die numbers, (5) (1-5) (1-5) (20-5)

NOT STANDARD STOCK

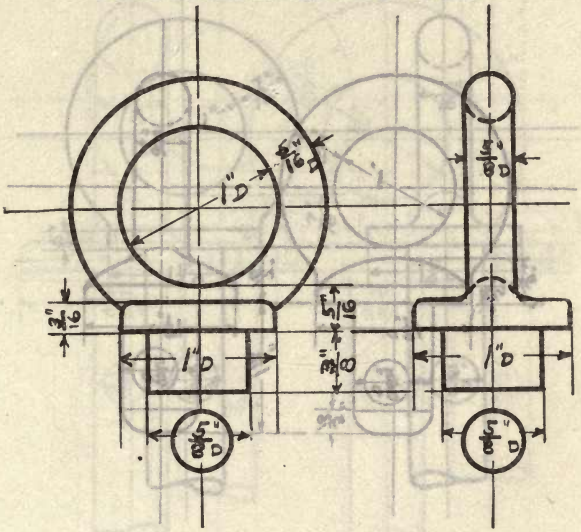

BOLT, EYE, COLLAR, 5/8″

Eye, 1″ Length, 3/8″

Weight, lbs. Die number, 1042-N
Former die number, (1-61)

NOT STANDARD STOCK

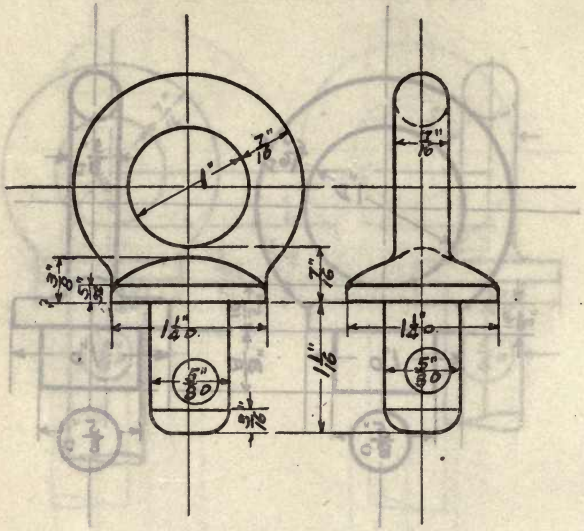

BOLT, EYE, COLLAR, 5/8″

Eye, 1″ Length, 1 1/16″

Weight (steel), 0.31 lb. **Die number, 1043-B**
Former die number (158)

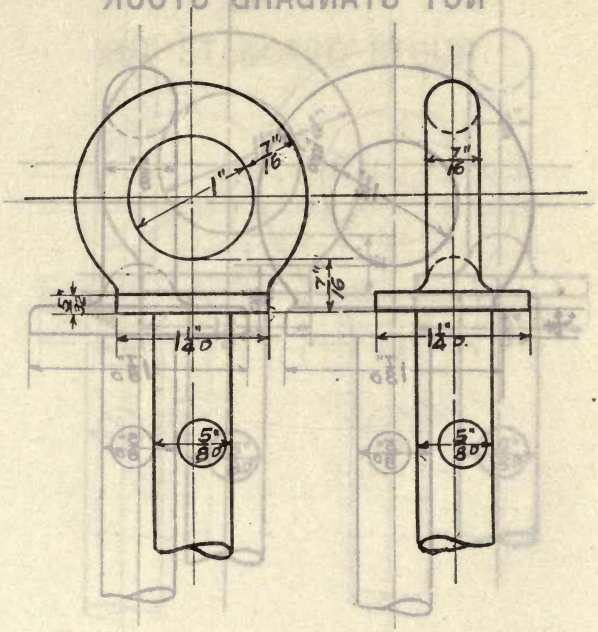

BOLT, EYE, COLLAR, 5/8″

Eye, 1″ Length, open die

Weight (steel) lbs. Die number, 1044-PNMYB
Former die numbers, (6) (1-6) (1-6) (20-6) (332)

NOT STANDARD STOCK

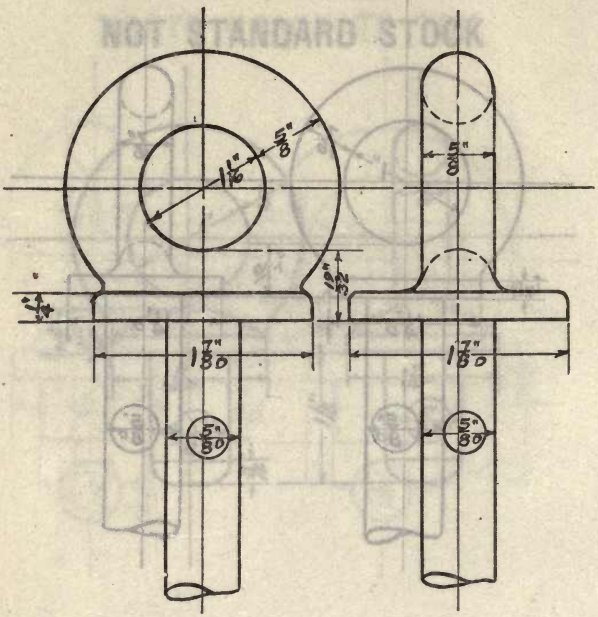

BOLT, EYE, COLLAR, 5/8″

Eye, 1 1/16″ Length, open die

Weight (steel), lbs. **Die number, 1045-Y**
Former die number (5)

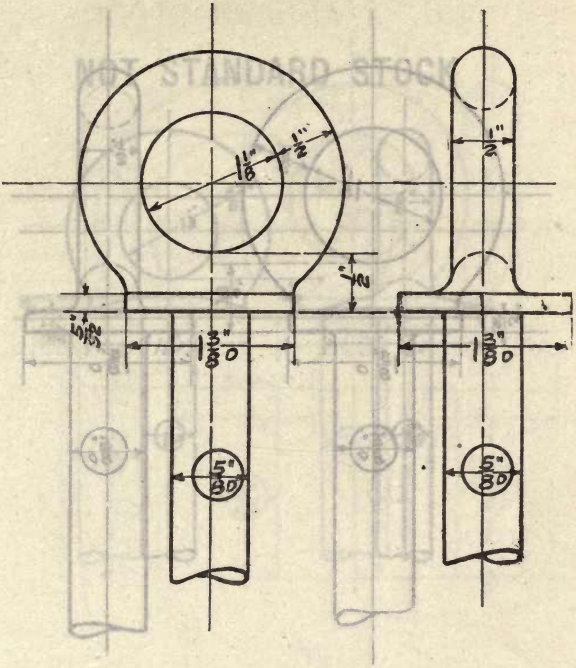

BOLT, EYE, COLLAR, 5/8″

Eye, 1 1/8″ Length, open die

Weight (steel) lbs. Die number, 1046-PNMY
Former die numbers, (7) (1-7) (1-7) (21-7)

NOT STANDARD STOCK

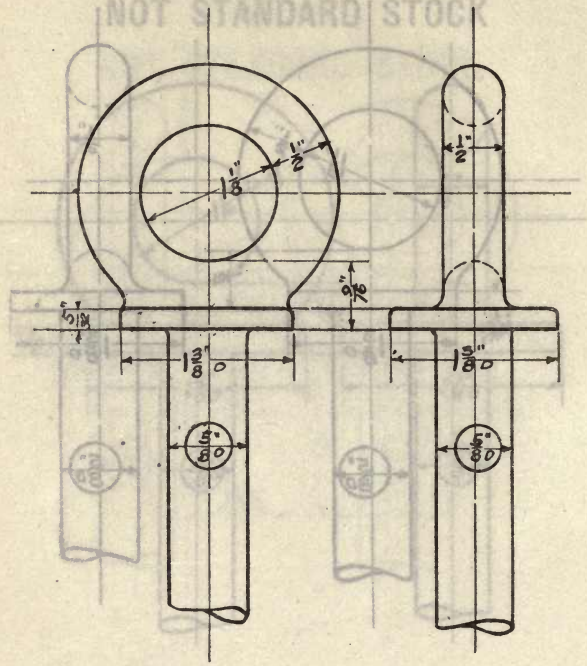

BOLT, EYE, COLLAR, 5/8″

Eye, 1 1/8″ Length, open die

Weight, lbs. **Die number, 1047-B**
Former die number, (12)

NOT STANDARD STOCK

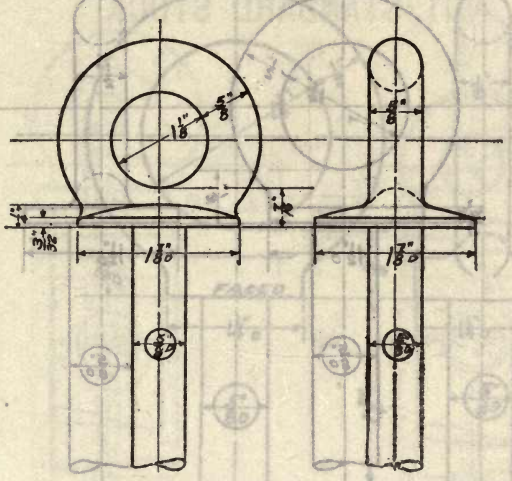

BOLT, EYE, COLLAR, 5/8″

Eye, 1 1/8″ Length, open die

Weight (steel), lbs. Die number, 1048-Y
Former die number, (96)

NOT STANDARD STOCK

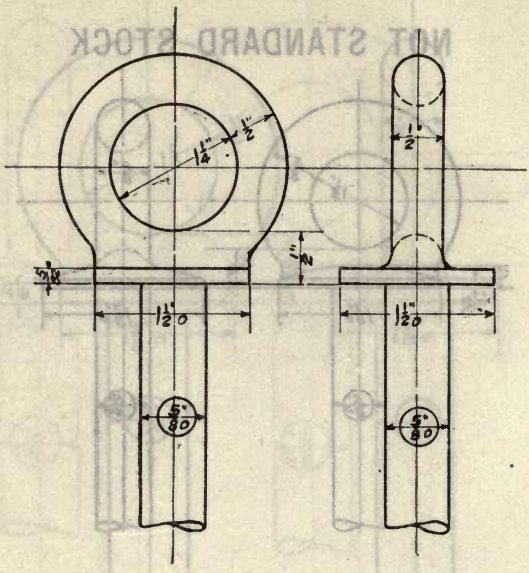

BOLT, EYE, COLLAR, 5/8″

Eye, 1 1/4″ Length, open die

Weight (steel), lbs. Die number, 1049-PMNBY
Former die numbers, (8) (1-8) (1-8) (45) (21-8)

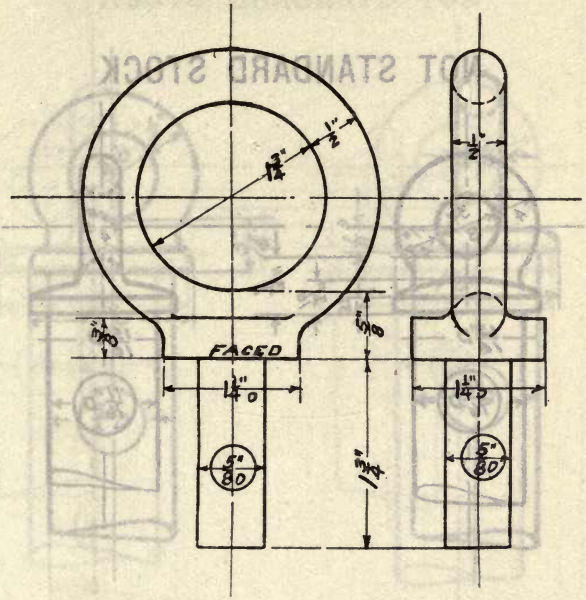

BOLT, EYE, COLLAR, 5/8″

Eye, 1 3/4″ Length, 1 3/4″

Weight, lbs. Die number, 1050-Y
Former die number, (1030)

NOT STANDARD STOCK

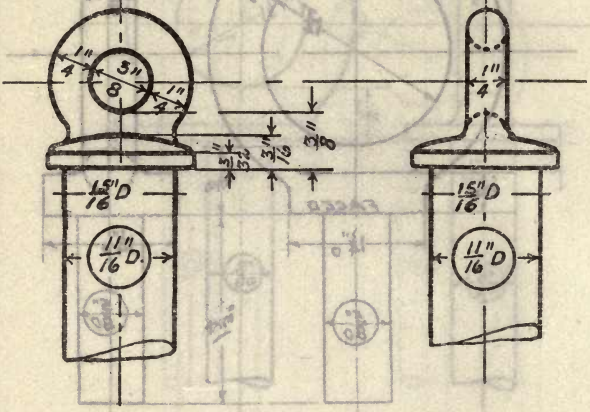

BOLT, EYE, COLLAR, 11/16″

Eye, 3/8″ Length, open die

Weight, lbs. **Die number, 1051-Y**
Former die number, (48)

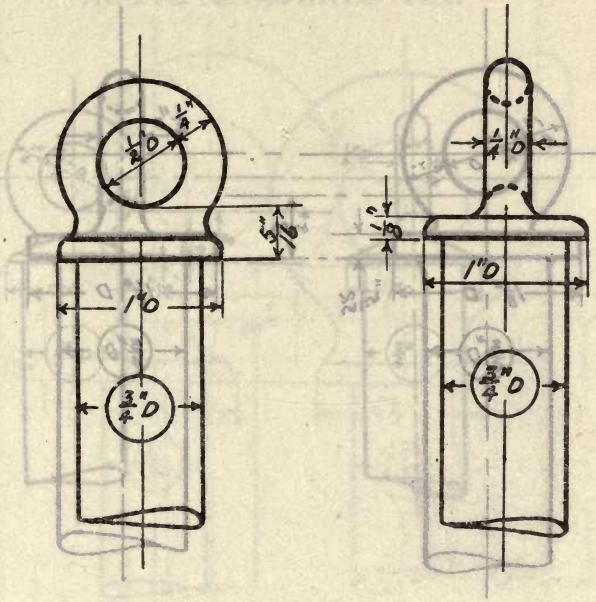

BOLT, EYE, COLLAR, 3/4″

Eye, 1/2″ Length, open die

Weight, lbs. Die number, 1052-MN
Former die numbers, (3-19) (3-19)

NOT STANDARD STOCK

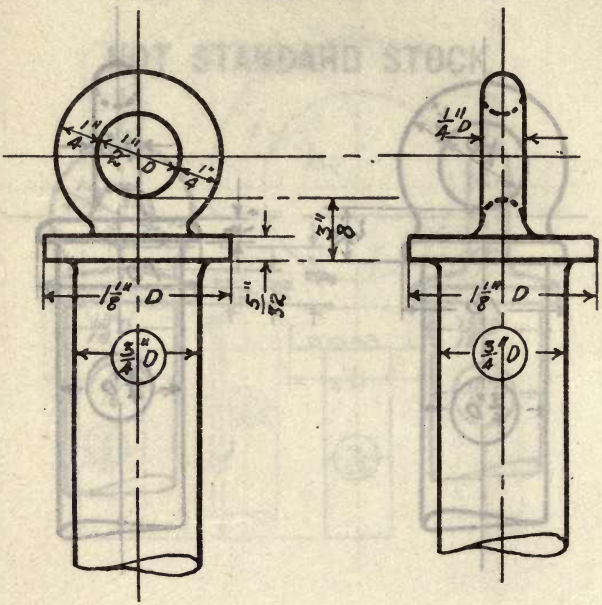

BOLT, EYE, COLLAR, 3/4″

Eye, 1/2″ Length, open die

Weight, lbs. **Die number, 1053-B**
Former die number, (99)

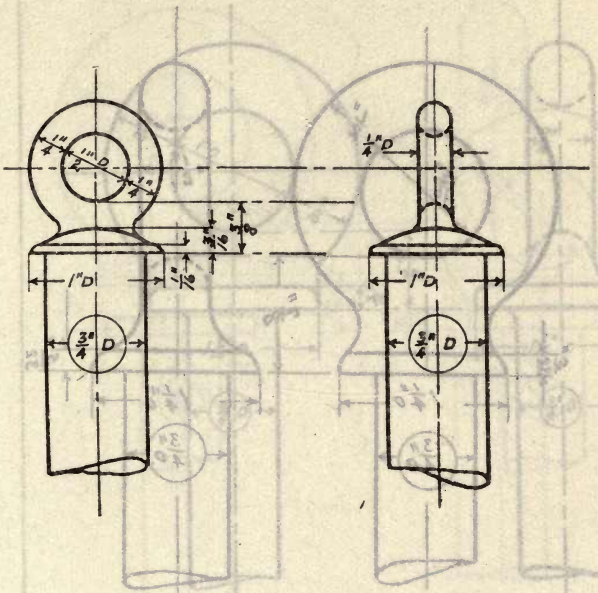

BOLT, EYE, COLLAR, 3/4″

Eye, 1/2″ Length, open die

Weight, lbs. Die number, 1054-Y
Former die number, (190)

NOT STANDARD STOCK

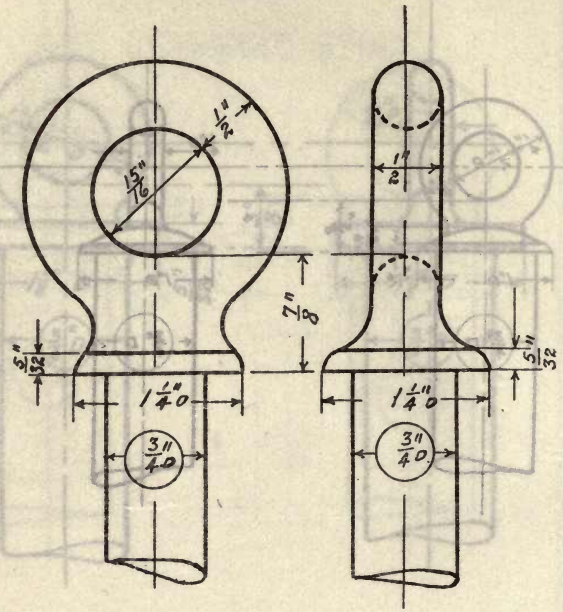

BOLT, EYE, COLLAR, 3/4″

Eye, 15/16″ Length, open die

Weight, lbs. Die number, 1055-N
Former die number, (3-14)

NOT STANDARD STOCK

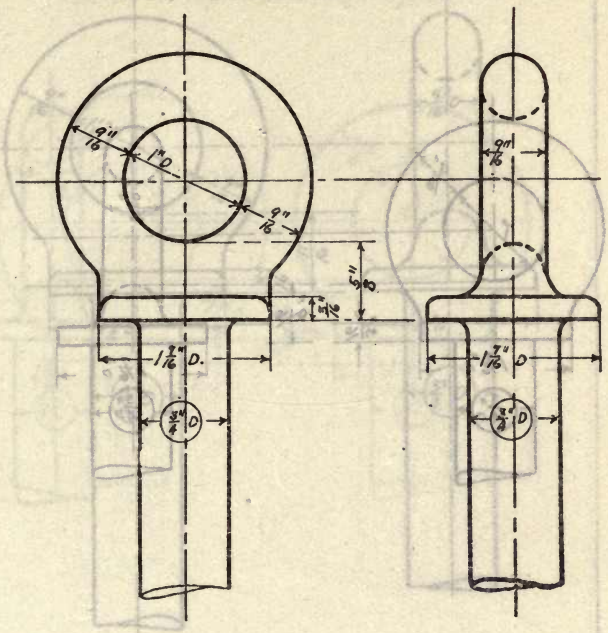

BOLT, EYE, COLLAR, 3/4″

Eye, 1″ Length, open die

Weight, lbs. Die number, 1056-B
Former die number, (13)

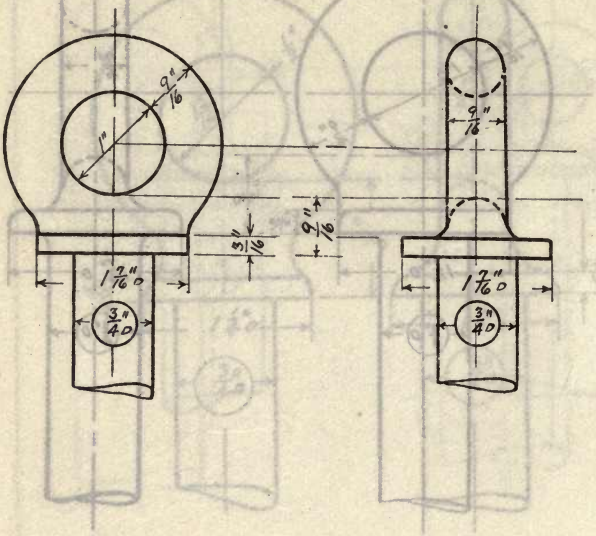

BOLT, EYE, COLLAR, 3/4″

Eye, 1″ Length, open die

Weight (steel), lbs. Die number, 1057-PMNY
Former die numbers, (9) (1-9) (1-9) (22)

NOT STANDARD STOCK

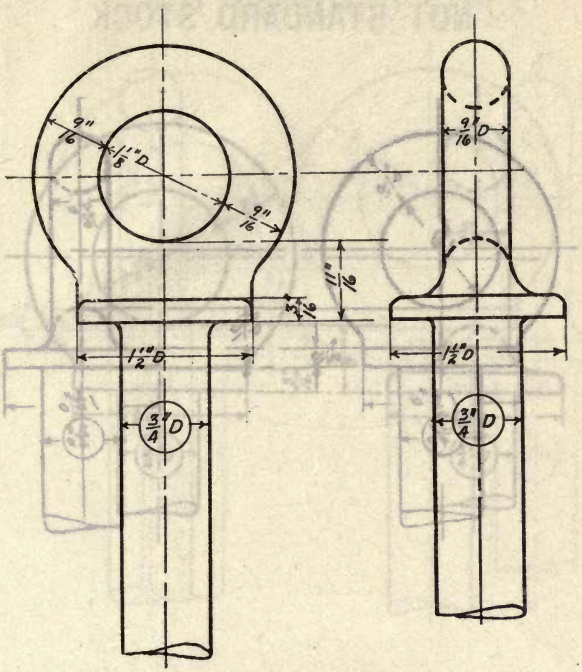

BOLT, EYE, COLLAR, 3/4″

Eye, 1 1/8″ Length, open die

Weight, lbs. **Die number, 1058-B**
Former die number, (14)

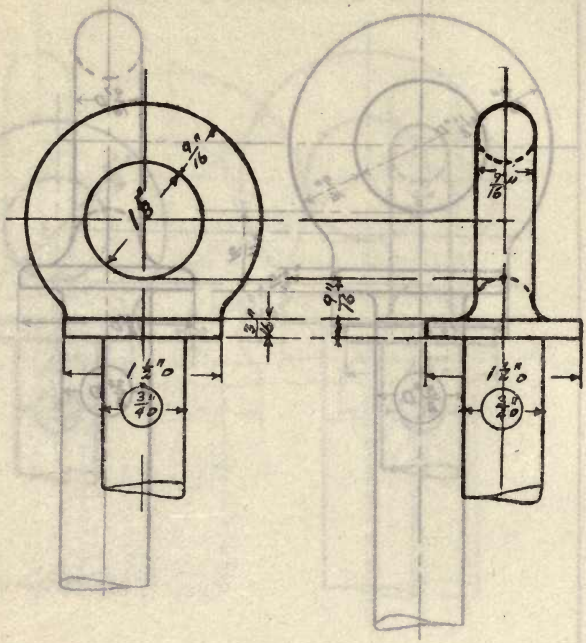

BOLT, EYE, COLLAR, 3/4″

Eye, 1 1/8″ Length, open die

Weight (steel), lbs. Die number, 1059-PMNY
Former die numbers, (10) (1-10) (1-10) (23)

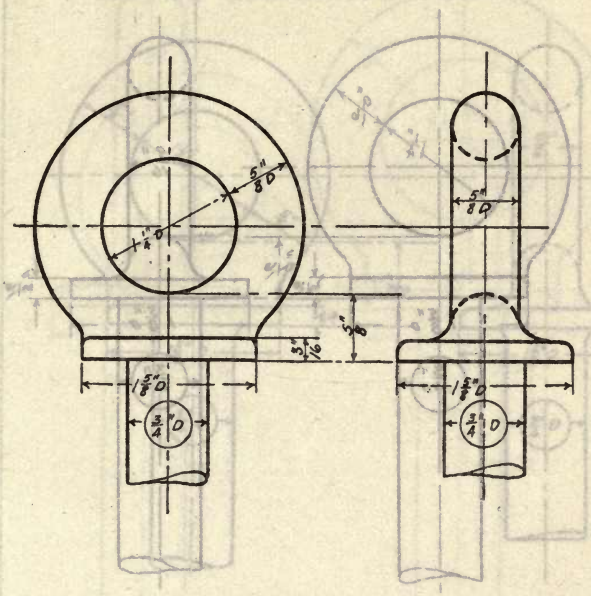

BOLT, EYE, COLLAR, 3/4″

Eye, 1 1/4″ Length, open die

Weight, lbs. Die number, 1060-MN
Former die numbers, (1-11) (1-11)

NOT STANDARD STOCK

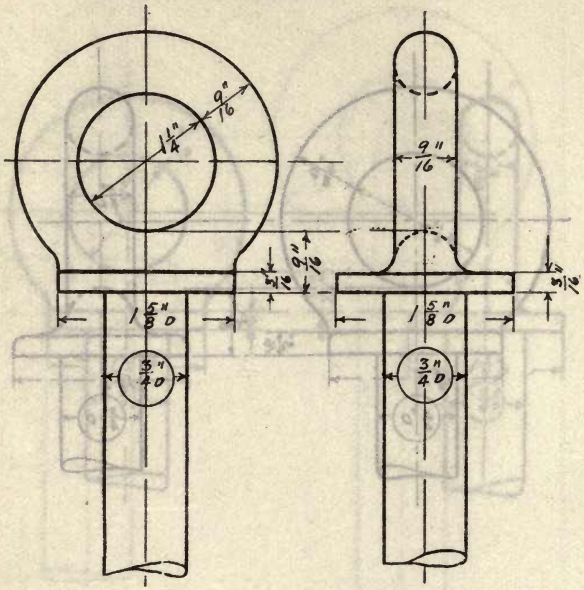

BOLT, EYE, COLLAR, 3/4″

Eye, 1/4″ Length, open die

Weight, lbs. **Die number, 1061-P**
Former die number, (11)

NOT STANDARD STOCK

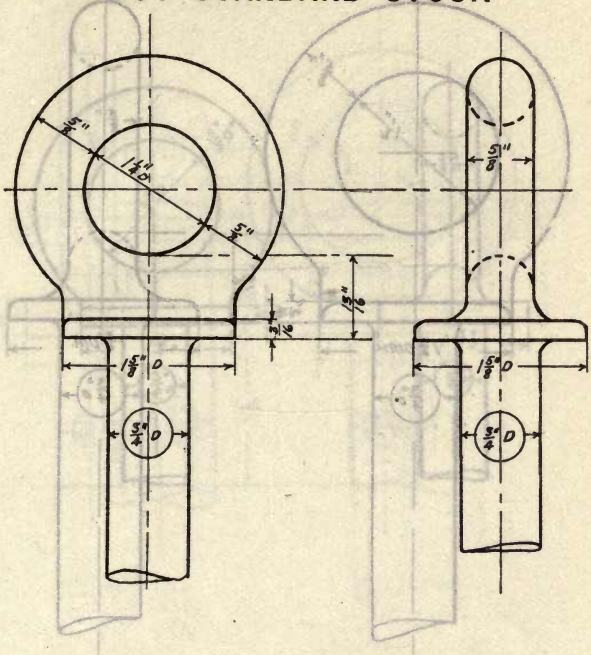

BOLT, EYE, COLLAR, 3/4″

Eye, 1 1/4″ Length, open die

Weight, lbs. **Die number, 1062-B**
Former die number, (9)

NOT STANDARD STOCK

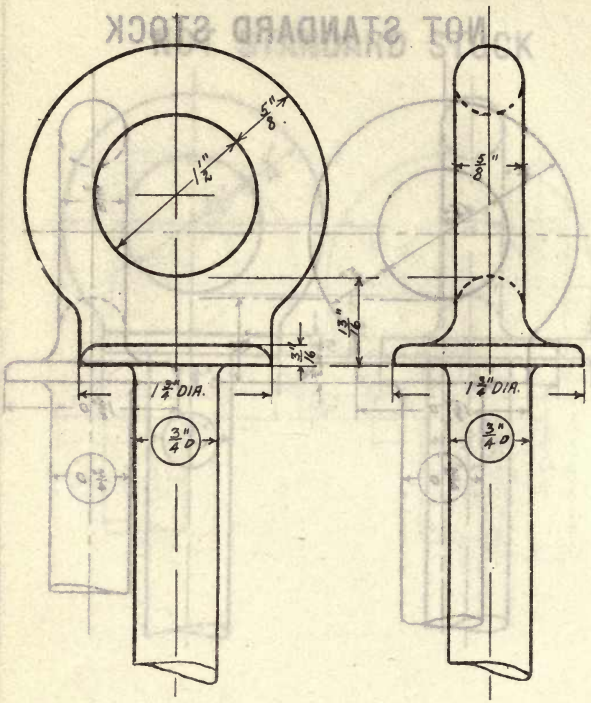

BOLT, EYE, COLLAR, 3/4″

Eye, 1 1/2″ Length, open die

Weight, lbs. **Die number, 1063-B**
Former die number, (19)

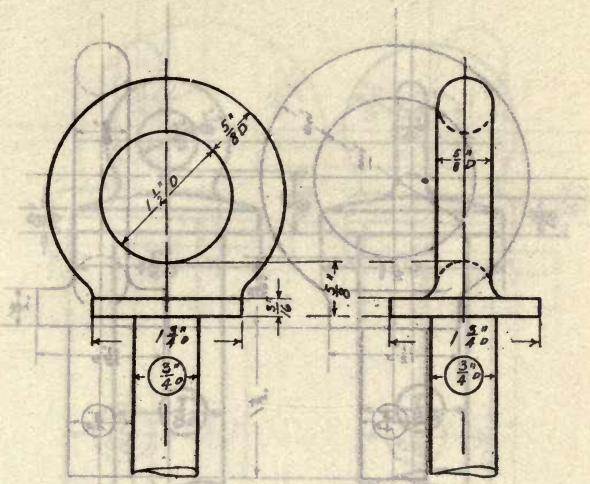

BOLT, EYE, COLLAR, 3/4″

Eye, 1 1/2″ Length, open die

Weight (steel), lbs. Die number, 1064-PMNY
Former die numbers, (12) (1-12) (1-12) (371)

NOT STANDARD STOCK

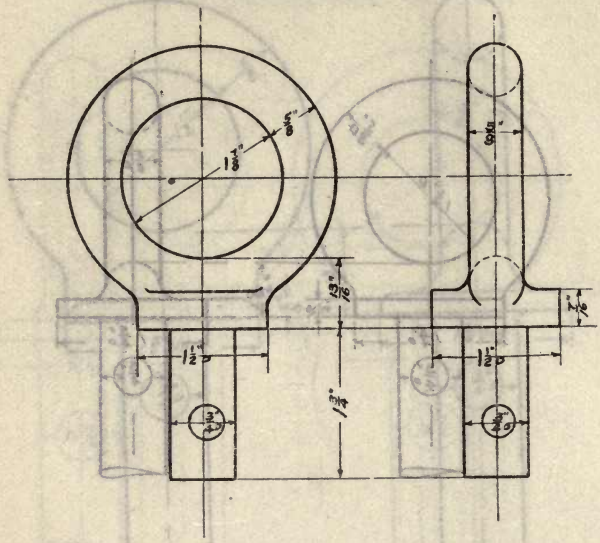

BOLT, EYE, COLLAR, 3/4″

Eye, 1 7/8″ Length, 1 3/4″

Weight, lbs. Die number, 1065-Y
Former die number, (1031)

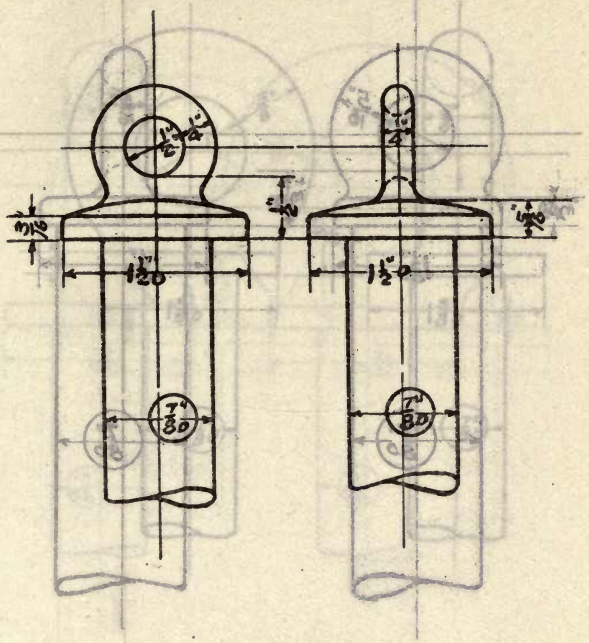

BOLT, EYE, COLLAR, 7/8″

Eye, 1/2″ , Length, open die

Weight (steel), lbs. Die number, 1066-Y
Former die number, (192)

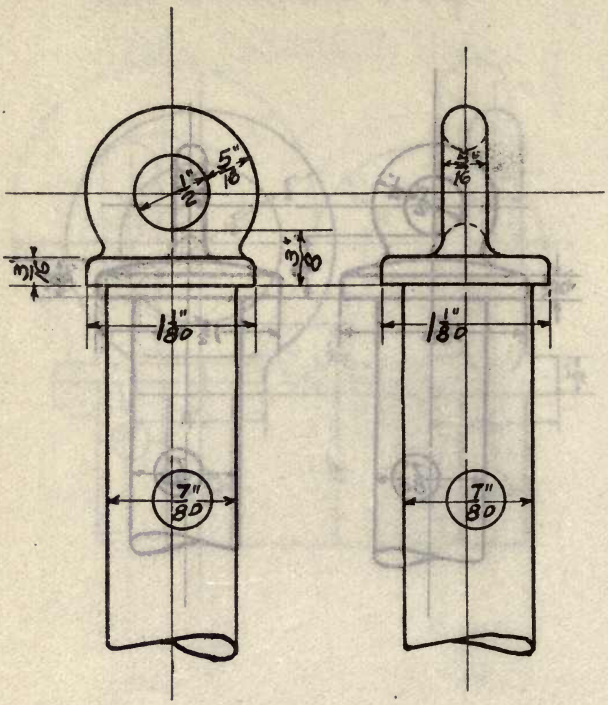

BOLT, EYE, COLLAR, 7/8″

Eye, 1/2″ Length, open die

Weight, lbs. Die number, 1067-MN
Former die numbers, (3-20) (3-20)

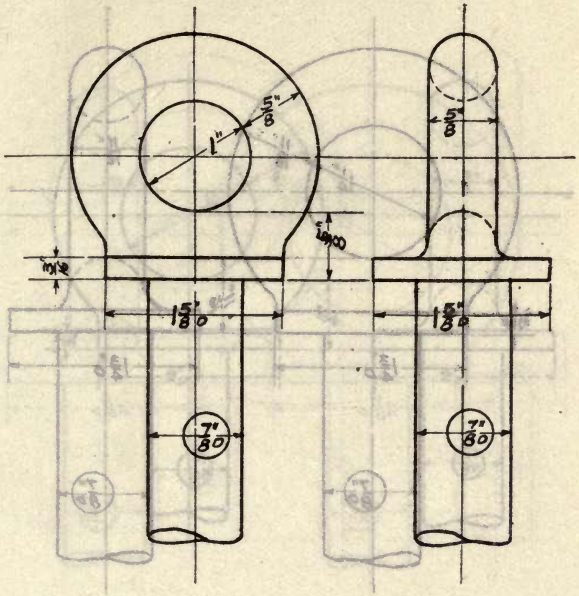

BOLT, EYE, COLLAR, 7/8″

Eye, 1″ Length, open die

Weight (steel), lbs. Die number, 1068-PBMNY
Former die numbers, (13) (104) (1-13) (1-13) (24)

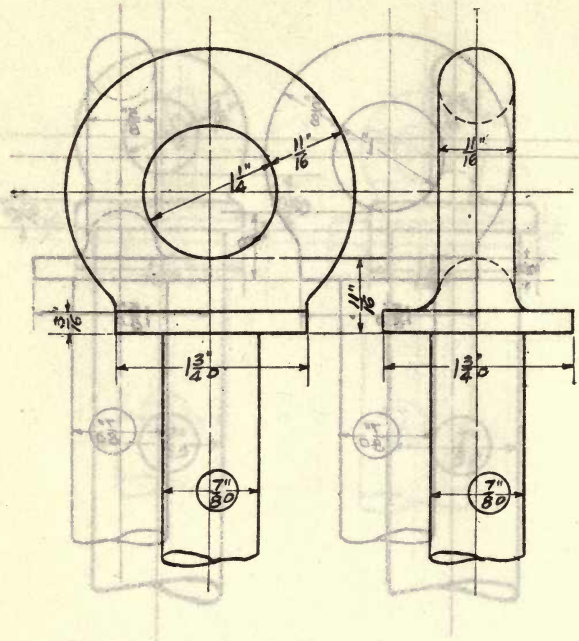

BOLT, EYE, COLLAR, 7/8"

Eye, 1 1/4" **Length, open die**

Weight (steel), lbs. **Die number, 1069-YM**
Former die number, (25)

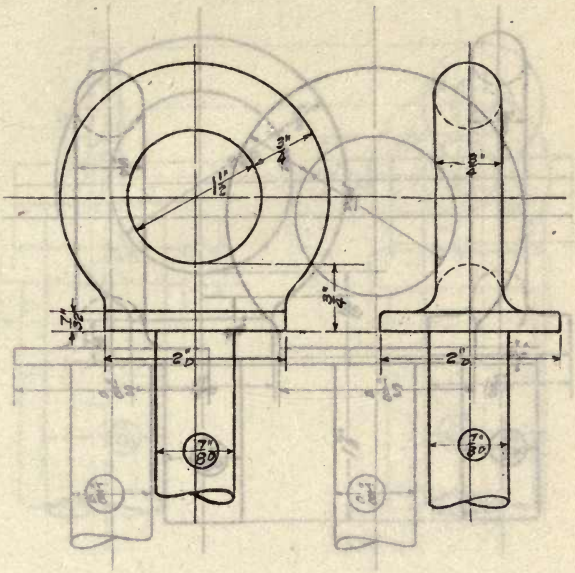

BOLT, EYE, COLLAR, 7/8″

Eye, 1-1/2″ Length, open die

Weight, lbs. Die number, 1070-MN
Former die numbers, (1-15) (1-15)

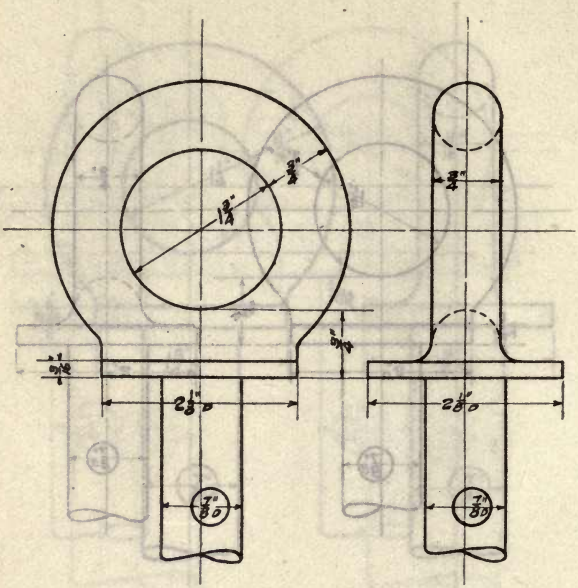

BOLT, EYE, COLLAR, 7/8″

Eye, 1 3/4″ Length, open die

Weight (steel), lbs. Die number, 1071-Y
Former die number, (372)

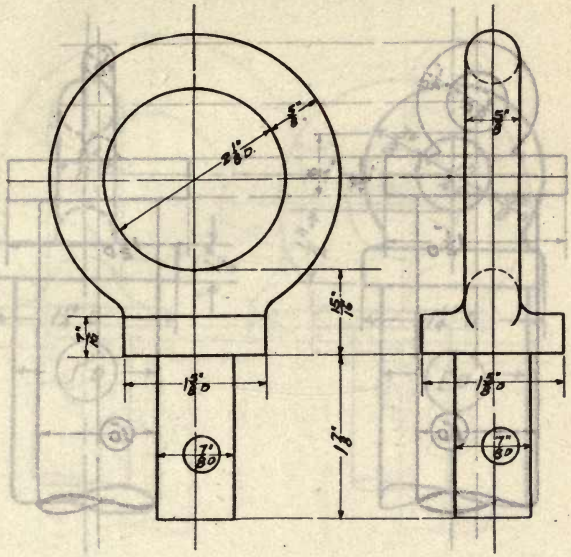

BOLT, EYE, COLLAR, 7/8″

Eye, 2 1/8″ Length, 1 7/8″

Weight, lbs. Die number, 1072-Y
Former die number, (1032)

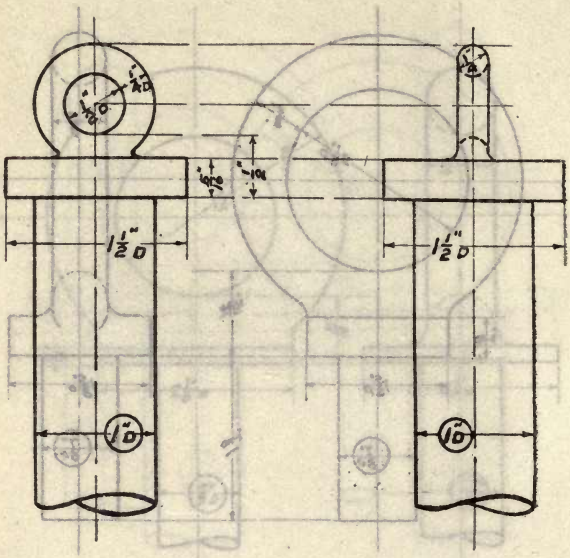

BOLT, EYE, COLLAR, 1″

Eye, 1/2″ Length, open die

Weight (steel), 0.88 lb. Die number, 1073-Y
Former die number, (184)

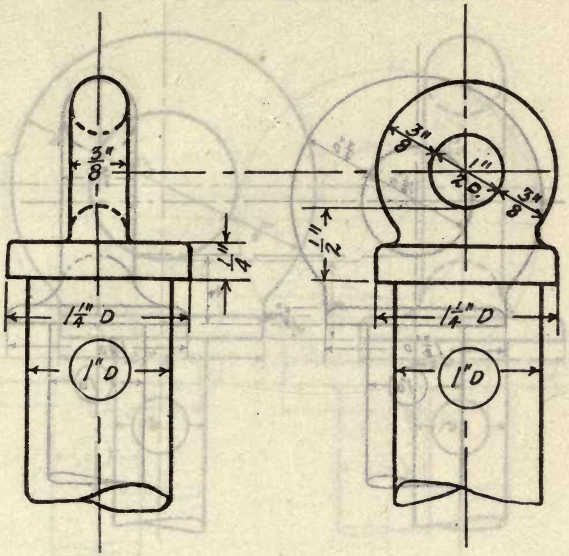

BOLT, EYE, COLLAR, 1″

Eye, 1/2″ Length, open die

Weight, lbs. Die number, 1074-MN
Former die numbers, (3-21) (3-21)

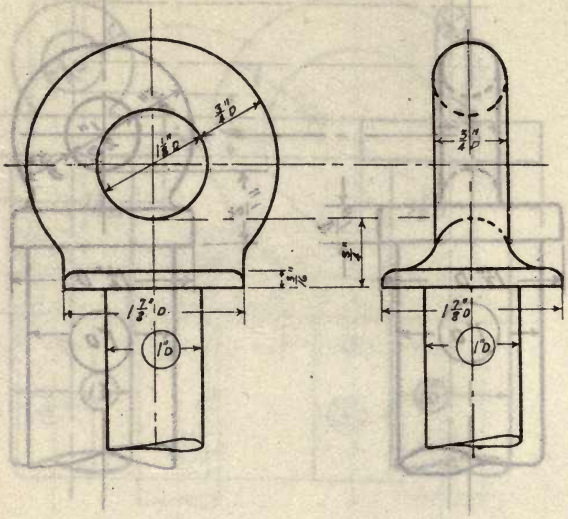

BOLT, EYE, COLLAR, 1″

Eye, 1 1/8″. Length, open die

Weight (steel), lbs. Die number, 1075-NY
Former die numbers, (1-17) (27)

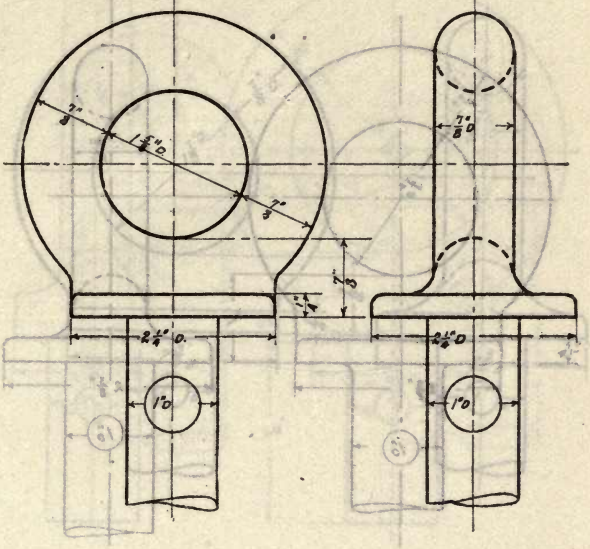

BOLT, EYE, COLLAR, 1"

Eye, 1 5/8" Length, open die

Weight (steel), lbs. Die number, 1076-MY
Former die numbers, (1-19) (373)

NOT STANDARD STOCK

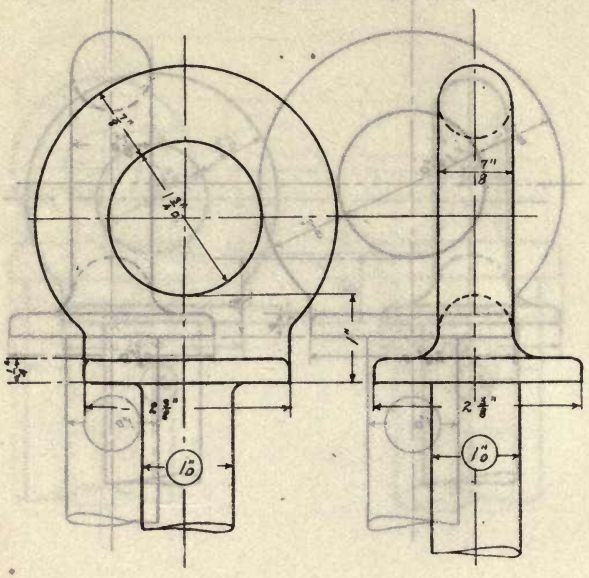

BOLT, EYE, COLLAR, 1″

Eye, 1 3/4″ Length, open die

Weight, lbs. **Die number, 1077-B**
Former die number, (64)

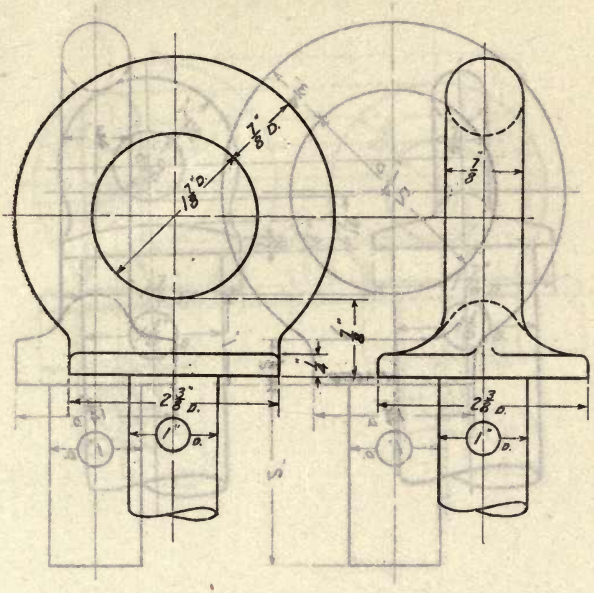

BOLT, EYE, COLLAR, 1″

Eye, 1 7/8″ Length, open die

Weight (steel), lbs. Die number, 1078-NY
Former die numbers, (1-20) (26)

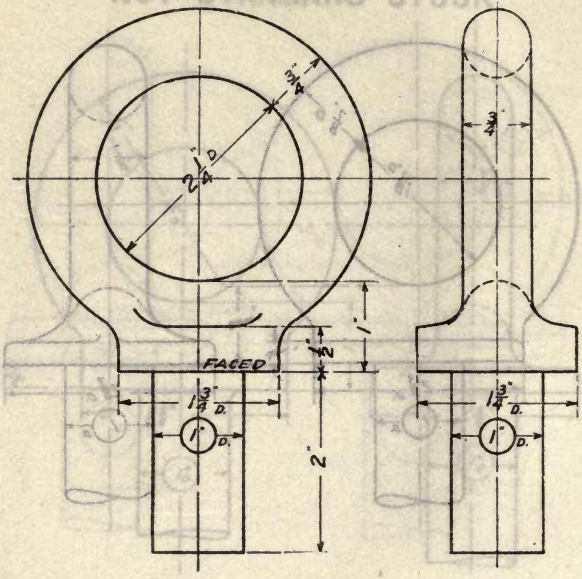

BOLT, EYE, COLLAR, 1″

Eye, 2 1/4″ Length, 2″

Weight, lbs. Die number, 1079-Y
Former die number, (1033)

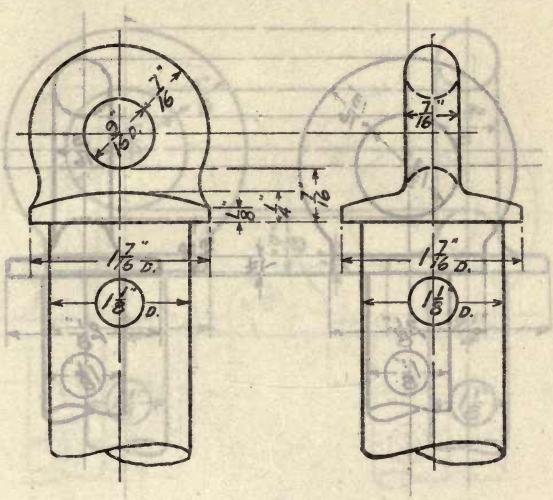

BOLT, EYE, COLLAR, 1 1/8″

Eye, 9/16″ Length, open die

Weight, lbs. Die number, 1080-YM
Former die number, (194)

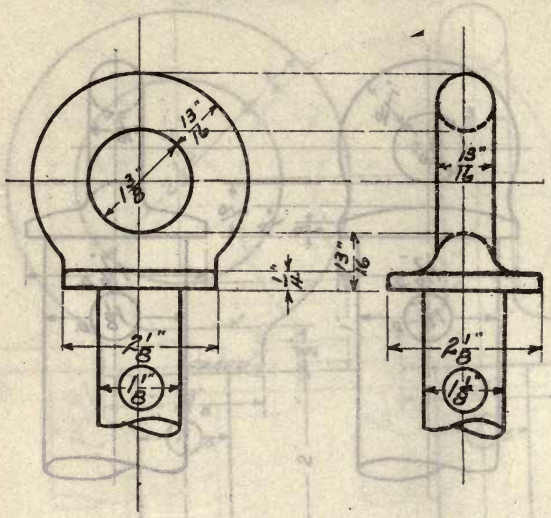

BOLT, EYE, COLLAR, 1 1/8″

Eye, 1 3/8″; Length, open die

Weight (steel), lbs. **Die number, 1081-Y**
Former die number, (28)

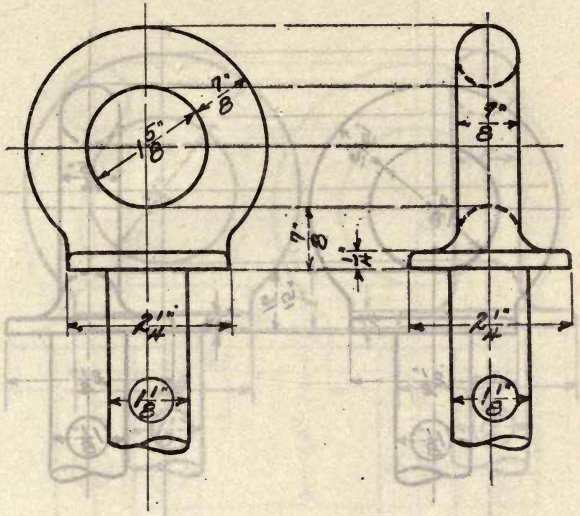

BOLT, EYE, COLLAR, 1 1/8″

Eye, 1 5/8″ Length, open die

Weight, lbs. Die number, 1082-N
Former die number, (1-22)

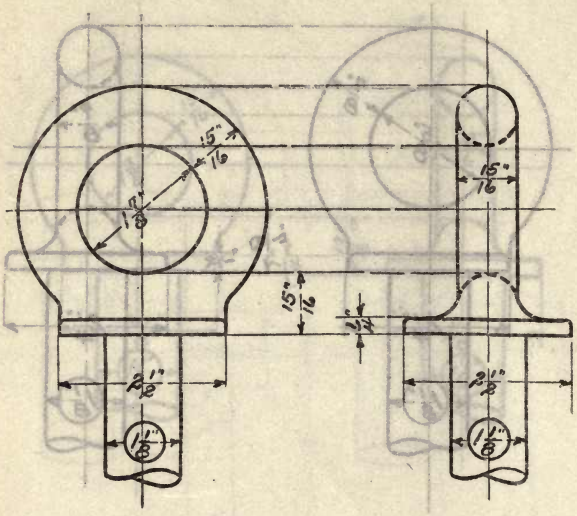

BOLT, EYE, COLLAR, 1 1/8″

Eye, 1 7/8″ Length, open die

Weight, lbs. Die number, 1083-M
Former die number, (1-23)

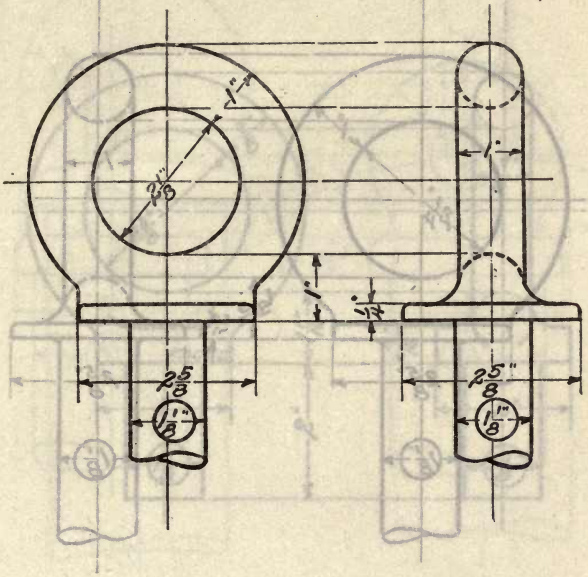

BOLT, EYE, COLLAR, 1 1/8″

Eye, 2 1/8″ Length, open die

Weight (steel), lbs. Die number, 1084-NY
Former die numbers, (1-24) (29)

NOT STANDARD STOCK

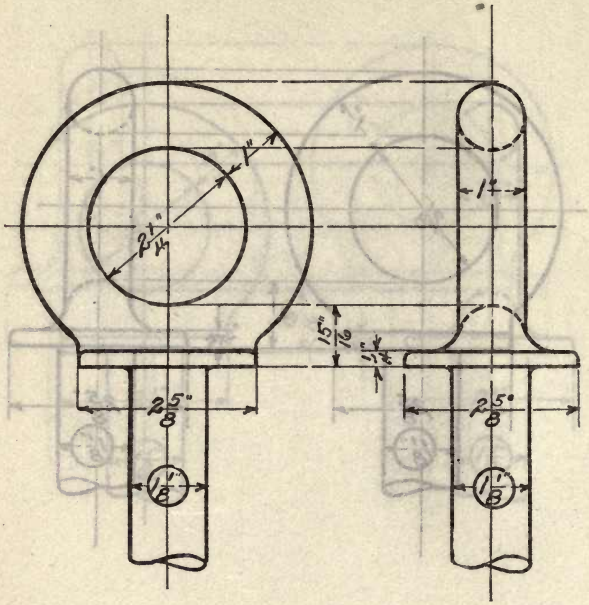

BOLT, EYE, COLLAR, 1 1/8″

Eye, 2 1/4″ Length, open die

Weight, lbs. Die number, 1085-B
Former die number, (1)

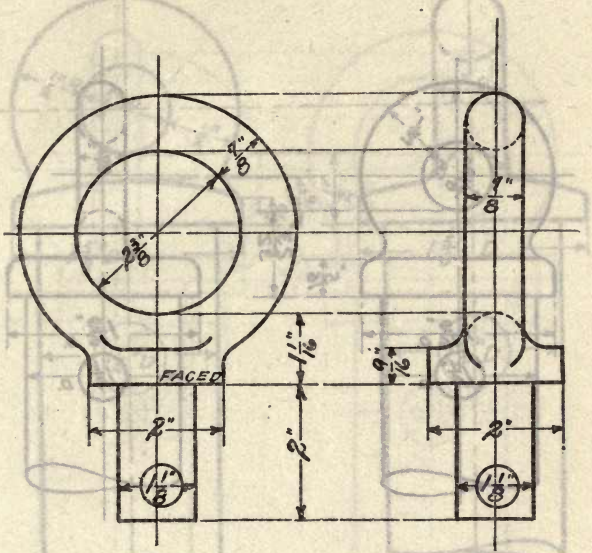

BOLT, EYE, COLLAR, 1 1/8″

Eye, 2 3/8″ Length, 2″

Weight, lbs. Die number, 1086-Y

Former die number, (1034)

NOT STANDARD STOCK

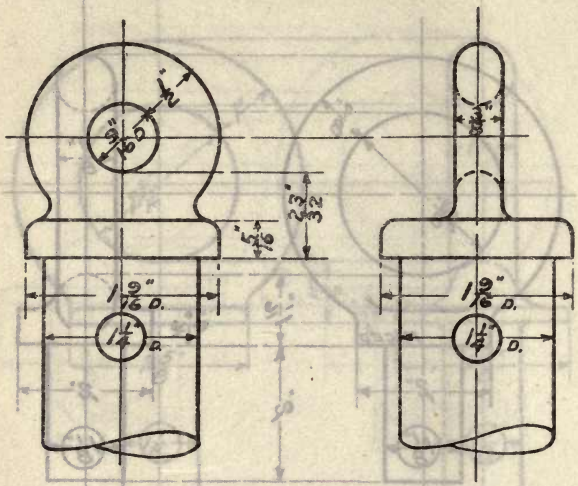

BOLT, EYE, COLLAR, 1 1/4″

Eye, 9/16″ Length, open die

Weight, lbs. Die number, 1087-MN
Former die numbers, (3-50) (3-50)

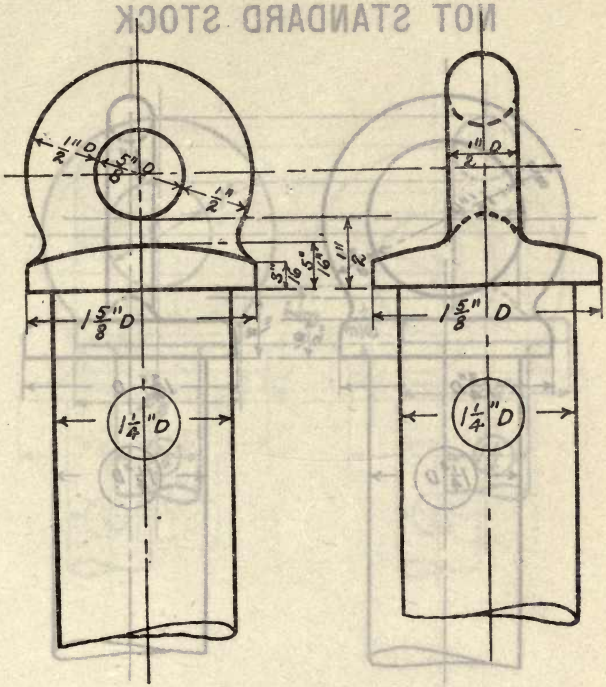

BOLT, EYE, COLLAR, 1 1/4″

Eye, 5/8″ Length, open die

Weight, lbs. **Die number, 1088-Y**
Former die number, (421)

NOT STANDARD STOCK

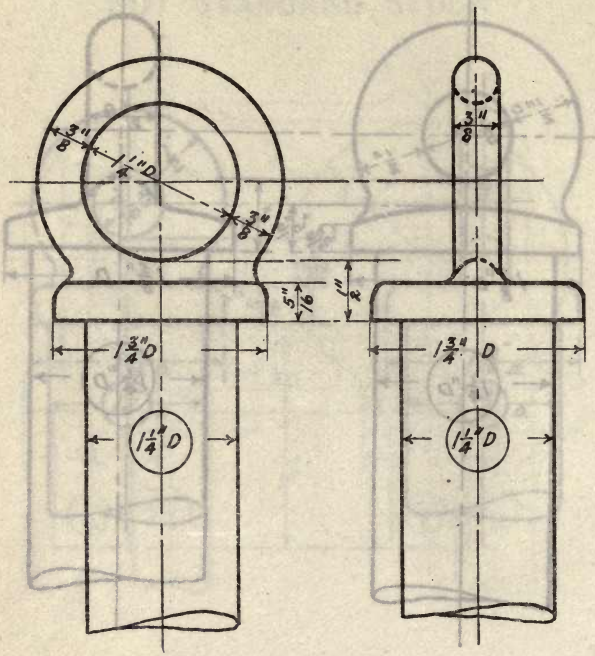

BOLT, EYE, COLLAR, 1 1/4″

Eye, 1 1/4″ Length, open die

Weight, lbs. Die number, 1089-Y
Former die number, (394)

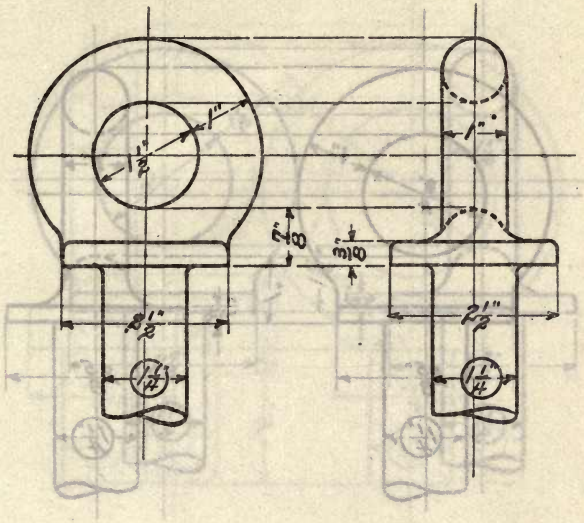

BOLT, EYE, COLLAR, 1 1/4″

Eye, 1 1/2″ Length, open die

Nonstandard
For standard bolt see die No. 1091

Weight, lbs. Die number, 1090-N
Former die number, (1-60)

NOT STANDARD STOCK

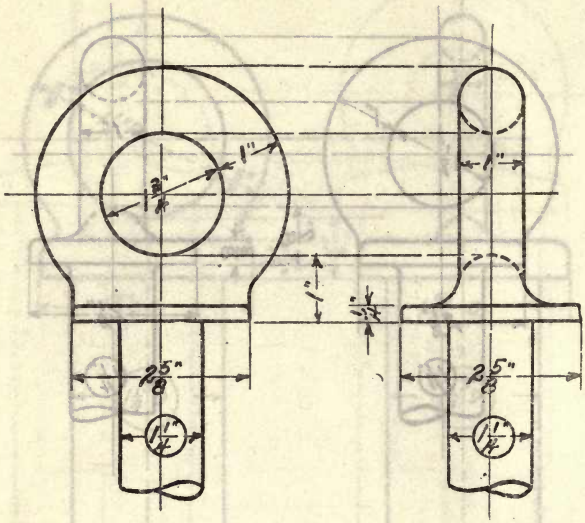

BOLT, EYE, COLLAR, 1 1/4″

Eye, 1 3/4″ Length, open die

Weight, lbs. Die number, 1091-N
Former die number, (1-26)

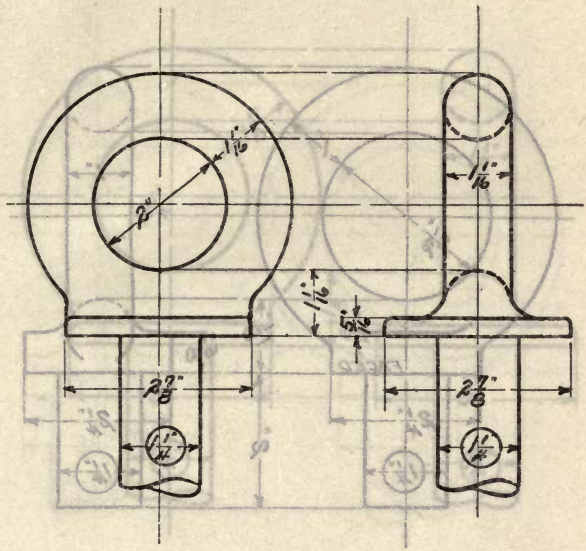

BOLT, EYE, COLLAR, 1 1/4″

Eye, 2″ Length, open die

Weight, lbs. Die number, 1092-M
Former die number, (1-27)

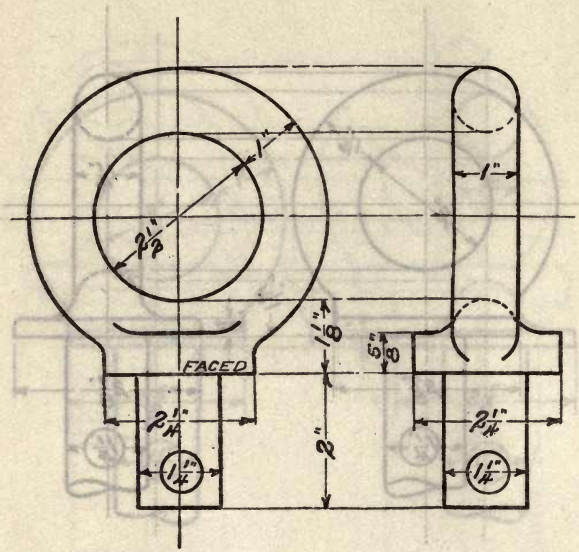

BOLT, EYE, COLLAR, 1 1/4″

Eye, 2 1/2″ Length, 2″

Weight, lbs. Die number, 1093-Y
Former die number, (1035)

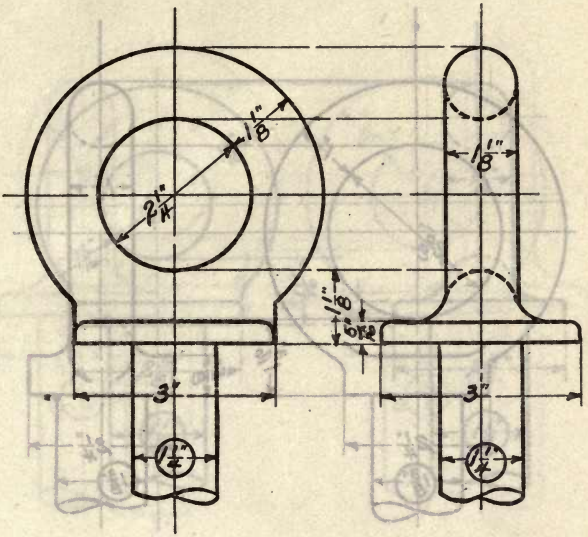

BOLT, EYE, COLLAR, 1 1/4″

Eye, 2 1/4″ Length, open die

Weight (steel), lbs. Die number, 1094-NY
Former die numbers, (1-28) (30)

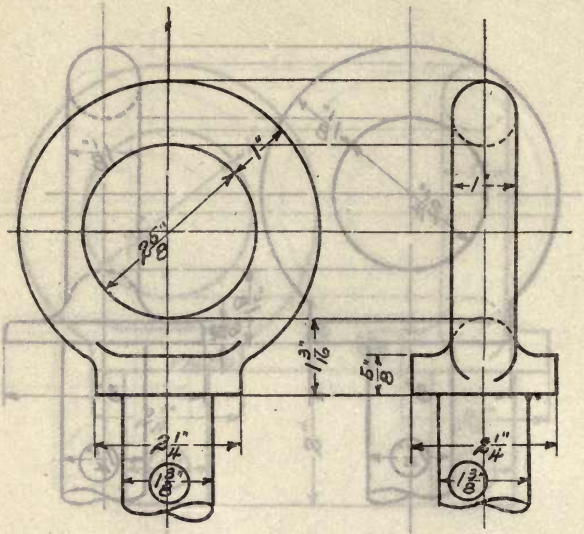

BOLT, EYE, COLLAR, 1 3/8″

Eye, 2 5/8″ Length, open die

Weight, lbs. Die number, 1095-Y
Former die number, (1036)

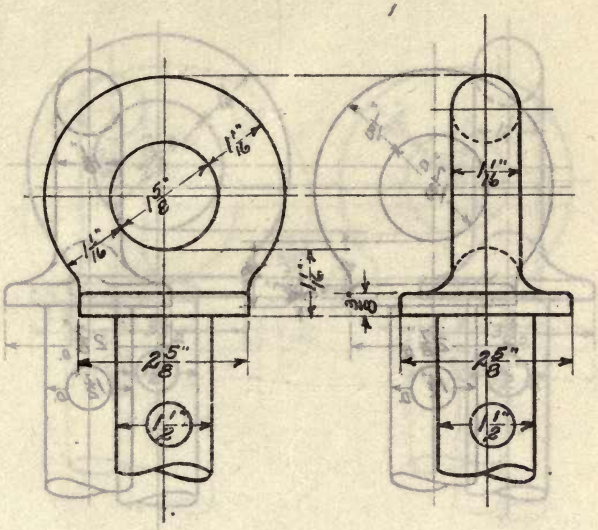

BOLT, EYE, COLLAR, 1 1/2″

Eye, 1 5/8″ Length, open die

Weight (steel), lbs. **Die number, 1096-YM**
Former die number (31)

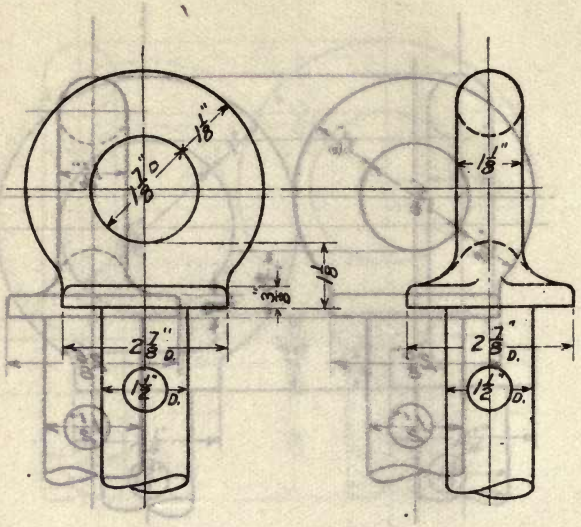

BOLT, EYE, COLLAR, 1 1/2″

Eye, 1 7/8″ Length, open die

Weight, lbs. **Die number, 1097-N**
Former die number, (1-30)

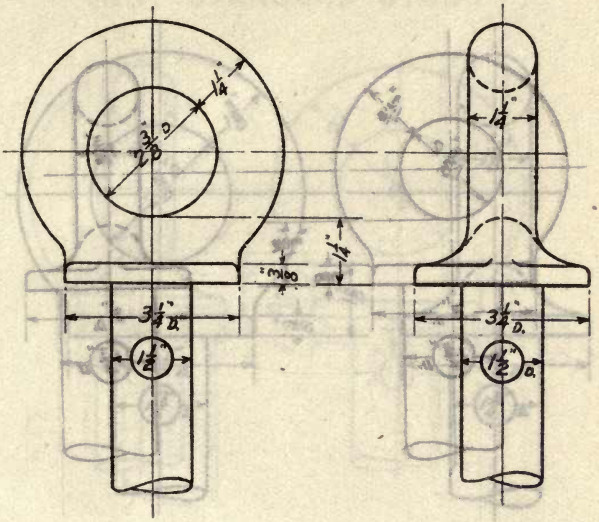

BOLT, EYE, COLLAR, 1 1/2″

Eye, 2 3/8″ Length, open die

Weight (steel), lbs. Die number, 1098-MY
Former die numbers, (1-32) (32)

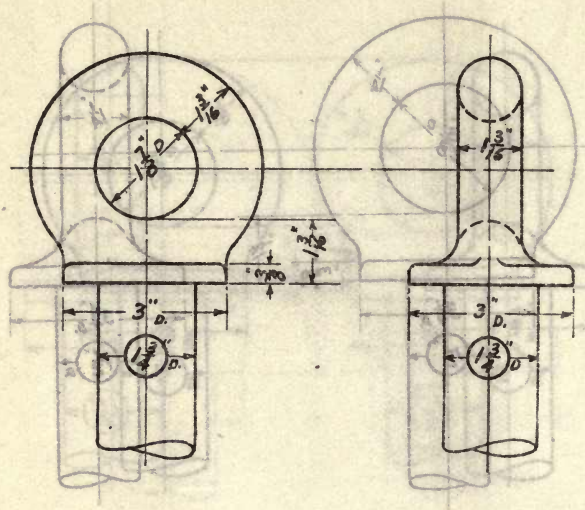

BOLT, EYE, COLLAR, 1 3/4″

Eye, 1 7/8″ Length, open die

Weight, lbs. **Die number, 1099-NM**
Former die number, (1-33)

NOT STANDARD STOCK

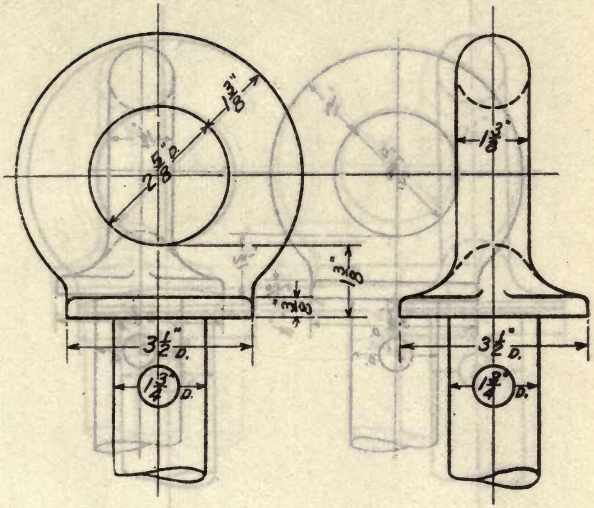

BOLT, EYE, COLLAR, 1 3/4″

Eye, 2 5/8″ Length, open die

Weight, lbs. Die number, 1100-MN
Former die numbers, (1-36) (1-36)

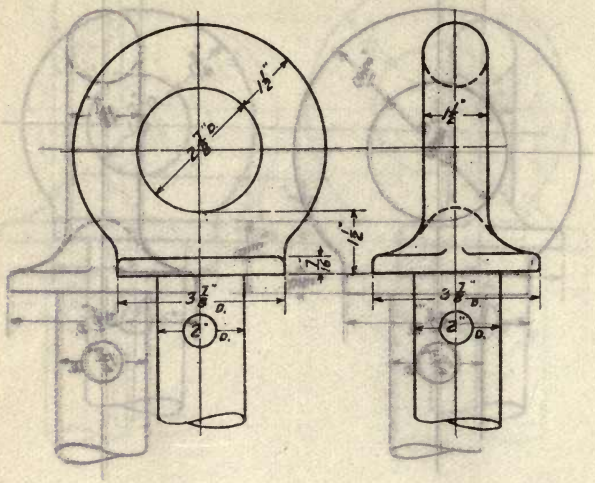

BOLT, EYE, COLLAR, 2″

Eye, 2 7/8″ Length, open die

Weight, lbs. Die number, 1101-MN
Former die numbers, (1-40) (1-40)

NOT STANDARD STOCK

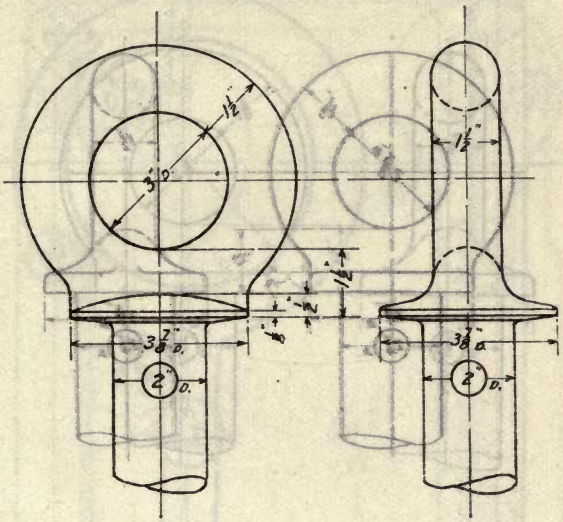

BOLT, EYE, COLLAR, 2″

Eye, 3″ Length, open die

Weight, lbs. Die number, 1102-B
Former die number, (156)

NOT STANDARD STOCK

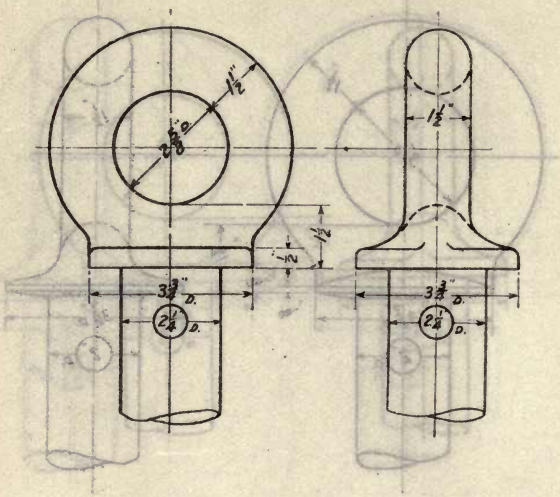

BOLT, EYE, COLLAR, 2 1/4″

Eye, 2 5/8″ Length, open die

Weight, lbs. Die number, 1103-N
Former die number, (1-42)

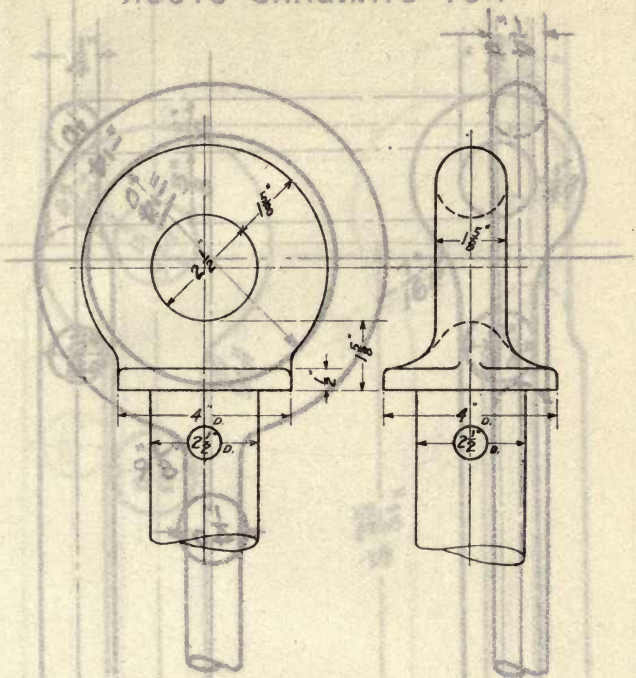

BOLT, EYE, COLLAR, 2 1/2″

Eye, 2 1/2″ Length, open die

Weight, lbs. Die number, 1104-N
Former die number, (1-45)

NOT STANDARD STOCK

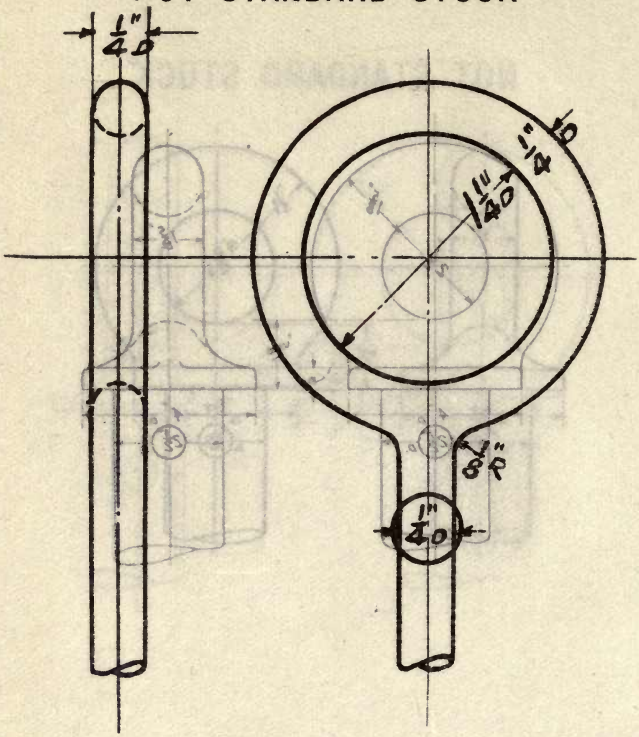

BOLT, EYE, 1/4"

Eye, 1 1/4" Length, open die

Weight, lbs. Die number, 1105-X
Former die number, (1027)

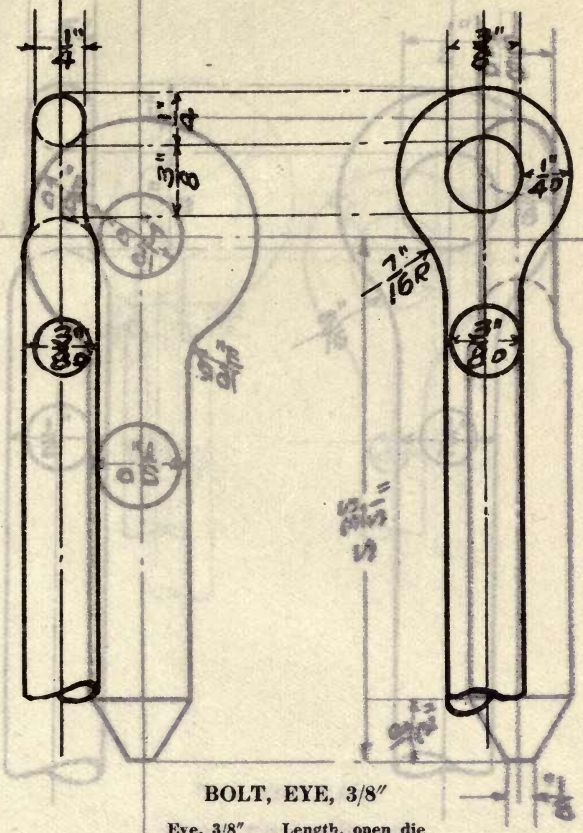

BOLT, EYE, 3/8″

Eye, 3/8″ **Length, open die**

Weight, **lbs.** **Die number, 1106-MN**

Former die numbers, (6-1) (6-1)

NOT STANDARD STOCK

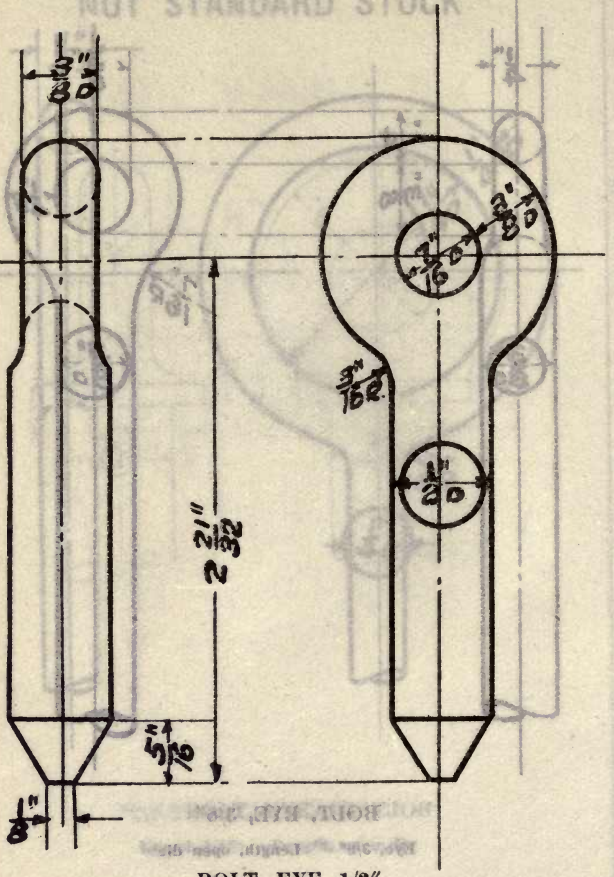

BOLT, EYE, 1/2″

Eye, 7/16″ Length, 2 21/32″

Weight (steel), 0.22 lb. Die number, 1107-Y
Former die number, (402)

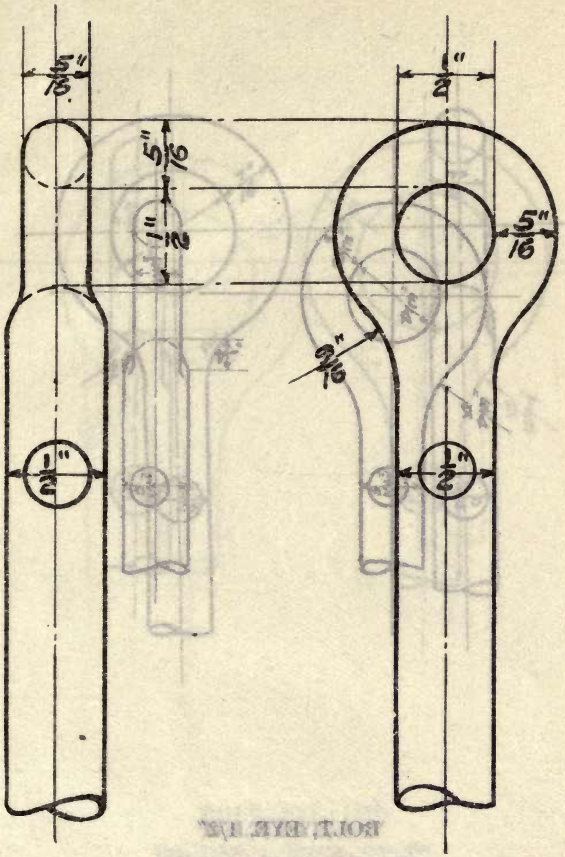

BOLT, EYE, 1/2″

Eye, 1/2″ Length, open die

Weight, lbs. Die number, 1108-MN

Former die numbers, (6-2) (6-2)

NOT STANDARD STOCK

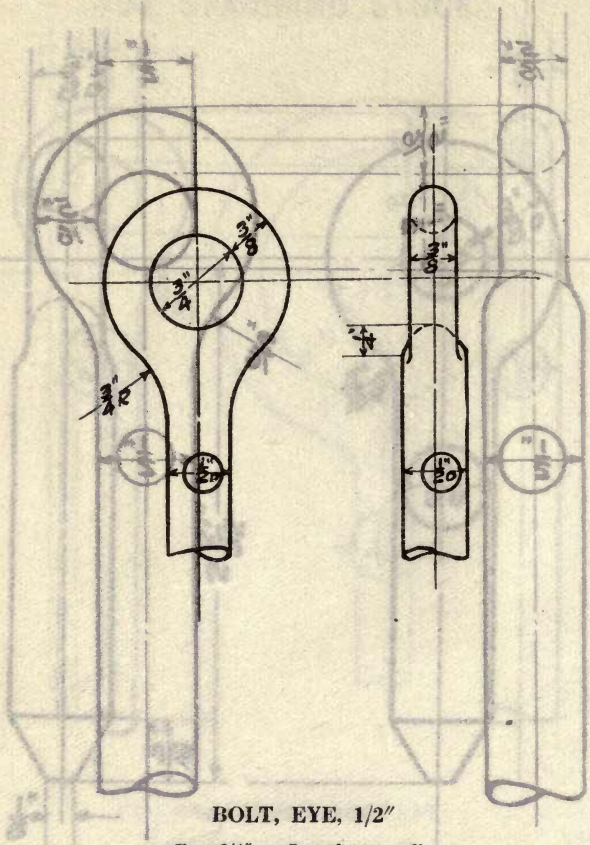

BOLT, EYE, 1/2″

Eye, 3/4″ Length, open die

Weight, lbs. Die number, 1109-MN
Former die numbers, (6-3) (6-3)

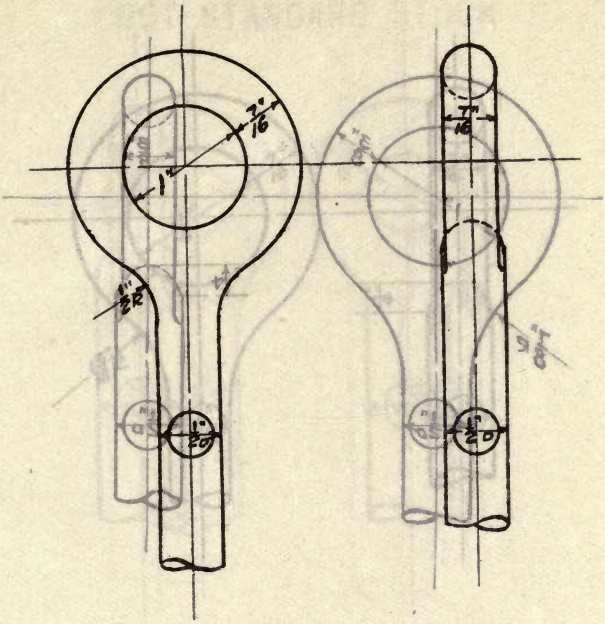

BOLT, EYE, 1/2″

Eye, 1″ . Length, open die

Weight, lbs. Die number, 1110-B
Former die number, (24)

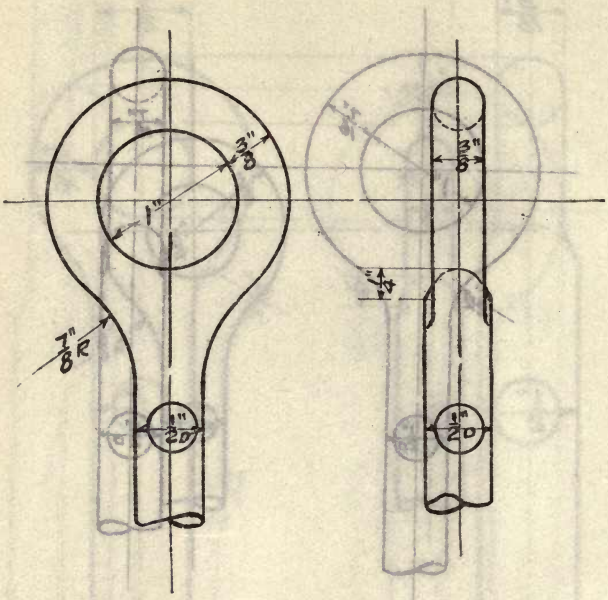

BOLT, EYE, 1/2″

Eye, 1″ Length, open die

Weight, lbs. **Die number, 1111-N**
Former die number, (6-5)

NOT STANDARD STOCK

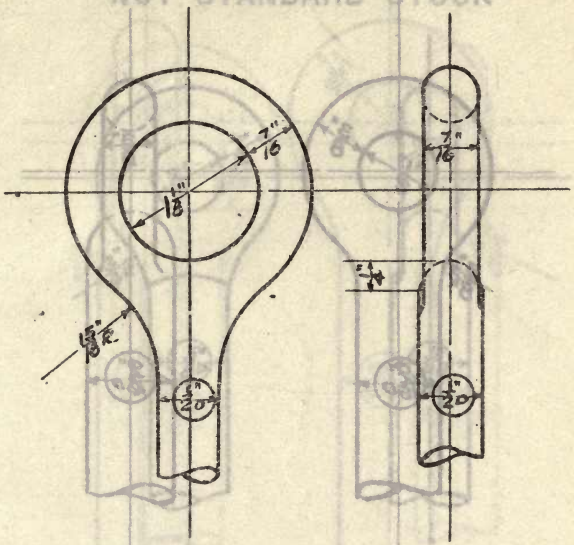

BOLT, EYE, 1/2″

Eye, 1 1/8″ Length, open die

Weight, lbs. **Die number, 1112-MN**
Former die numbers, (6-6) (6-6)

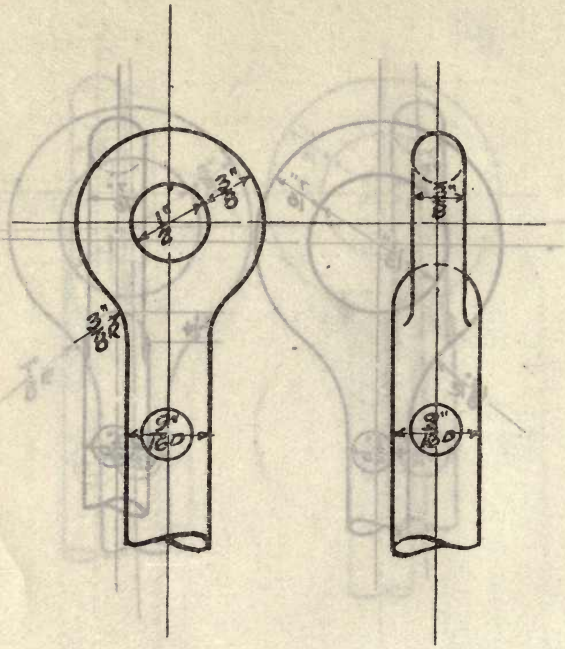

BOLT, EYE, 9/16″

Eye, 1/2″ Length, open die

Weight (steel), lbs. **Die number, 1113-Y**
Former die number, (18)

NOT STANDARD STOCK

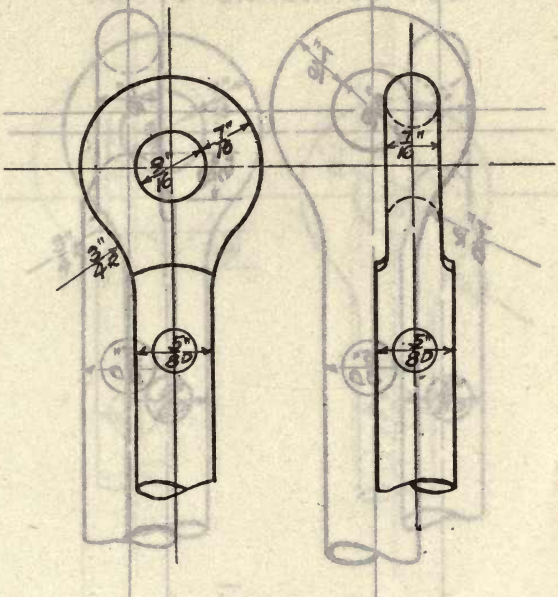

BOLT, EYE, 5/8″

Eye, 9/16″ Length, open die

Weight (steel), lbs. **Die number, 1114-Y**
Former die number, (304)

NOT STANDARD STOCK

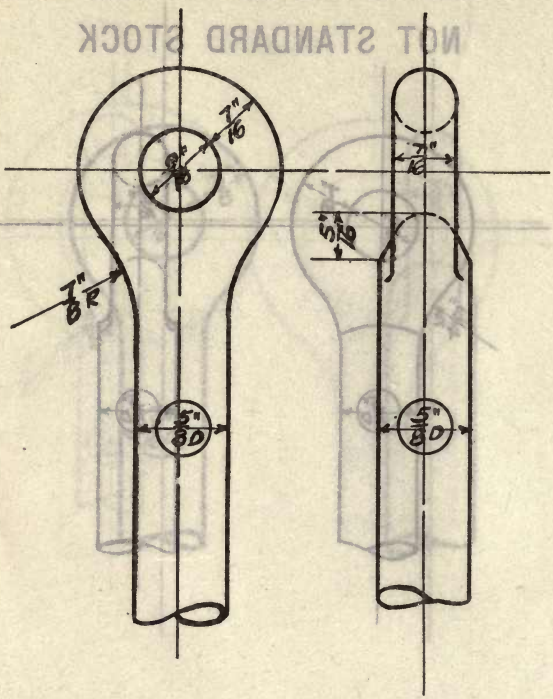

BOLT, EYE, 5/8″

Eye, 9/16″ Length, open die

Weight, lbs. **Die number, 1115-M**
Former die number, (6-8)

NOT STANDARD STOCK

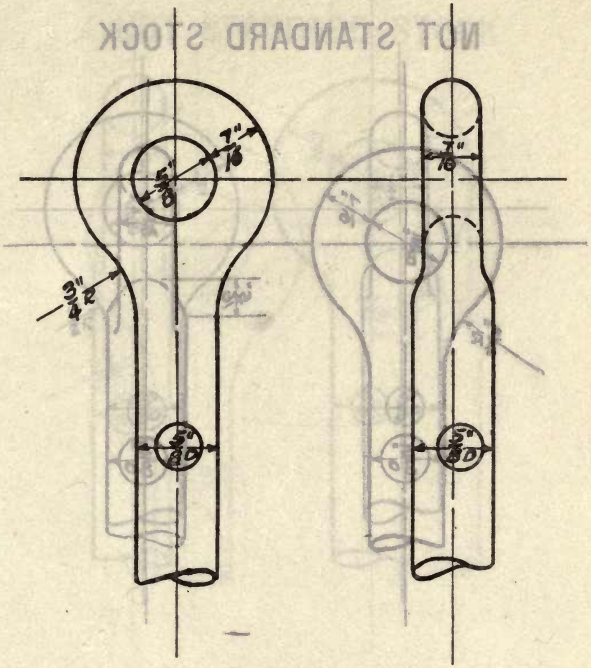

BOLT, EYE, 5/8″

Eye, 5/8″ Length, open die

Weight, lbs. Die number, 1116-B
Former die number, (161)

NOT STANDARD STOCK

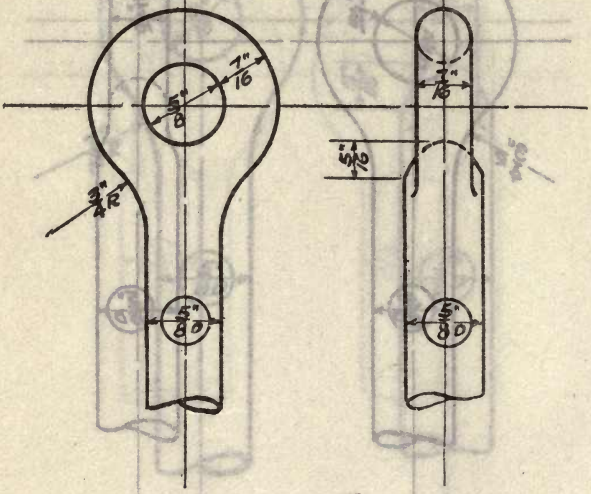

BOLT, EYE, 5/8″

Eye, 5/8″ Length, open die

Weight, lbs. Die number, 1117-N
Former die number, (6-58)

NOT STANDARD STOCK

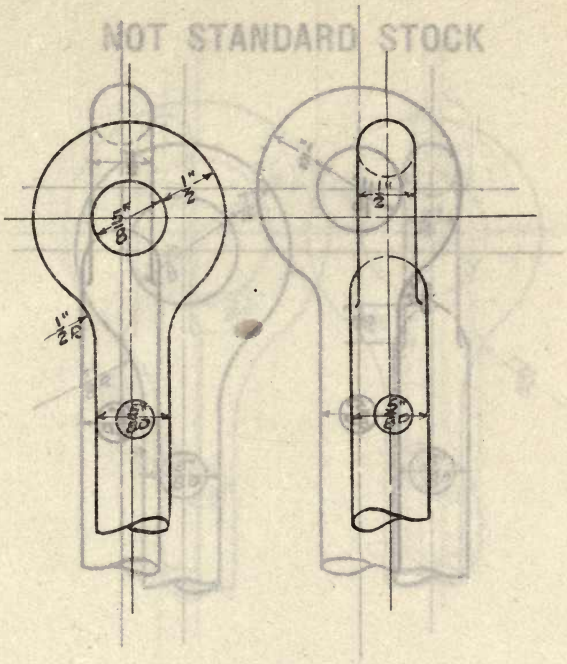

BOLT, EYE, 5/8″

Eye, 5/8″ Length, open die

Weight (steel), lbs. Die number, 1118-BY
Former die numbers, (151) (33)

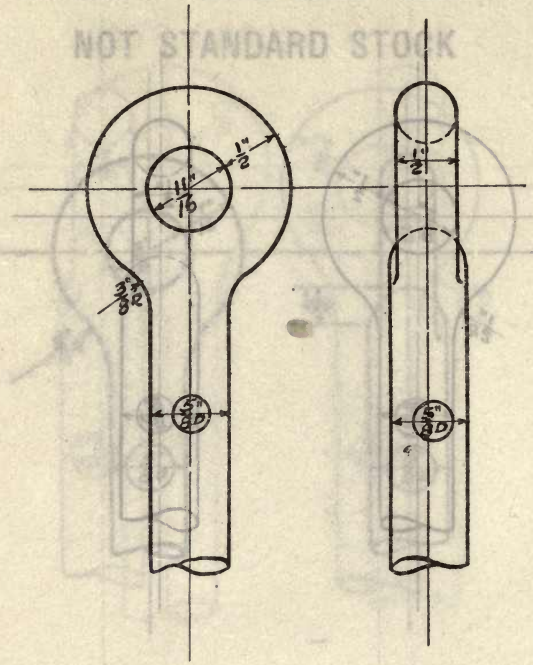

BOLT, EYE, 5/8″

Eye, 11/16″ Length, open die

Weight, lbs. **Die number, 1119-B**
Former die number, (18)

NOT STANDARD STOCK

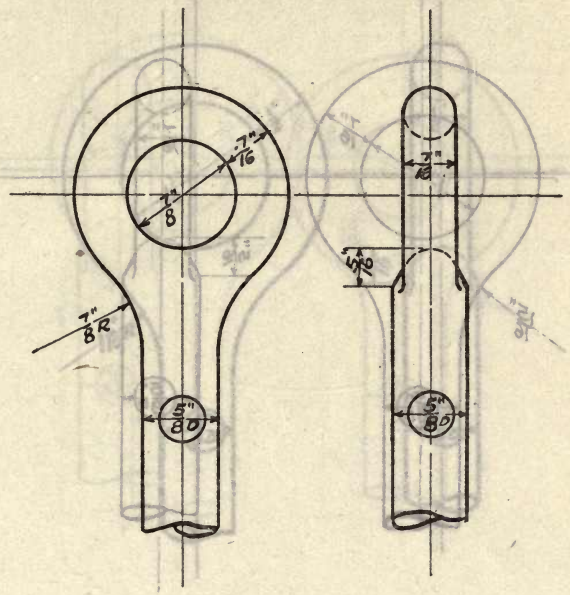

BOLT, EYE, 5/8″

Eye, 7/8″ Length, open die

Weight, lbs. Die number, 1120-M
Former die number, (6-7)

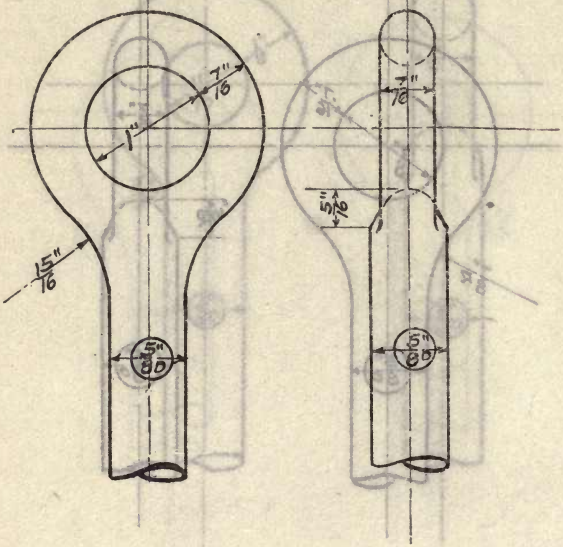

BOLT, EYE, 5/8″

Eye, 1″ . Length, open die .

Weight, lbs. Die number, 1121-N
Former die number, (6-8)

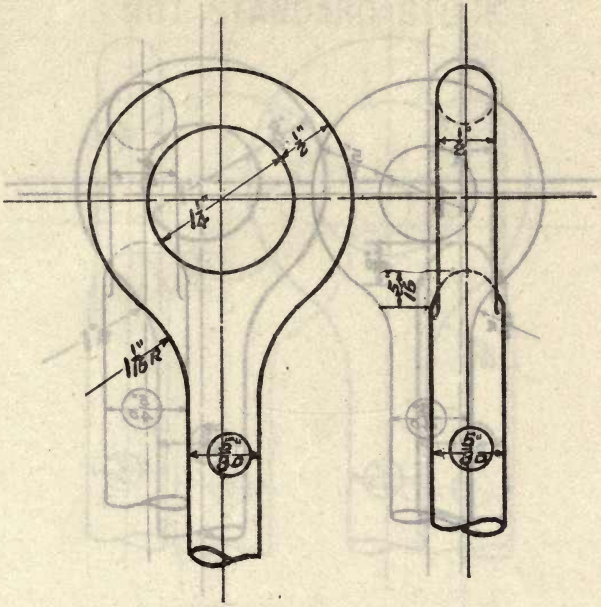

BOLT, EYE, 5/8″

Eye, 1 1/4″, Length, open die

Weight, lbs. Die number, 1122-N
Former die number, (6-10)

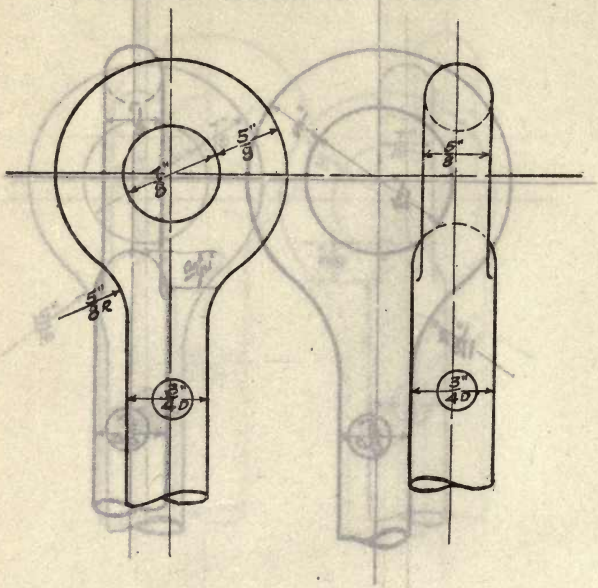

BOLT, EYE, 3/4″

Eye, 7/8″ dia. Length, open die

Weight (steel), lbs. Die number, 1123-Y
Former die number, (34)

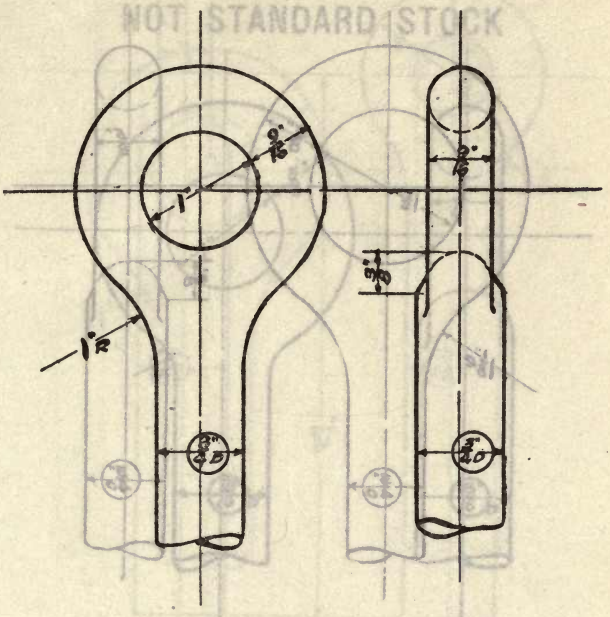

BOLT, EYE, 3/4″

Eye, 1″. Length, open die

Weight, lbs. Die number, 1124-MN
Former die numbers, (6-11) (6-11)

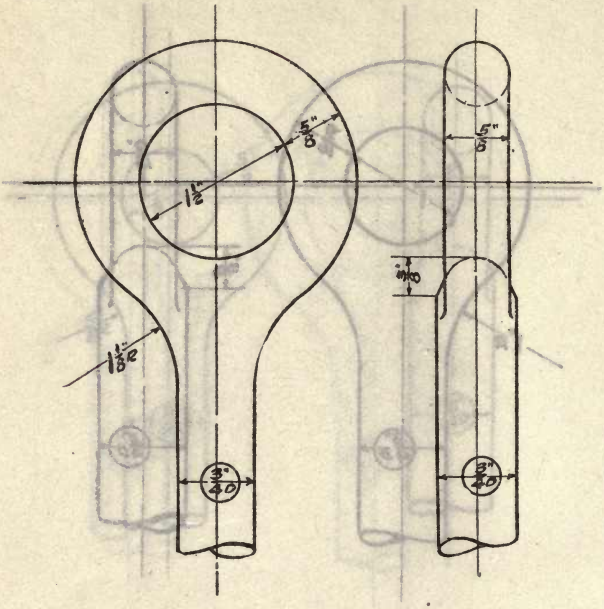

BOLT, EYE, 3/4″

Eye, 1 1/2″ Length, open die

Weight, lbs. Die number, 1125-MN
Former die numbers, (6-14) (6-14)

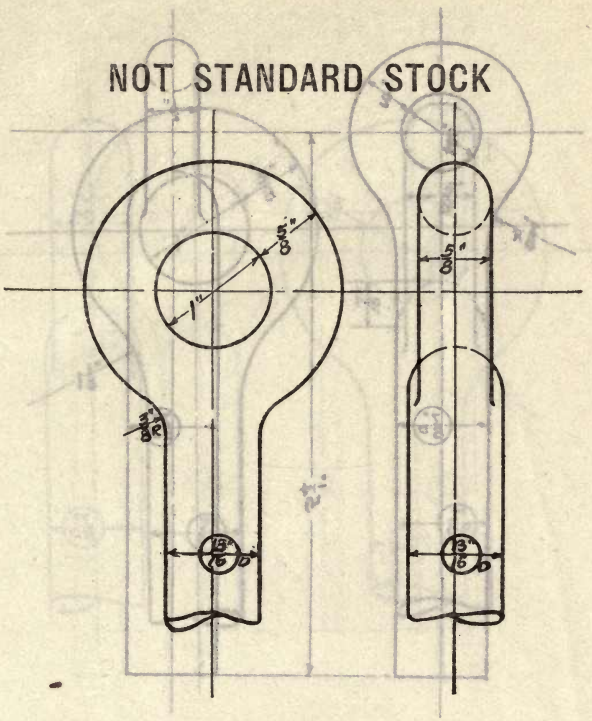

BOLT, EYE, 13/16″

Eye, 1″ Length, open die

Weight, lbs. Die number, 1126-B
Former die number, (30)

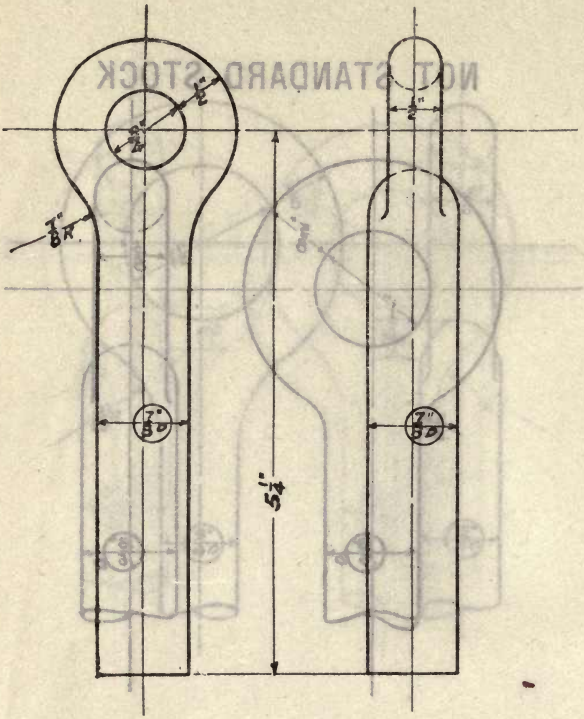

BOLT, EYE, 7/8″

Eye, 3/4″ Length, 5 1/4″

Weight (steel), 1.1 lbs. **Die number, 1127-Y**
Former die number, (46)

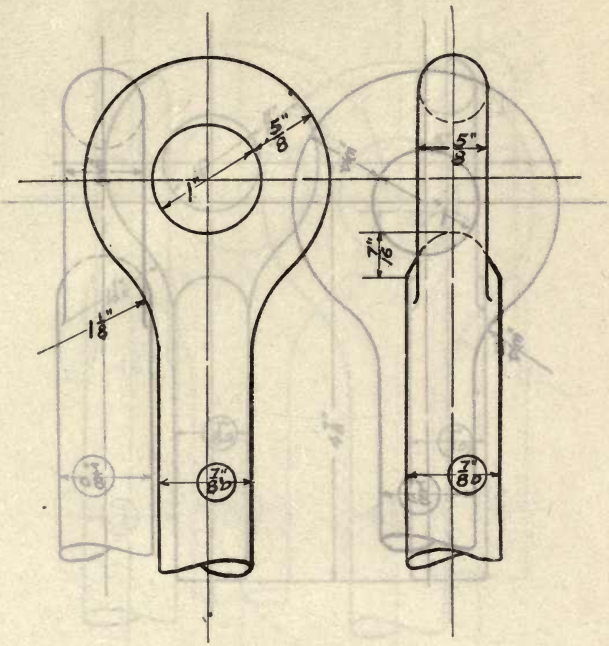

BOLT, EYE, 7/8″

Eye, 1″ Length, open die

Weight, lbs. Die number, 1128-MN
Former die numbers, (6-15) (6-15)

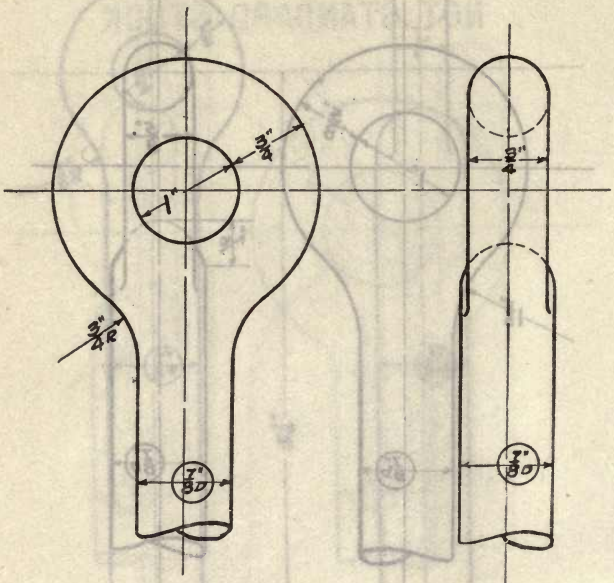

BOLT, EYE, 7/8″

Eye, 1″ Length, open die

Weight (steel), lbs. **Die number, 1129-X**
Former die number, (35)

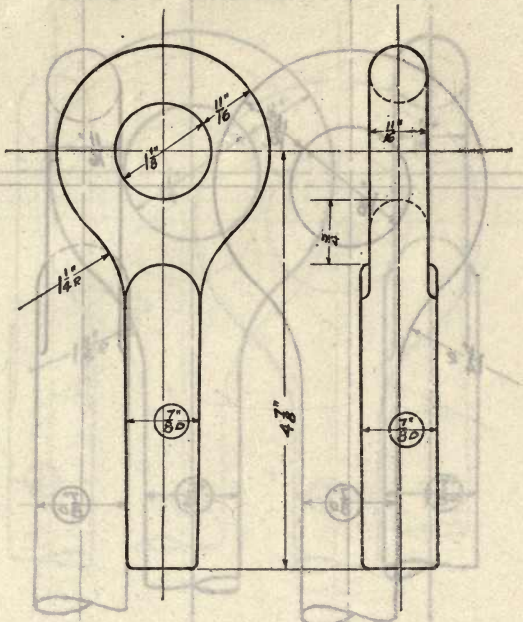

BOLT, EYE, 7/8″

Eye, 1 1/8″ Length, 4 7/8″

Weight (steel), 1.2 lbs. Die number, 1130-MNY
Former die numbers, (4-8) (4-8) (47)

NOT STANDARD STOCK

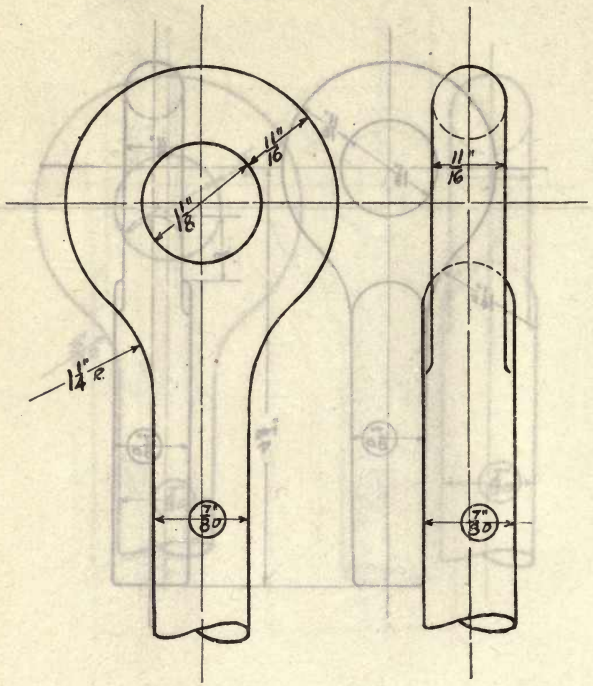

BOLT, EYE, 7/8″

Eye, 1 1/8″ Length, open die

Weight, lbs. Die number, 1131-B
Former die number, (110)

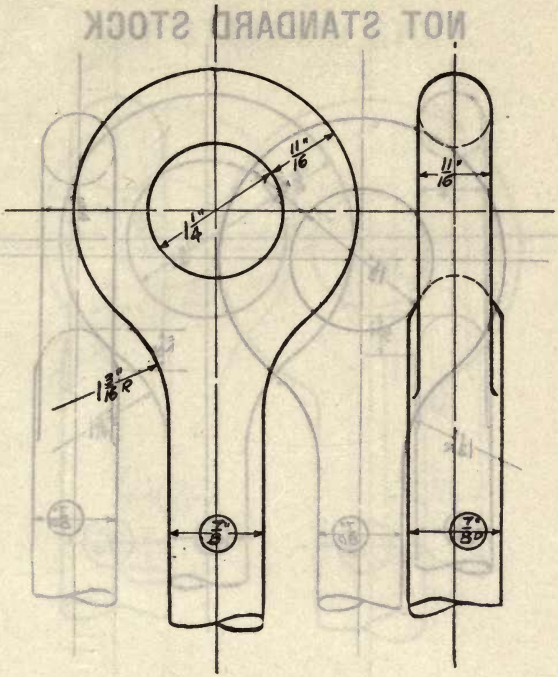

BOLT, EYE, 7/8″

Eye, 1 1/4″ Length, open die

Weight, lbs. Die number, 1132-MN
Former die numbers, (6-16) (6-16)

NOT STANDARD STOCK

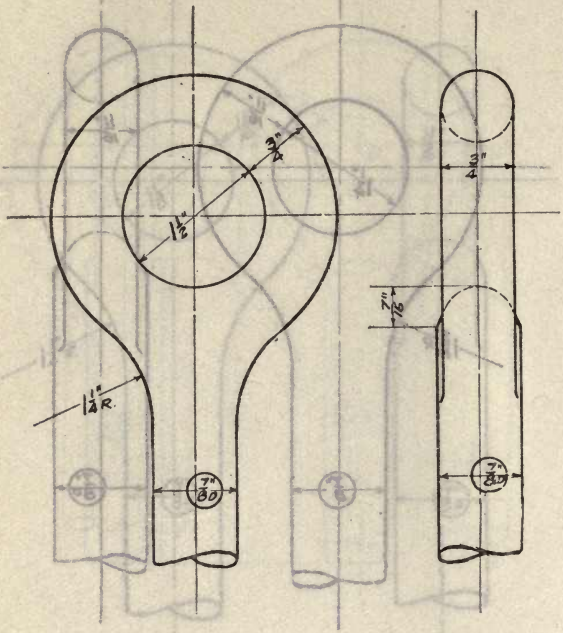

BOLT, EYE, 7/8″

Eye, 1 1/2″ Length, open die

Weight, lbs. Die number, 1133-M
Former die number, (6-17)

NOT STANDARD STOCK

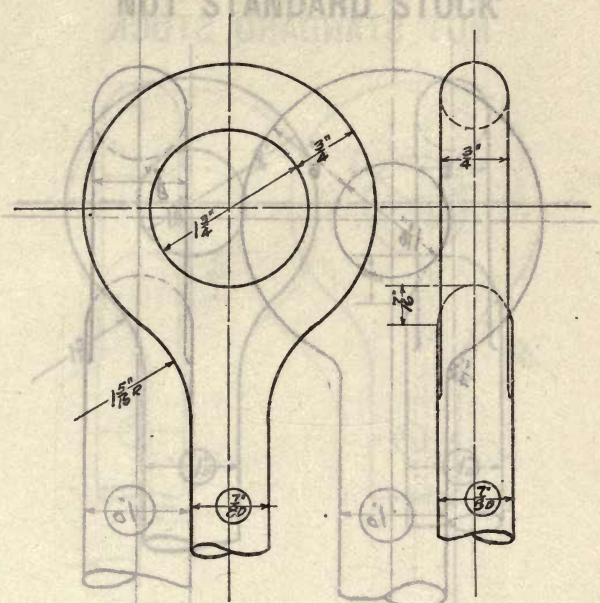

BOLT, EYE, 7/8″

Eye, 1 3/4″ Length, open die

Weight, lbs. **Die number, 1134-N**
Former die number, (6-18)

NOT STANDARD STOCK

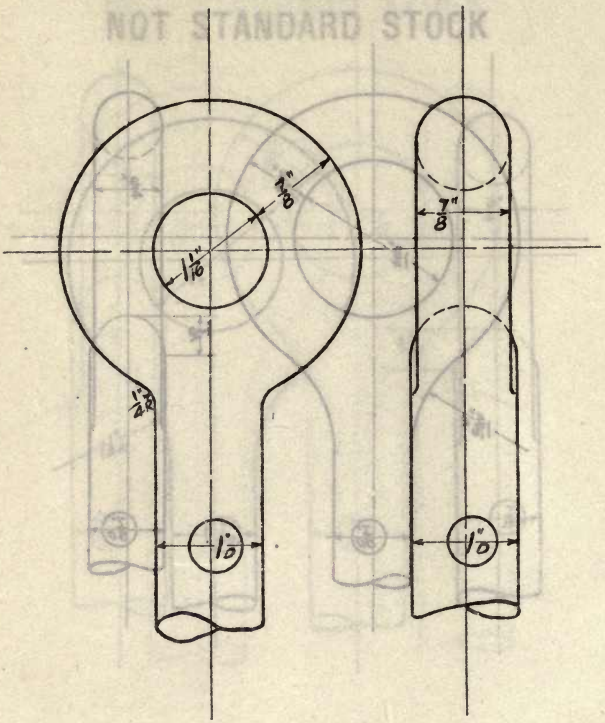

BOLT, EYE, 1″

Eye, 1 1/16″ Length, open die

Weight, lbs. Die number, 1135-B
Former die number, (37)

NOT STANDARD STOCK

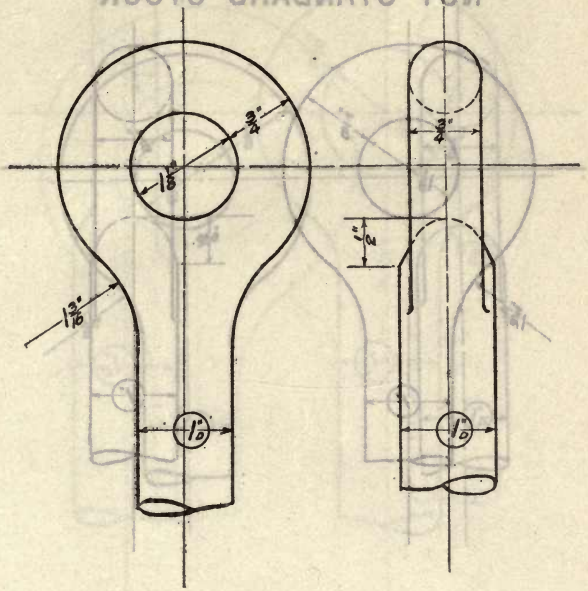

BOLT, EYE, 1″

Eye, 1 1/8″ Length, open die

Weight, lbs. **Die number, 1136-N**
Former die number, (6-19)

NOT STANDARD STOCK

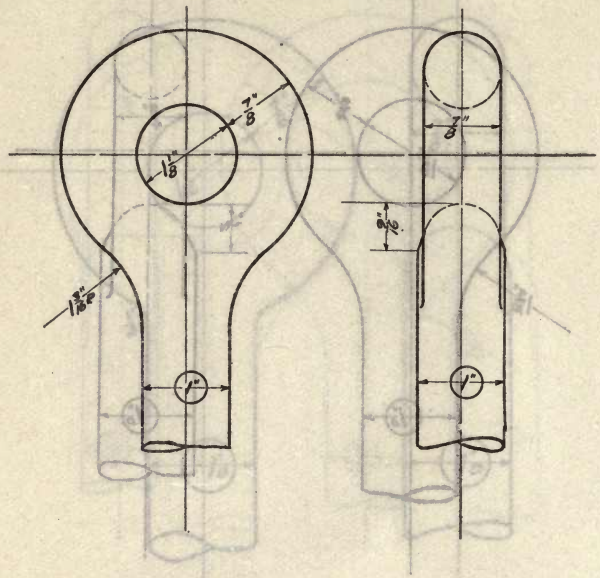

BOLT, EYE, 1″

Eye, 1 1/8″ Length, open die

Weight, lbs. Die number, 1137-MN
Former die numbers, (6-56) (6-56)

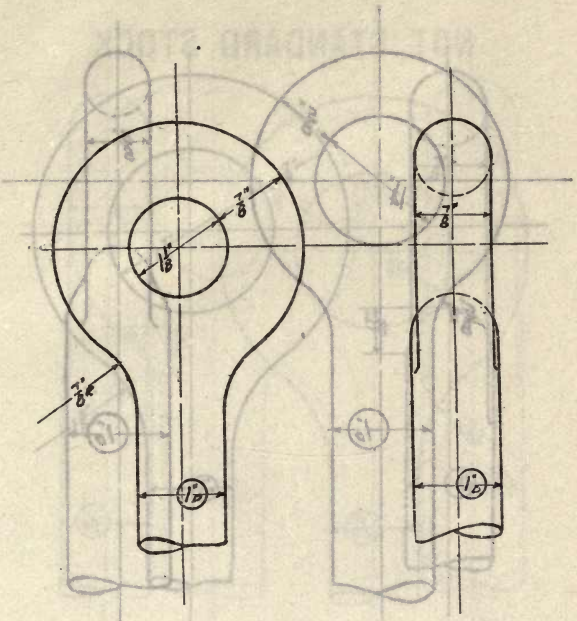

BOLT, EYE, 1″

Eye, 1 1/8″ Length, open die

Weight (steel), lbs. **Die number, 1138-Y**
Former die number, (36)

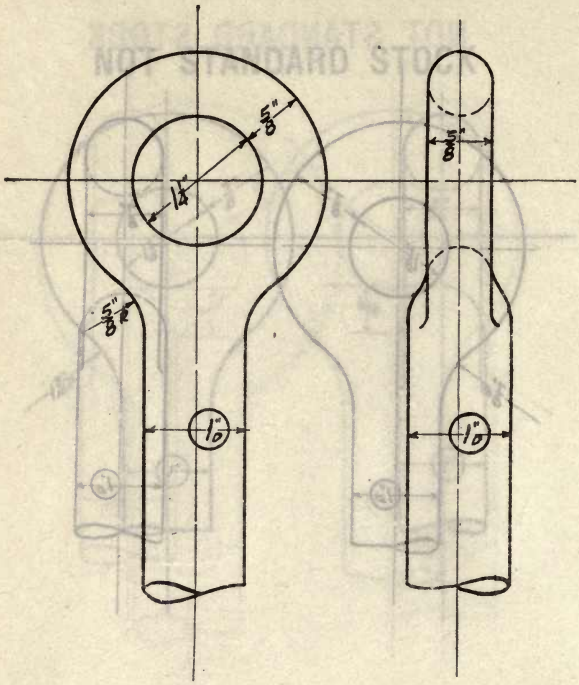

BOLT, EYE, 1″

Eye, 1 1/4″ Length, open die

Weight, lbs. Die number, 1139-MY
Former die numbers, (4-36) (210)

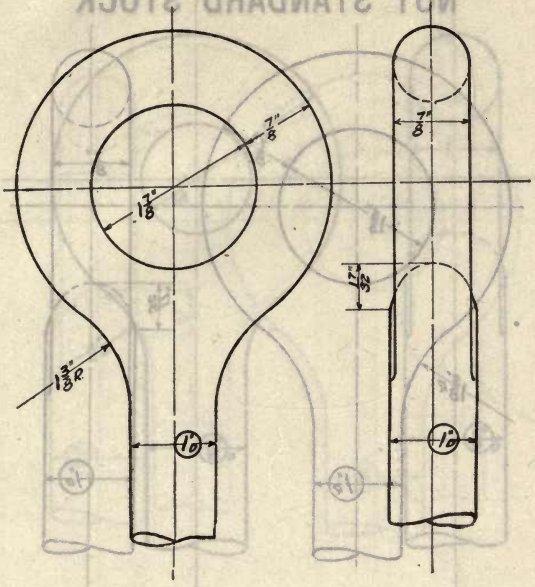

BOLT, EYE, 1″

Eye, 1 7/8″ Length, open die

Weight, lbs. Die number, 1140-N
Former die number, (6-22)

NOT STANDARD STOCK

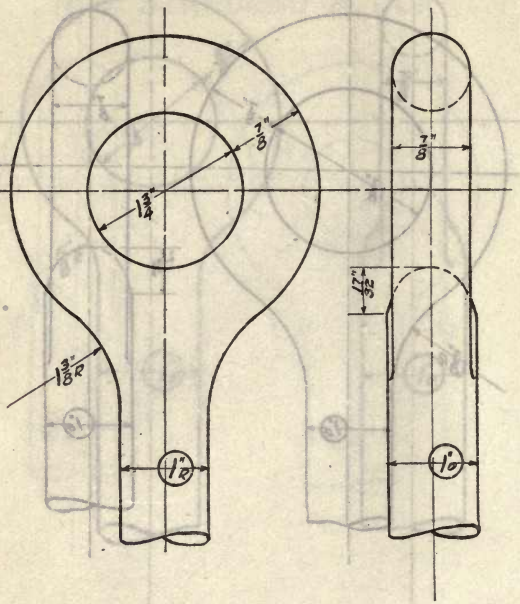

BOLT, EYE, 1″

Eye, 1 3/4″ Length, open die

Weight, lbs. Die number, 1141-M
Former die number, (6-22)

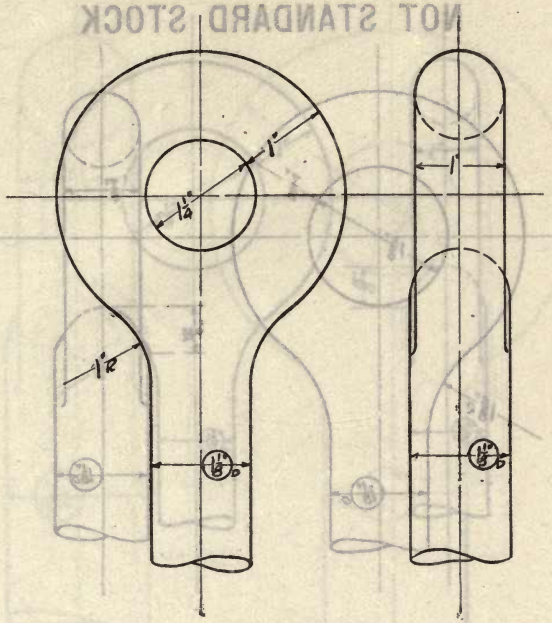

BOLT, EYE, 1 1/8″

Eye, 1 1/4″ Length, open die

Weight (steel), lbs. **Die number, 1142-Y**
Former die number, (37)

NOT STANDARD STOCK

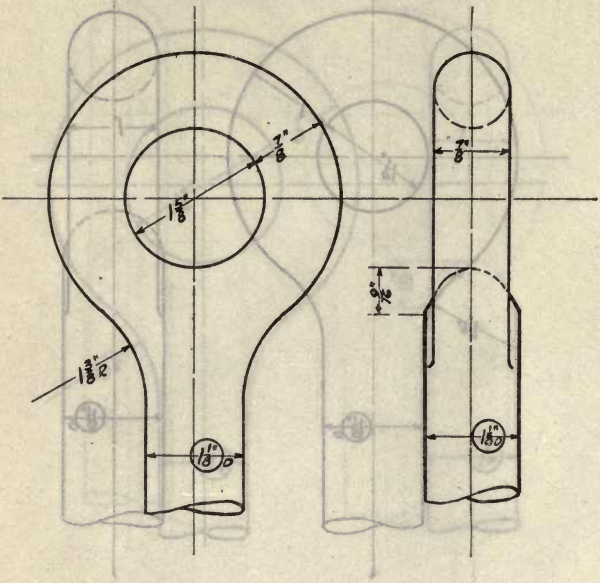

BOLT, EYE, 1 1/8″

Eye, 1 5/8″ Length, open die

Weight, lbs. **Die number, 1143-N**
Former die number, (6-24)

NOT STANDARD STOCK

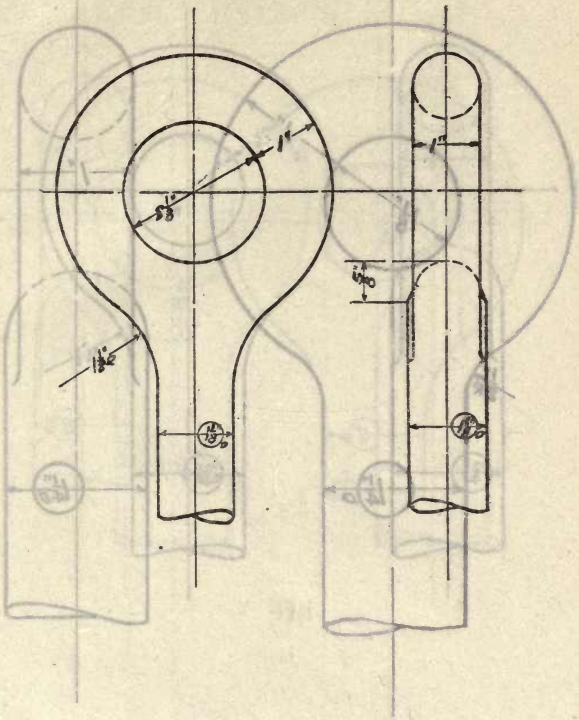

BOLT, EYE, 1 1/8″

Eye, 2 1/8″ Length, open die

Weight, lbs. Die number, 1144-MN
Former die numbers, (6-26) (6-26)

NOT STANDARD STOCK

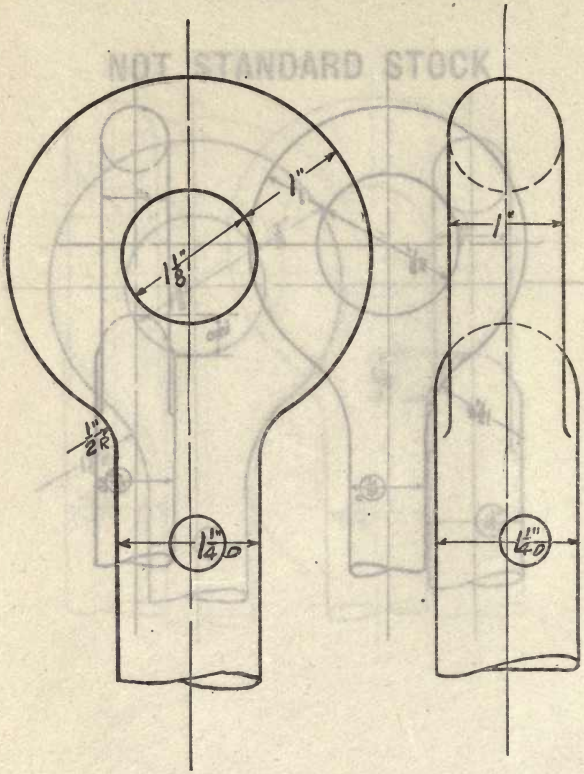

BOLT, EYE, 1 1/4″

Eye, 1 1/8″ Length, open die

Weight, lbs. Die number, 1145-B
Former die number, (3)

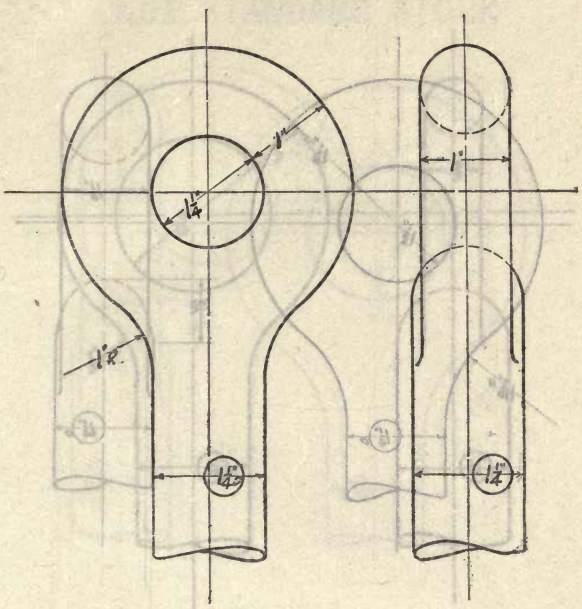

BOLT, EYE, 1 1/4″

Eye, 1 1/4″ Length, open die

Weight (steel), lbs. **Die number, 1146-Y**
Former die number, (38)

NOT STANDARD STOCK

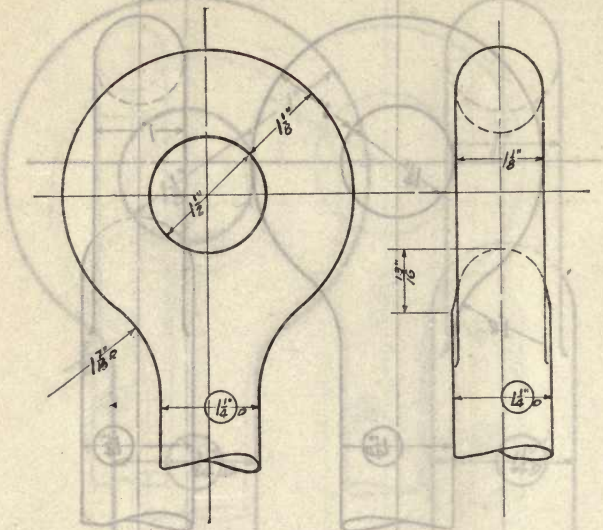

BOLT, EYE, 1 1/4″

Eye, 1 1/2″ Length, open die

Weight, lbs. Die number, 1147-MN
Former die numbers, (6-57) (6-57)

NOT STANDARD STOCK

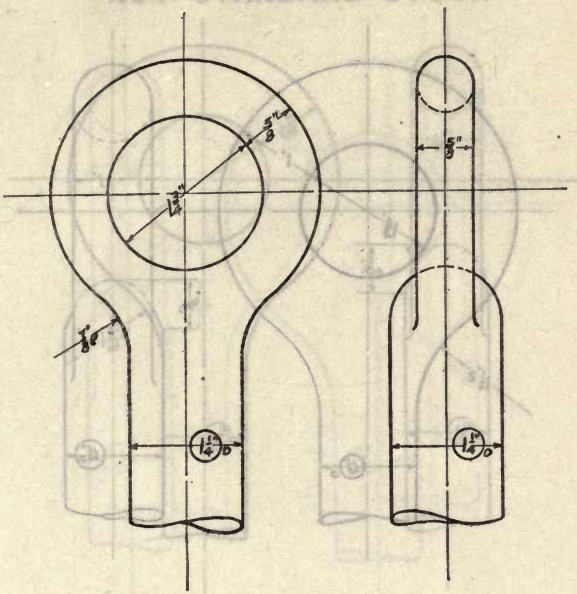

BOLT, EYE, 1 1/4″

Eye, 1 3/4″ Length, open die

Weight, lbs. **Die number, 1148-Y**
Former die number, (209)

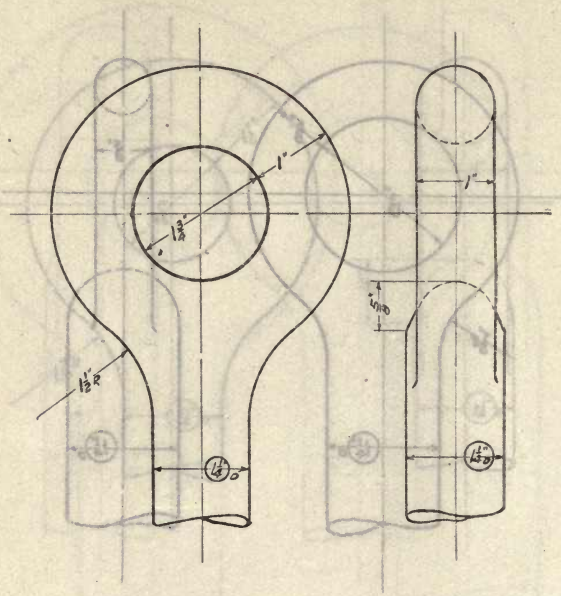

BOLT, EYE, 1 1/4″

Eye, 1 3/4″ Length, open die

Weight, lbs. Die number, 1149-MN
Former die numbers, (6-28) (6-28)

NOT STANDARD STOCK

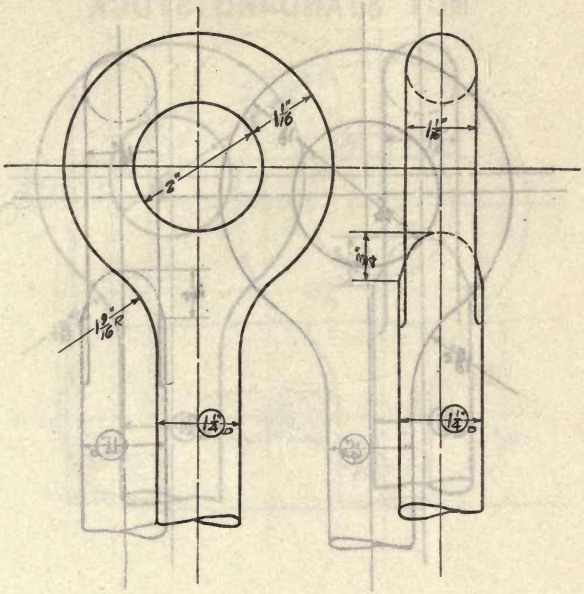

BOLT, EYE, 1 1/4″

Eye, 2″ Length, open die

Weight, lbs. Die number, 1150-M
Former die number, (6-29)

NOT STANDARD STOCK

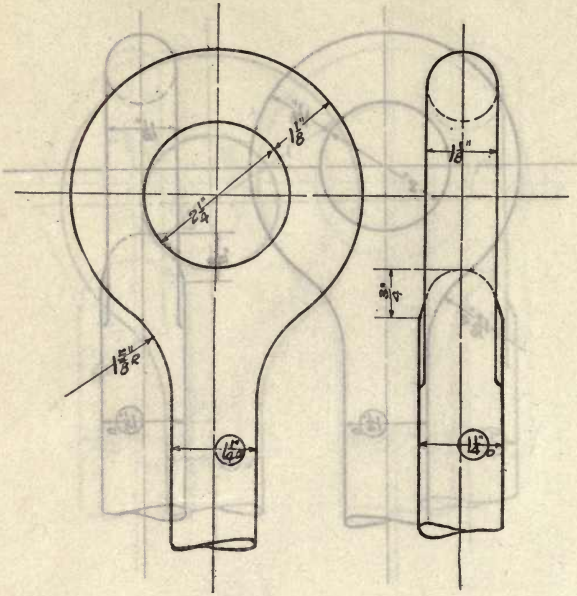

BOLT, EYE, 1 1/4″

Eye, 2 1/4″ Length, open die

Weight, lbs. Die number, 1151-MN
Former die numbers, (6-30) (6-30)

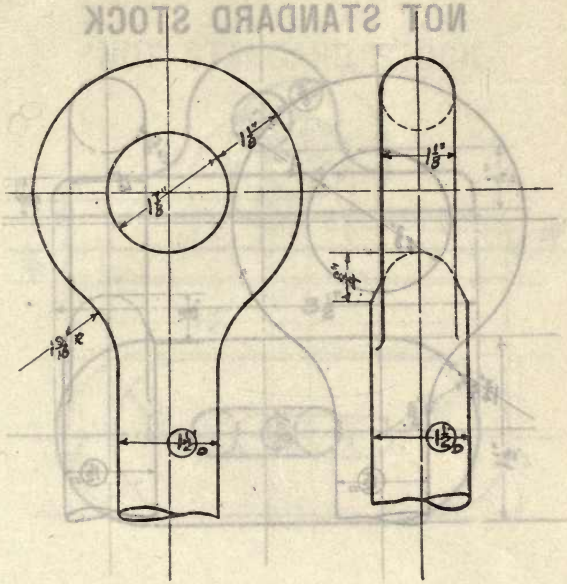

BOLT, EYE, 1 1/2″

Eye, 1 7/8″ Length, open die

Weight, lbs. Die number, 1152-MN
Former die numbers, (6-32) (6-32)

NOT STANDARD STOCK

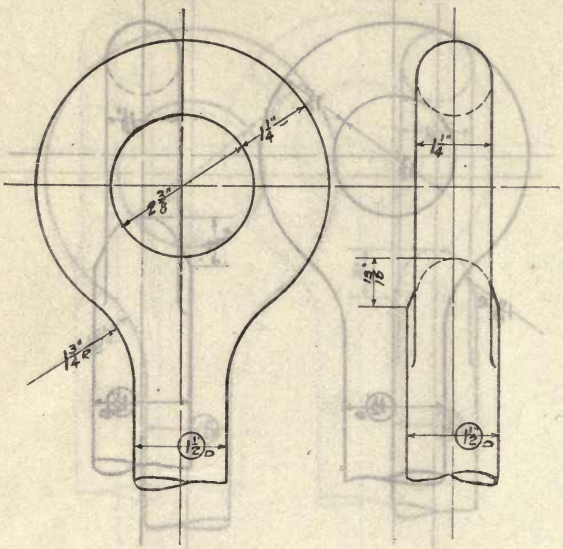

BOLT, EYE, 1 1/2″

Eye, 2 3/8″ Length, open die

Weight, lbs. Die number, 1153-M
Former die number, (6-34)

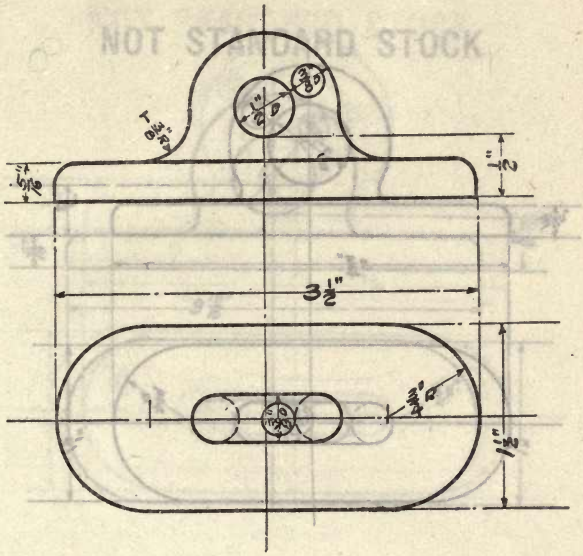

PAD EYE, STRAIGHT, 3/8″

Eye, 1/2″ Size of pad, 3 1/2″ x 1 1/2″ x 5/16″

Weight (steel), 0.55 lb. Die number, 1154-NMYP
Former die numbers, (2-1) (2-1) (81) (41)

NOT STANDARD STOCK

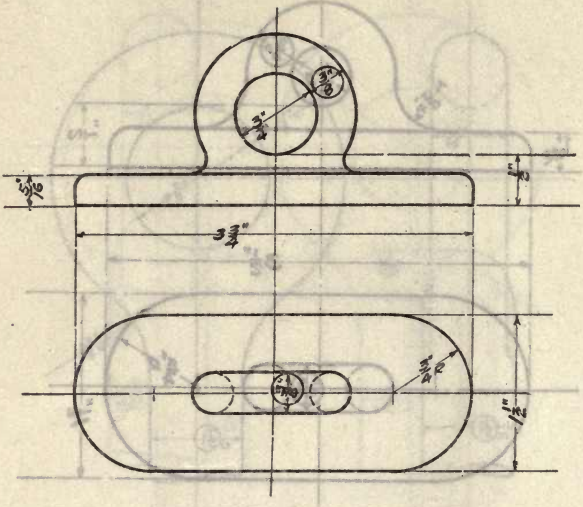

PAD EYE, STRAIGHT, 3/8″

Eye, 3/4″ Size of pad, 3 3/4″ x 1 1/2″ x 5/16″

Weight (steel), 0.60 lb. Die number, 1155-BMN
Former die numbers, (90) (2-2) (2-2)

NOT STANDARD STOCK

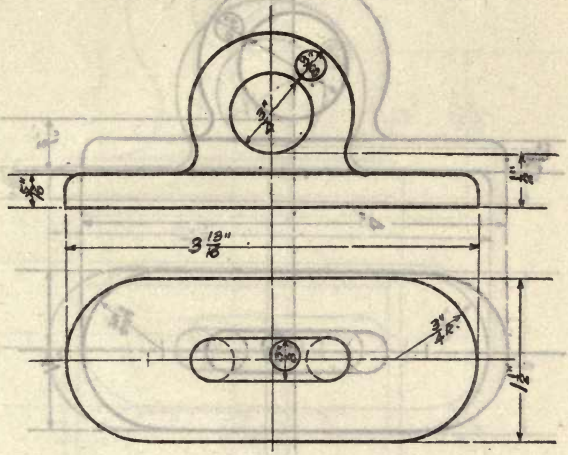

PAD EYE, STRAIGHT, 3/8″

Eye, 3/4″ Size of pad, 3 13/16″ x 1 1/2″ x 5/16″

Weight (steel), 0.50 lb. Die number, 1156-P
Former die number, (42)

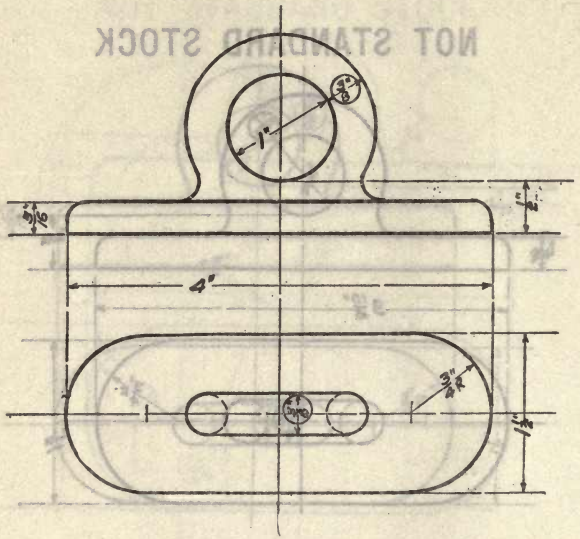

PAD EYE, STRAIGHT, 3/8″

Eye, 1″ **Size of pad, 4″ x 1 1/2″ x 5/16″**

Weight, **lbs.** **Die number, 1157-MN**
Former die numbers, (2-3) (2-3)

NOT STANDARD STOCK

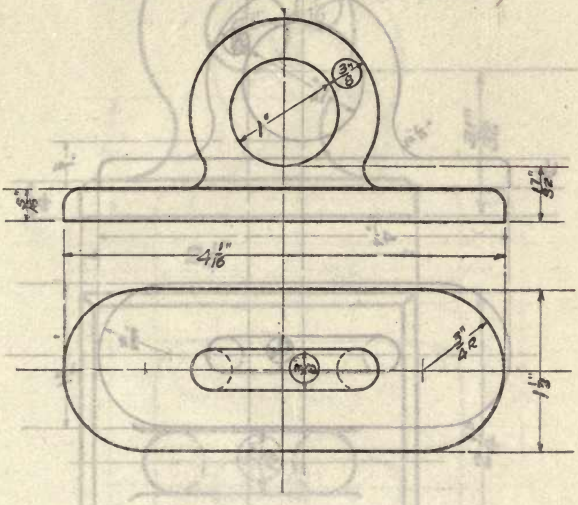

PAD EYE, STRAIGHT, 3/8″

Eye, 1″ Size of pad, 4 1/16″ x 1 1/2″ x 5/16″

Weight (steel), 0.75 lb. **Die number, 1158-P**
Former die number, (43)

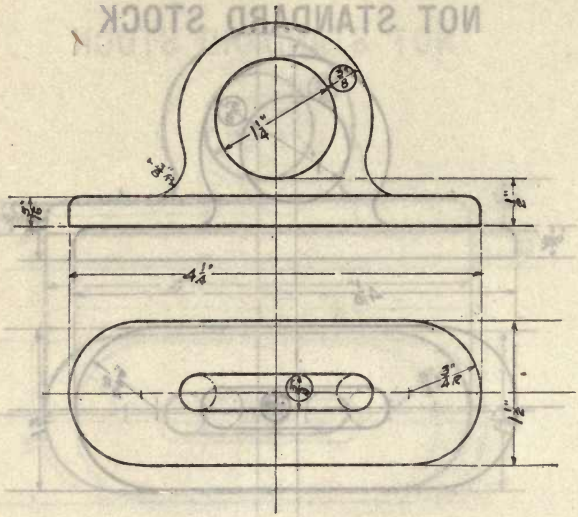

PAD EYE, STRAIGHT, 3/8″

Eye, 1 1/4″ Size of pad, 4 1/4″ x 1 1/2″ x 5/16″

Weight (steel), 0.75 lb. Die number, 1159-BMNY
Former die numbers, (92) (2-4) (2-4) (84)

NOT STANDARD STOCK

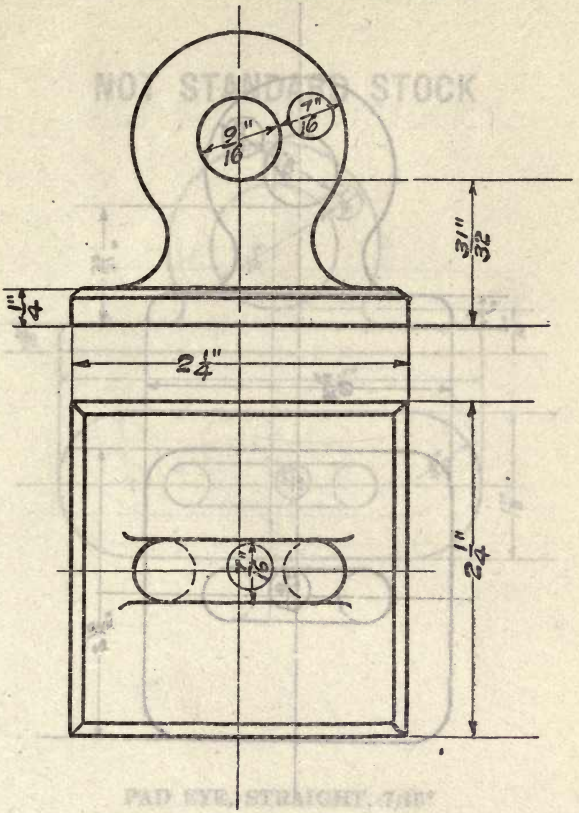

PAD EYE, STRAIGHT, 7/16″

Eye, 9/16″ Size of pad, 2 1/4″ x 2 1/4″ x 1/4″

Weight (brass), 0.75 lb. Die number, 1160-MNB
Former die numbers, (4-31) (4-31) (164)

NOT STANDARD STOCK

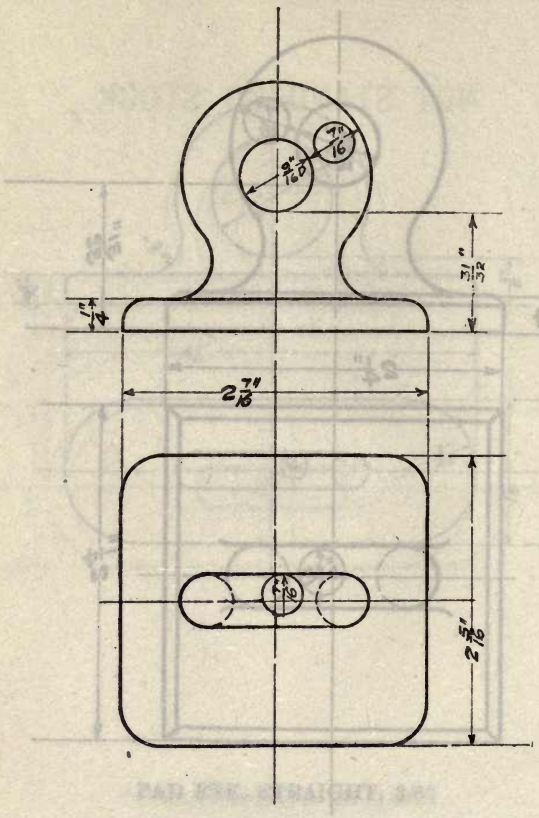

PAD EYE, STRAIGHT, 7/16″

Eye, 9/16″ Size of pad, 2 7/16″ x 2 5/16″ x 1/4″

Weight (steel), 0.53 lb. **Die number, 1161-Y**
Former die number, (97)

NOT STANDARD STOCK

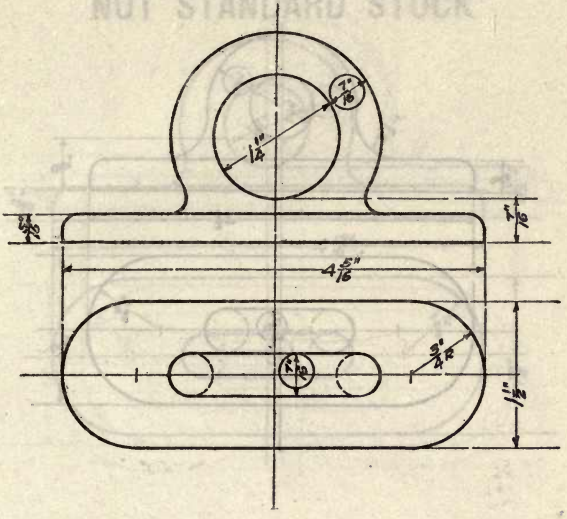

PAD EYE, STRAIGHT, 7/16″

Eye, 1 1/4″ Size of pad, 4 5/16″ x 1 1/2″ x 5/16″

Weight (steel), 0.63 lb. **Die number, 1162-P**
Former die number, (44)

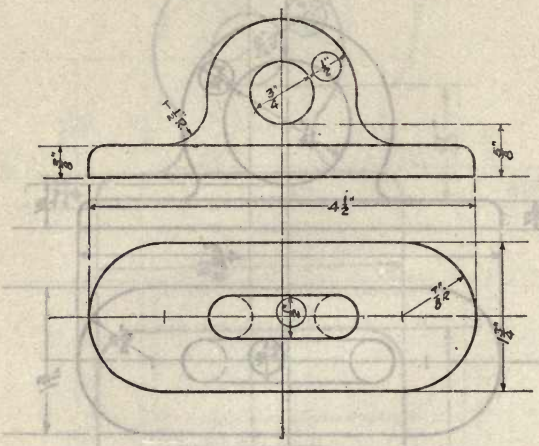

PAD EYE, STRAIGHT, 1/2″

Eye, 3/4″ Size of pad, 4 1/2″ x 1 3/4″ x 3/8″

Weight (steel), 1.0 lb. Die number, 1163-NMBPY
Former die numbers, (2-9) (2-9) (93) (45) (89)

NOT STANDARD STOCK

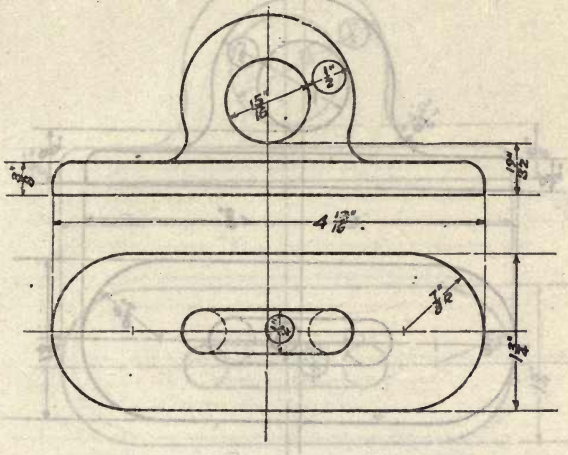

PAD EYE, STRAIGHT, 1/2″

Eye, 15/16″ Size of pad, 4 13/16″ x 1 3/4″ x 3/8″

Weight (steel), 0.75 lb. **Die number, 1164-P**
Former die number, (46)

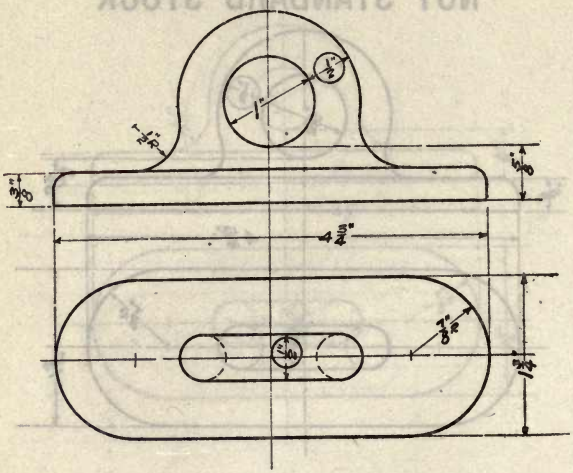

PAD EYE, STRAIGHT, 1/2″

Eye, 1″ **Size of pad, 4 3/4″ x 1 3/4″ x 3/8″**

Weight (steel), 1.0 lb. **Die number, 1165-NMBY**
Former die numbers, (2-10) (2-10) (94) (90)

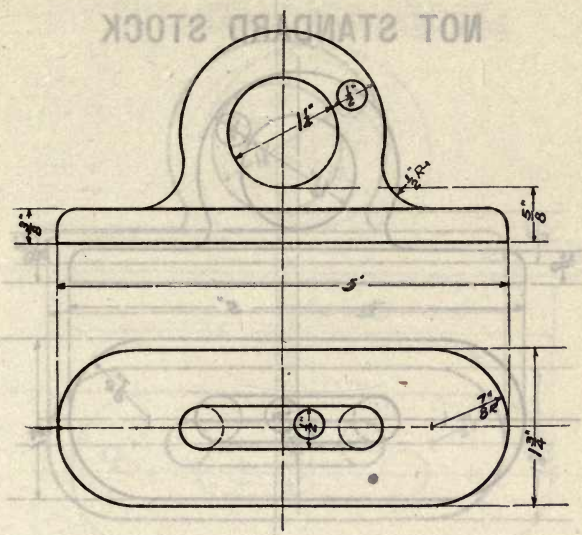

PAD EYE, STRAIGHT, 1/2″

Eye, 1 1/4″ Size of pad, 5″ x 1 3/4″ x 3/8″

Weight (steel), 1.3 lbs. Die number, 1166-NMY
Former die numbers, (2-11) (2-11) (91)

NOT STANDARD STOCK

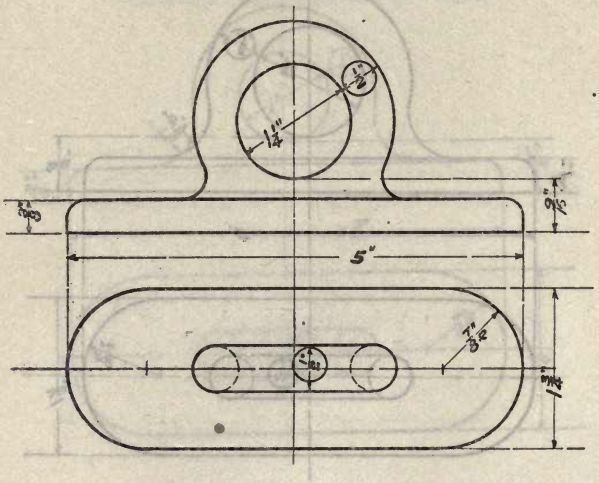

PAD EYE, STRAIGHT, 1/2″

Eye, 1 1/4″ Size of pad, 5″ x 1 3/4″ x 3/8″

Weight (steel), 1.1 lbs. **Die number, 1167-P**
Former die number, (47)

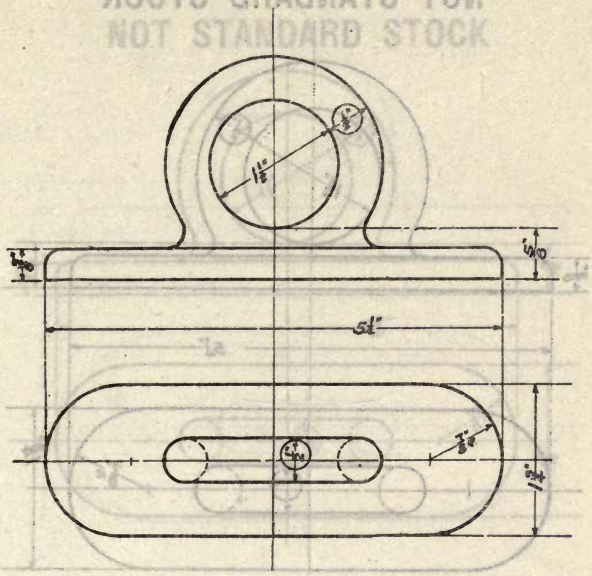

PAD EYE, STRAIGHT, 1/2″

Eye, 1 1/2″ Size of pad, 5 1/4″ x 1 3/4″ x 3/8″

Weight (steel), 1.5 lbs. Die number, 1168-NB
Former die numbers, (2-12) (96)

NOT STANDARD STOCK

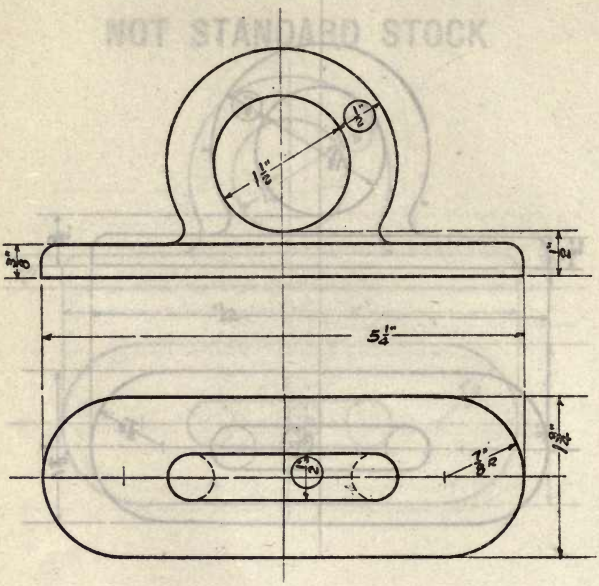

PAD EYE, STRAIGHT, 1/2″

Eye, 1 1/2″ Size of pad, 5 1/4″ x 1 3/4″ x 3/8″

Weight, lbs. Die number, 1169-M
Former die number, (2-12)

NOT STANDARD STOCK

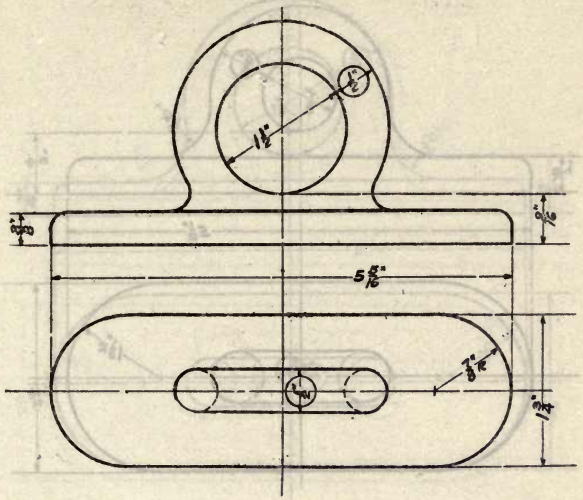

PAD EYE, STRAIGHT, 1/2″

Eye, 1 1/2″ Size of pad, 5 5/16″ x 1 3/4″ x 3/8″

Weight (steel), 1.3 lbs. **Die number, 1170-P**
Former die number, (48)

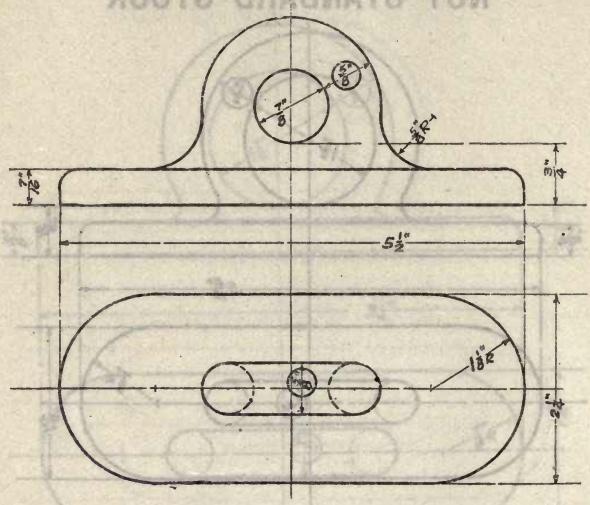

PAD EYE, STRAIGHT, 5/8″

Eye, 7/8″ Size of pad, 5 1/2″ x 2 1/4″ x 7/16

Weight (steel), 2.1 lbs. Die number, 1171-NY
Former die numbers, (2-21) (256)

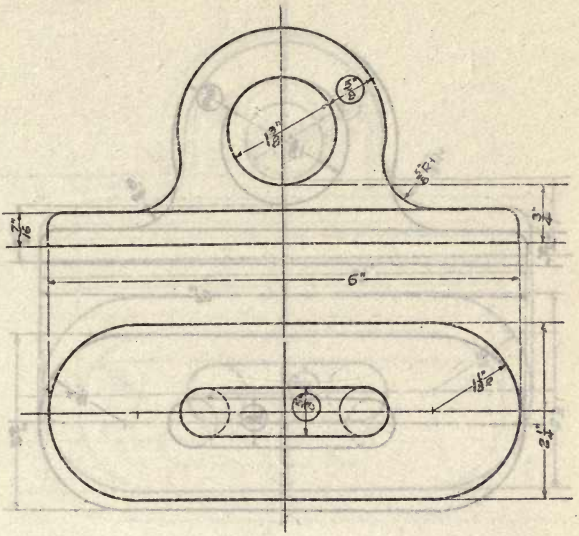

PAD EYE, STRAIGHT, 5/8″

Eye, 1 3/8″ Size of pad, 6″ x 2 1/4″ x 7/16″

Weight (steel), 2.3 lbs. Die number, 1172-NY
Former die numbers, (2-23) (257)

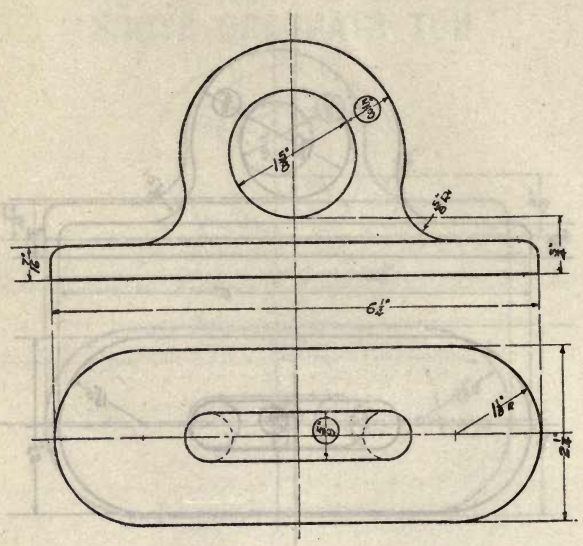

PAD EYE, STRAIGHT, 5/8″

Eye, 1 5/8″ Size of pad, 6 1/4″ x 2 1/4″ x 7/16″

Weight (steel), 3.1 lbs. Die number, 1173-NY
Former die numbers, (2-24) (258)

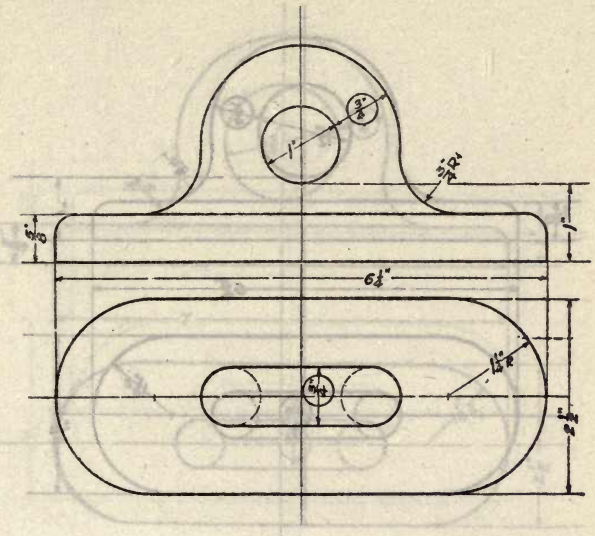

PAD EYE, STRAIGHT, 3/4″

Eye, 1″ Size of pad, 6 1/4″ x 2 1/2″ x 5/8″

Weight (steel), 3.5 lbs. Die number, 1174-NY
Former die numbers, (2-33) (259)

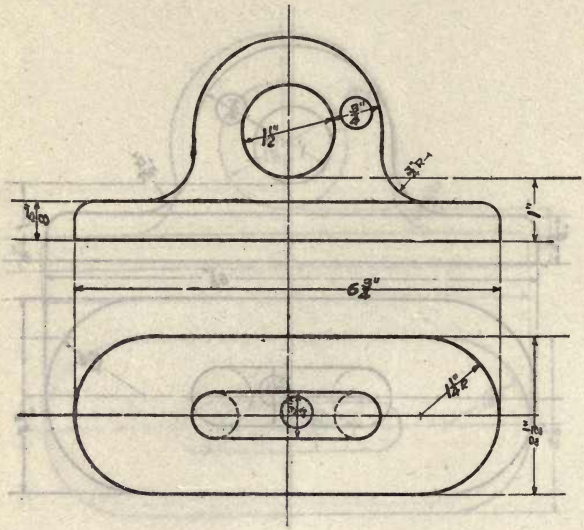

PAD EYE, STRAIGHT, 3/4″

Eye, 1 1/2″ Size of pad, 6 3/4″ x 2 1/2″ x 5/8″

Weight (steel), 3.8 lbs. **Die number, 1175-Y**
Former die number, (260)

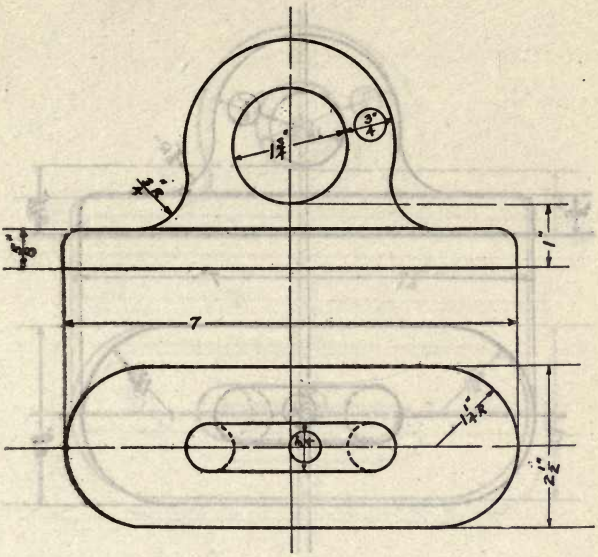

PAD EYE, STRAIGHT, 3/4″

Eye, 1 3/4″ Size of pad, 7″ x 2 1/2″ x 5/8″

Weight (steel), 4.0 lbs. Die number, 1176-NY
Former die numbers, (2-36) (261)

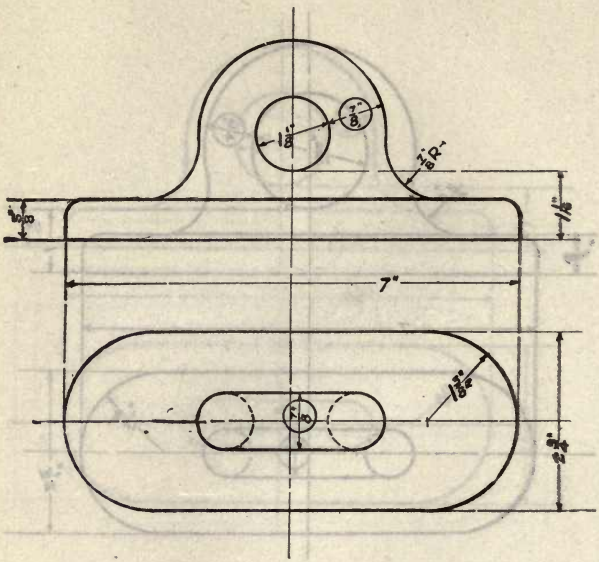

PAD EYE, STRAIGHT, 7/8″

Eye, 1 1/8″ Size of pad, 7″ x 2 3/4″ x 5/8″

Weight (steel), 4.5 lbs. Die number, 1177-NY
Former die numbers, (2-45) (262)

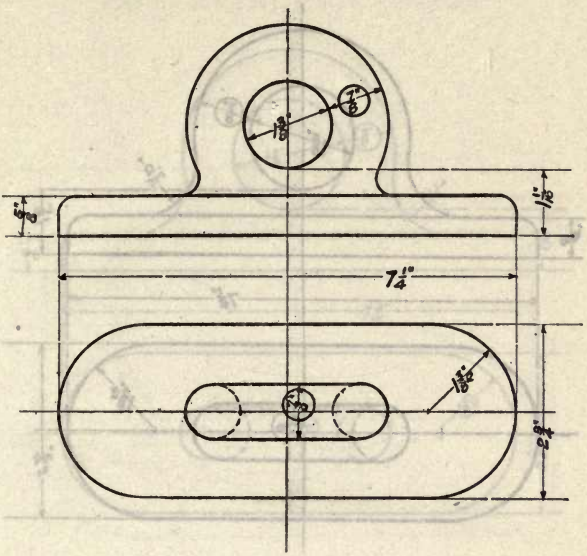

PAD EYE, STRAIGHT, 7/8″

Eye, 1 3/8″ Size of pad, 7 1/4″ x 2 3/4″ x 5/8″

Weight, lbs. **Die number, 1178-N**
Former die number, (2-46)

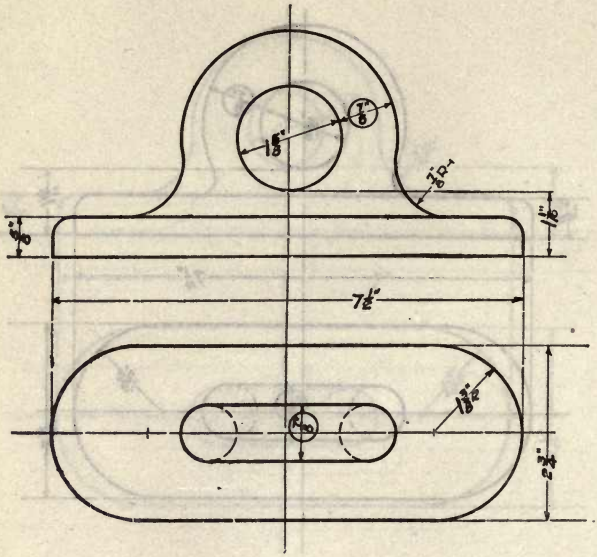

PAD EYE, STRAIGHT, 7/8″

Eye, 1 5/8″ Size of pad, 7 1/2″ x 2 3/4″ x 5/8″

Weight (steel), 4.6 lbs. **Die number, 1179-Y**
Former die number, (263)

NOT STANDARD STOCK

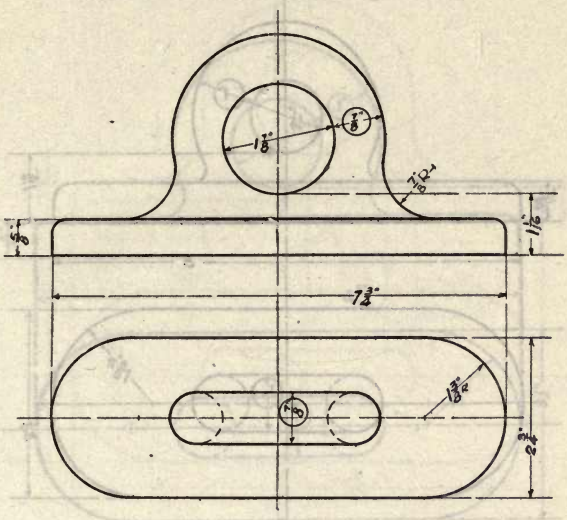

PAD EYE, STRAIGHT, 7/8″

Eye, 1 7/8″ Size of pad, 7 3/4″ x 2 3/4″ x 5/8″

Weight (steel), 4.6 lbs. Die number, 1180-NYM
Former die numbers, (2-48) (264)

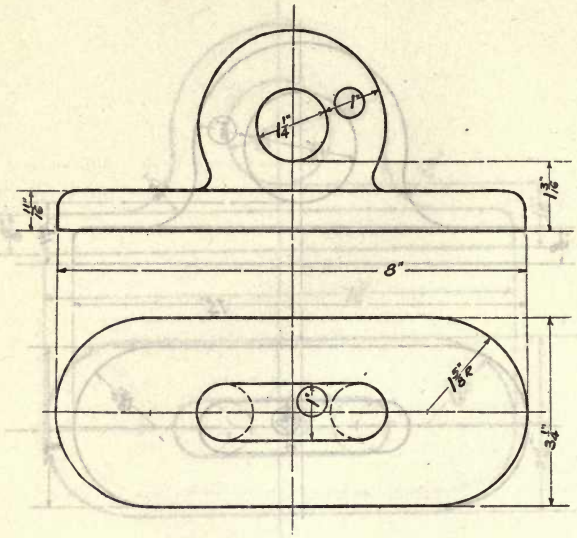

PAD EYE, STRAIGHT, 1″

Eye, 1 1/4″ x Size of pad, 8″ x 3 1/4″ x 11/16″

Weight, lbs. Die number, 1181-N
Former die number, (2-57)

NOT STANDARD STOCK

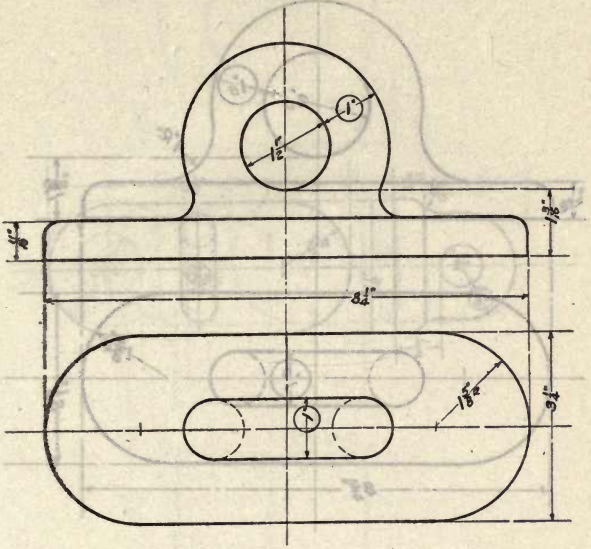

PAD EYE, STRAIGHT, 1″

Eye, 1 1/2″ **Size of pad, 8 1/4″ x 3 1/4″ x 11/16″**

Weight (steel), 6.3 lbs. **Die number, 1182-N**
Former die number, (2-58)

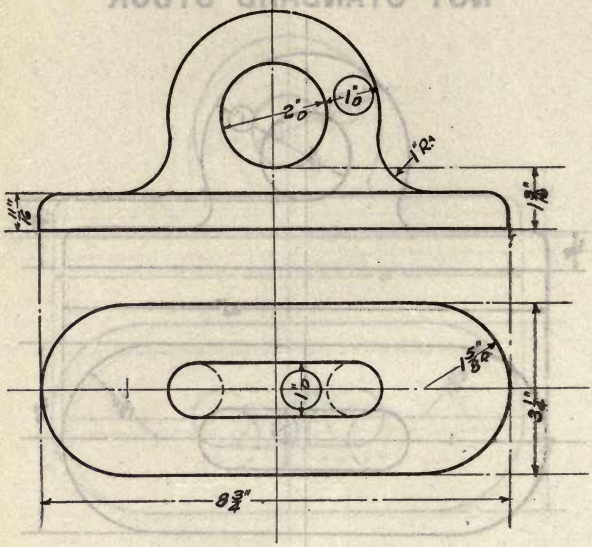

PAD EYE, STRAIGHT, 1″

Eye, 2″ Size of pad, 8 3/4″ x 3 1/4″ x 11/16″

Weight (steel), 7.4 lbs. Die number, 1183-NY
Former die numbers, (2-60) (265)

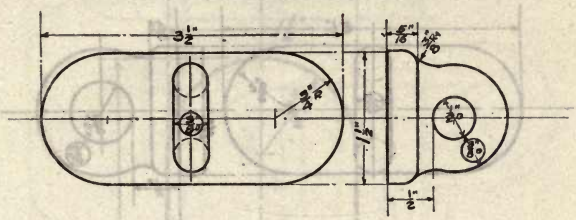

PAD EYE, CROSS, 3/8″

Eye, 1/2″ Size of pad, 3 1/2″ x 1 1/2″ x 5/16″

Weight (steel), 0.53 lb. **Die number, 1184-NY**
Former die numbers, (2-5) (85)

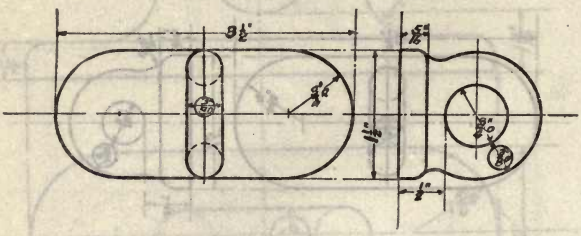

PAD EYE, CROSS, 3/8″

Eye, 3/4″ Size of pad, 3 1/2″ x 1 1/2″ x 5/16″

Weight (steel), 0.25 lb. **Die number, 1185-N**
Former die number, (2-6)

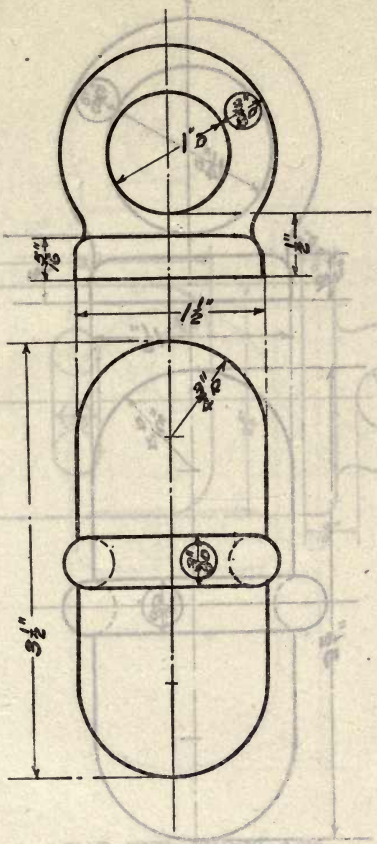

PAD EYE, CROSS, 3/8″

Eye, 1″ **Size of pad, 3 1/2″ x 1 1/2″ x 5/16″**

Weight (steel), 0.25 lb. **Die number, 1186-N**
Former die number, (2-7)

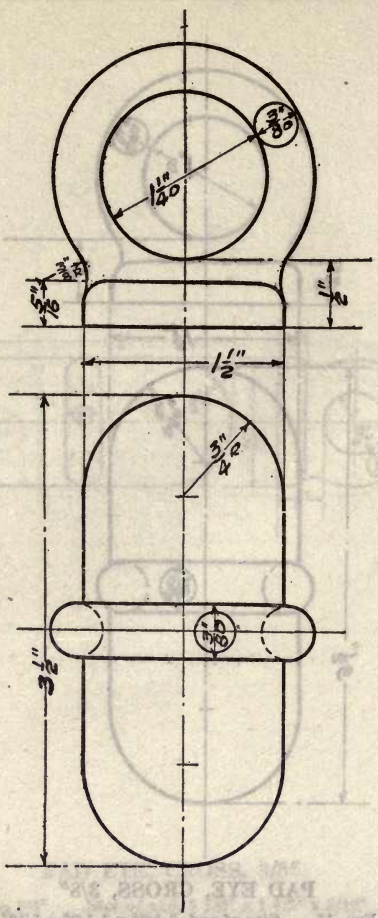

PAD EYE, CROSS, 3/8″

Eye, 1 1/4″ Size of pad, 3 1/2″ x 1 1/2″ x 5/16″

Weight (steel), 0.63 lb. Die number, 1187-NY

Former die numbers, (2-8) (88-8)

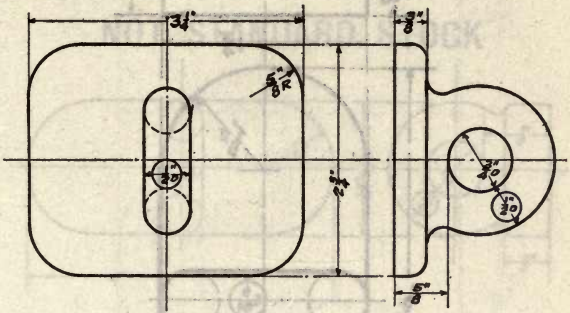

PAD EYE, CROSS, 1/2″

Eye, 3/4″ Size of pad, 3 1/4″ x 2 3/4″ x 3/8″

Weight (steel), 1.0 lb. **Die number, 1188-N**
Former die number, (2-17)

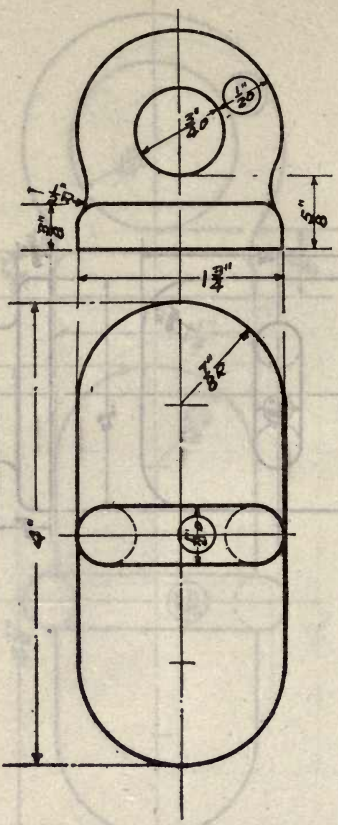

PAD EYE, CROSS, 1/2″

Eye, 3/4″ Size of pad, 4″ x 1 3/4″ x 3/8″

Weight (steel), 0.94 lb. Die number, 1189-NY
Former die numbers, (2-13) (93-13)

NOT STANDARD STOCK

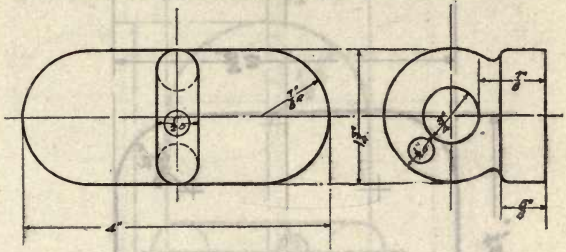

PAD EYE, CROSS, 1/2″

Eye, 3/4″ Size of pad, 4″ x 1 3/4″ x 5/8″

Weight (steel), 0.88 lb.

Die number, 1190-B
Former die number, (44)

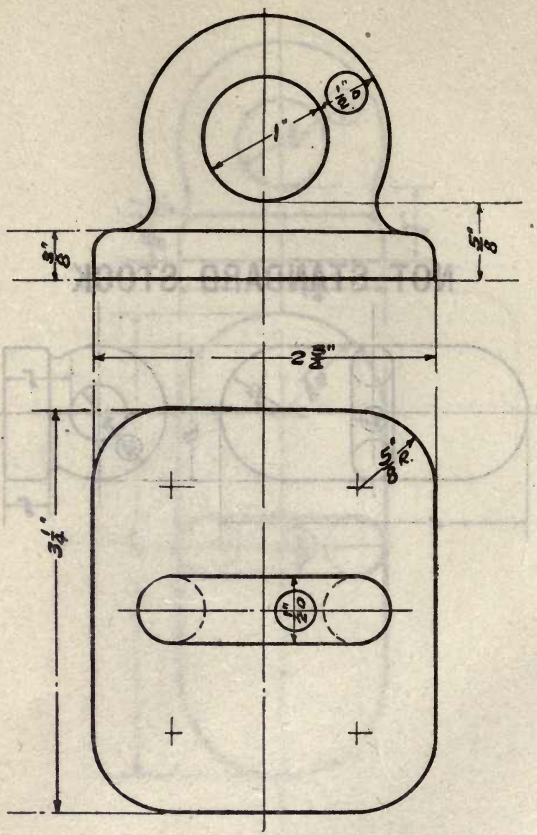

PAD EYE, CROSS, 1/2″

Eye, 1″ Size of pad, 3 1/4″ x 2 3/4″ x 3/8″

Weight, lbs. **Die number, 1191-N**
Former die number, (2-18)

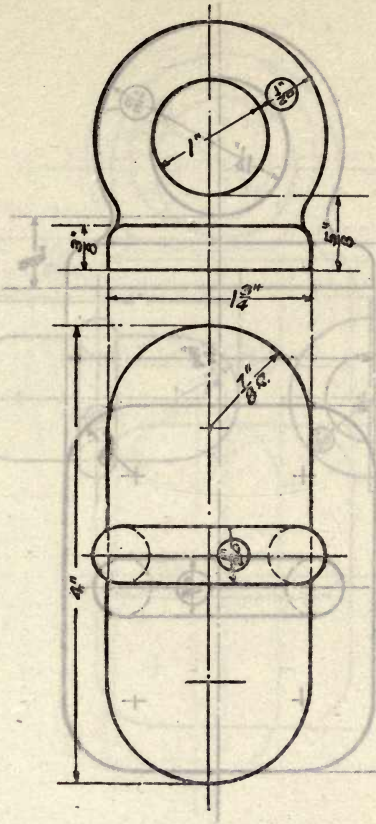

PAD EYE, CROSS, 1/2″

Eye, 1″ Size of pad, 4″ x 1 3/4″ x 3/8″

Weight (steel), 0.5 lb. Die number, 1192-N
Former die number, (2-14)

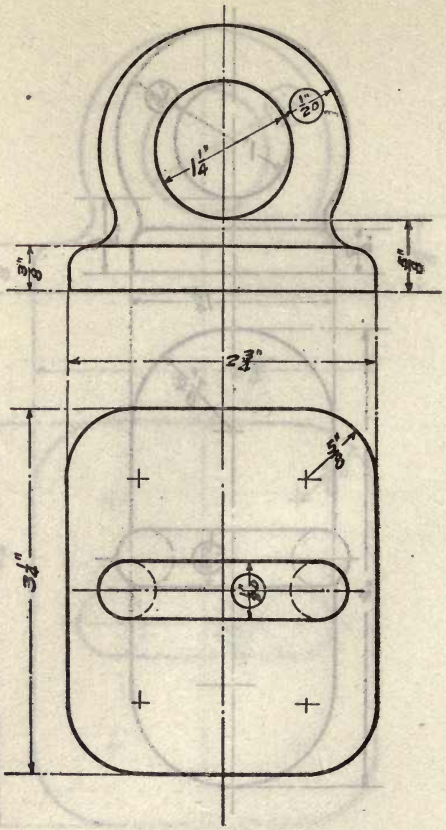

PAD EYE, CROSS, 1/2″

Eye, 1 1/4″ Size of pad, 3 1/4″ x 2 3/4″ x 3/8″

Weight, lbs. Die number, 1193-N
Former die number, (2-19)

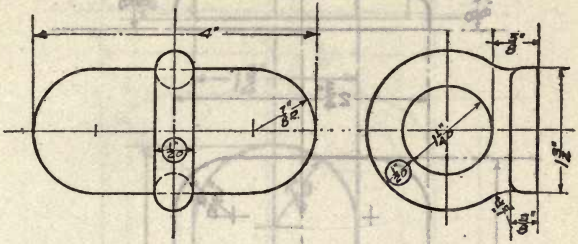

PAD EYE, CROSS, 1/2″

Eye, 1 1/4″ Size of pad, 4″ x 1 3/4″ x 3/8″

Weight (steel), 1.0 lb. **Die number, 1194-Y**
Former die number, (95)

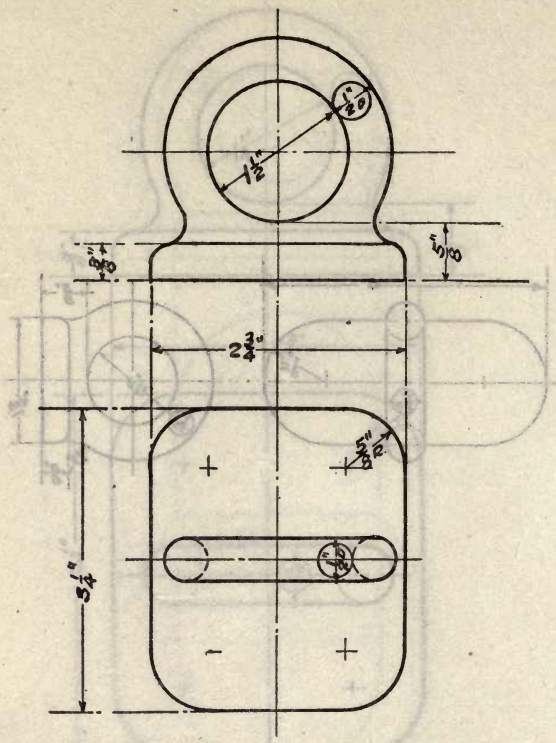

PAD EYE, CROSS, 1/2″

Eye, 1 1/2″ Size of pad, 3 1/4″ x 2 3/4″ x 3/8″

Weight, lbs. Die number, 1195-NM
Former die numbers, (2-20) (2-20)

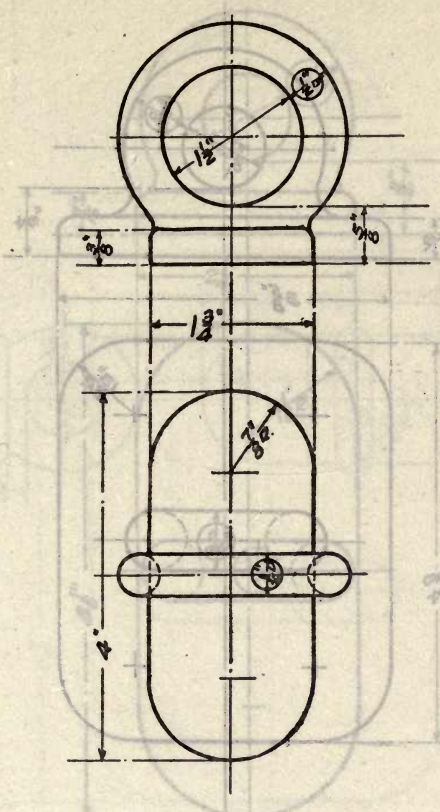

PAD EYE, CROSS, 1/2″

Eye, 1 1/2″ Size of pad, 4″ x 1 3/4″ x 3/8″

Weight, lbs. Die number, 1196-MN
Former die numbers, (2-16) (2-16)

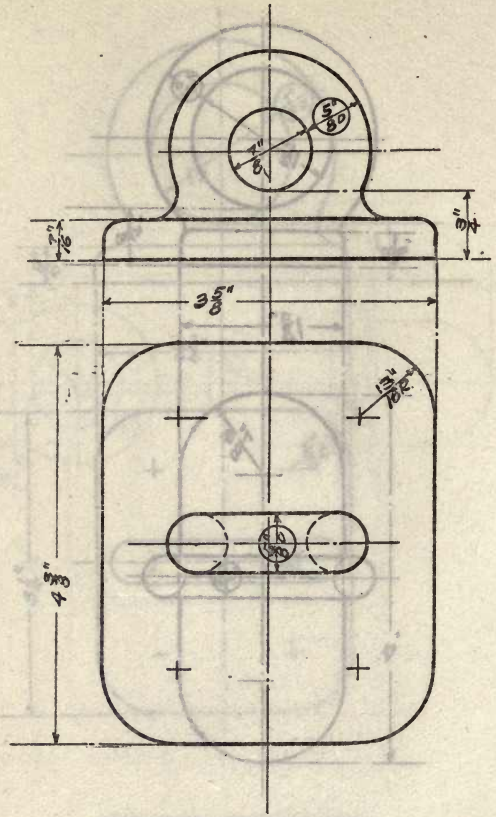

PAD EYE, CROSS, 5/8″

Eye, 7/8″ Size of pad, 4 3/8″ x 3 5/8″ x 7/16″

Weight (steel), 1.5 lbs. Die number, 1197-N
Former die number, (2-29)

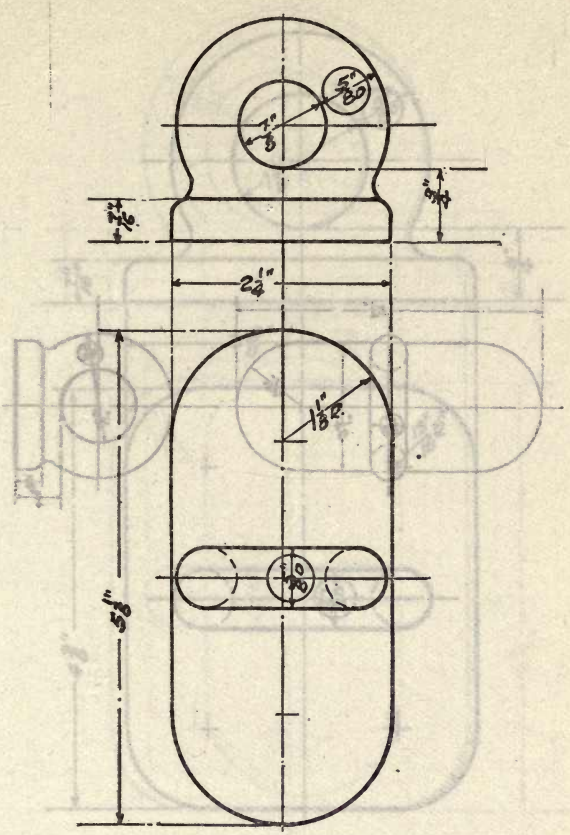

PAD EYE, CROSS, 5/8″

Eye, 7/8″ Size of pad, 5 1/8″ x 2 1/4″ x 7/16″

Weight (steel), 1.0 lb. **Die number, 1198-N**
Former die number, (2-25)

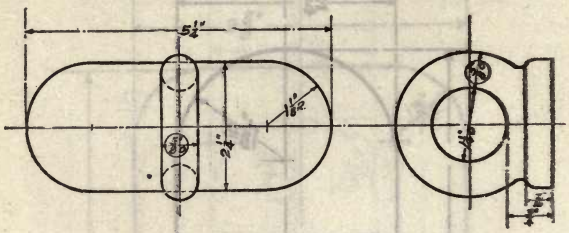

PAD EYE, CROSS, 5/8″

Eye, 1 1/4″ Size of pad, 5 1/4″ x 2 1/4″ x 7/16″

Weight, lbs. Die number, 1199-B
Former die number, (336)

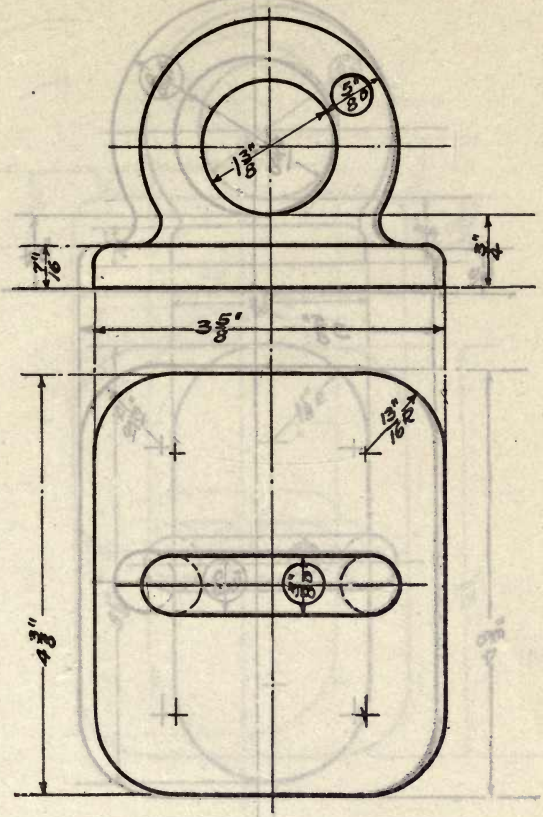

PAD EYE, CROSS, 5/8″

Eye, 1 3/8″ Size of pad, 4 3/8″ x 3 5/8″ x 7/16″

Weight (steel), 2.0 lbs. Die number, 1200-N
Former die number, (2-31)

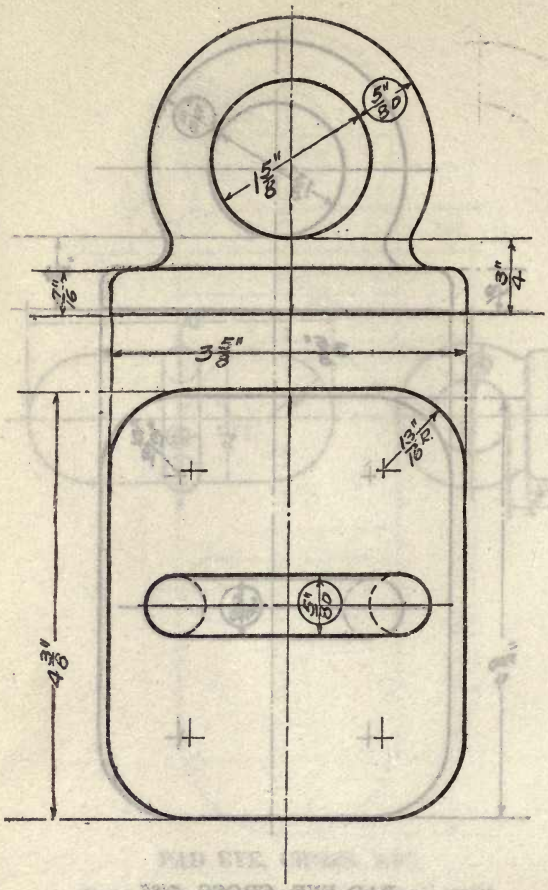

PAD EYE, CROSS, 5/8″

Eye, 1 5/8″ Size of pad, 4 3/8″ x 3 5/8″ x 7/16″

Weight, lbs. Die number, 1201-MN
Former die numbers, (2-32) (2-32)

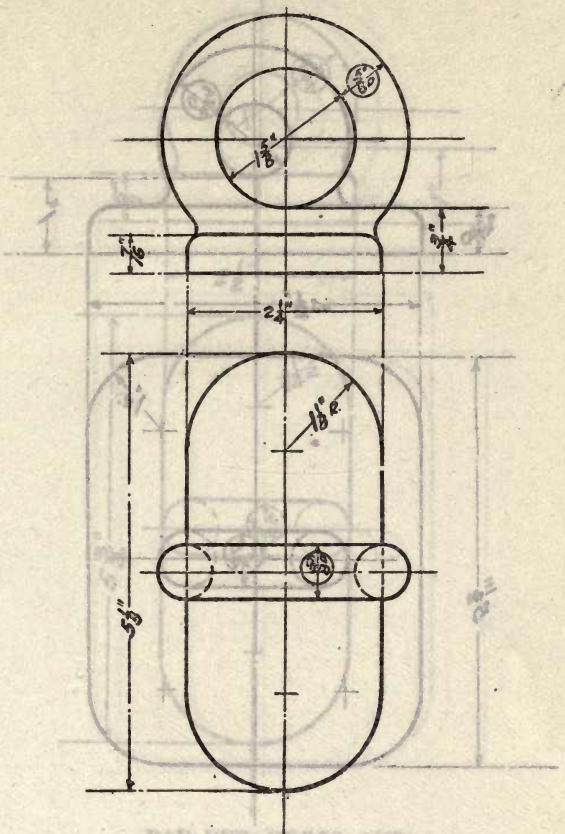

PAD EYE, CROSS, 5/8″

Eye, 1 5/8″ Size of pad, 5 1/8″ x 2 1/4″ x 7/16″

Weight, lbs. Die number, 1202-MN
Former die numbers, (2-28) (2-28)

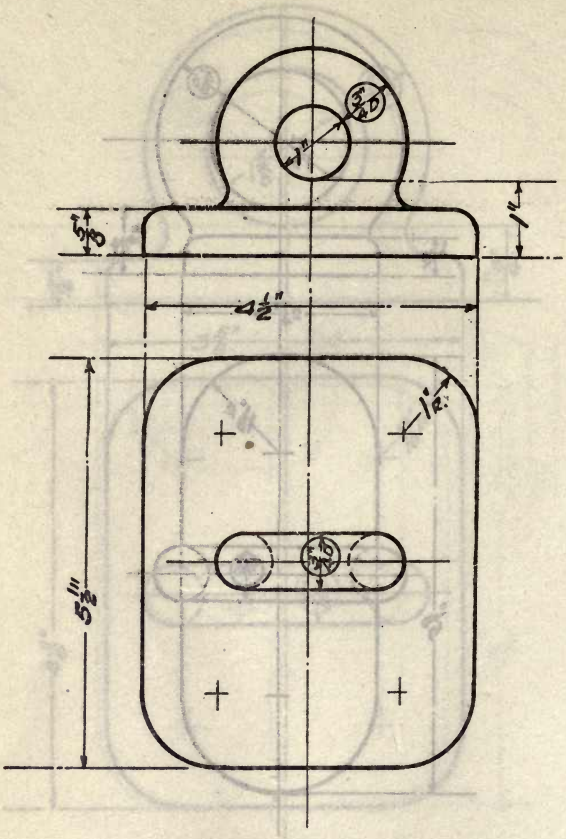

PAD EYE, CROSS, 3/4″

Eye, 1″ Size of pad, 5 1/2″ x 4 1/2″ x 5/8″

Weight (steel), 7.0 lbs. **Die number, 1203-N**
Former die number, (2-41)

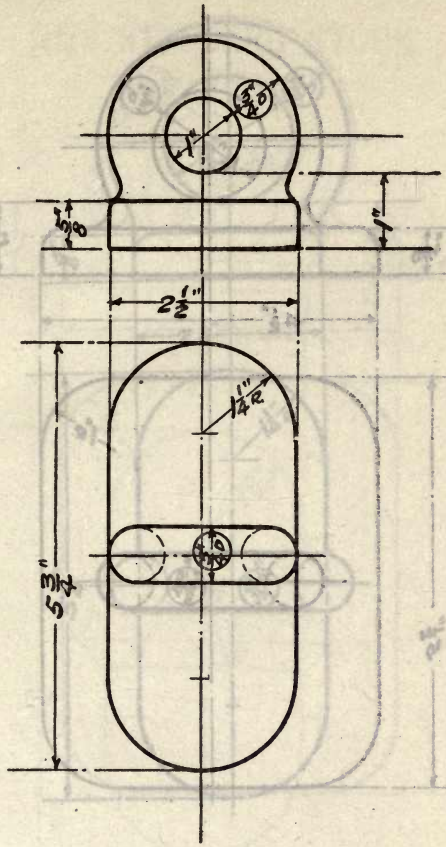

PAD EYE, CROSS, 3/4″

Eye, 1″ Size of pad, 5 3/4″ x 2 1/2″ x 5/8″

Weight, lbs. Die number, 1204-N
Former die number, (2-37)

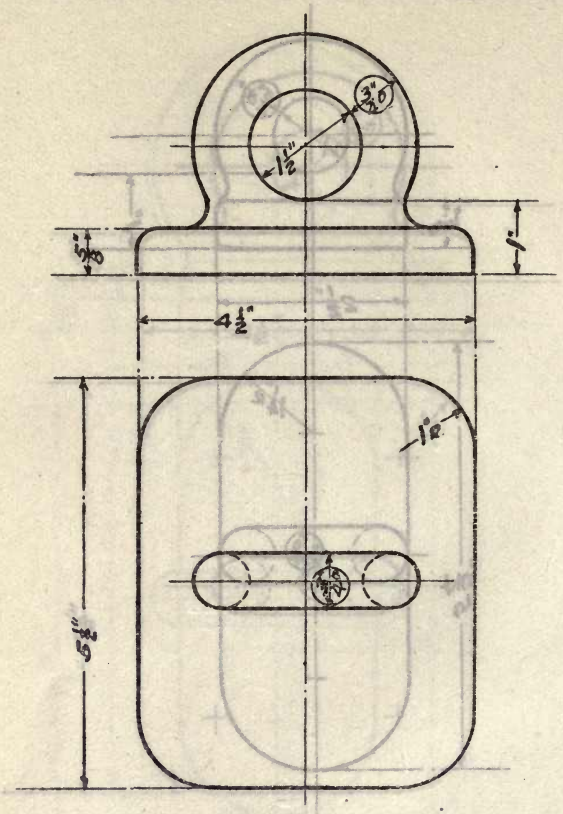

PAD EYE, CROSS, 3/4″

Eye, 1 1/2″ Size of pad, 5 1/2″ x 4 1/2″ x 5/8″

Weight (steel), 5.0 lbs. Die number, 1205-N
Former die number, (2-43)

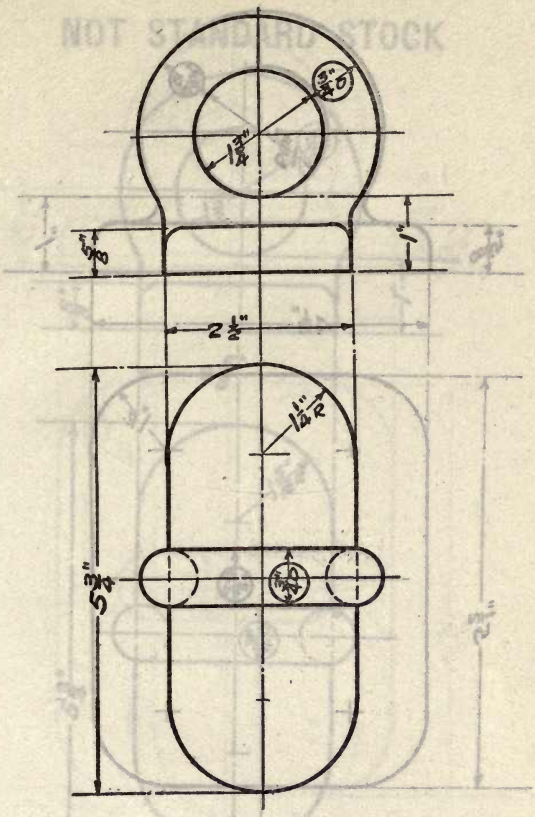

PAD EYE, CROSS, 3/4″

Eye, 1 3/4″ Size of pad, 5 3/4″ x 2 1/2″ x 5/8″

Weight, lbs. Die number, 1206-N
Former die number, (2-40)

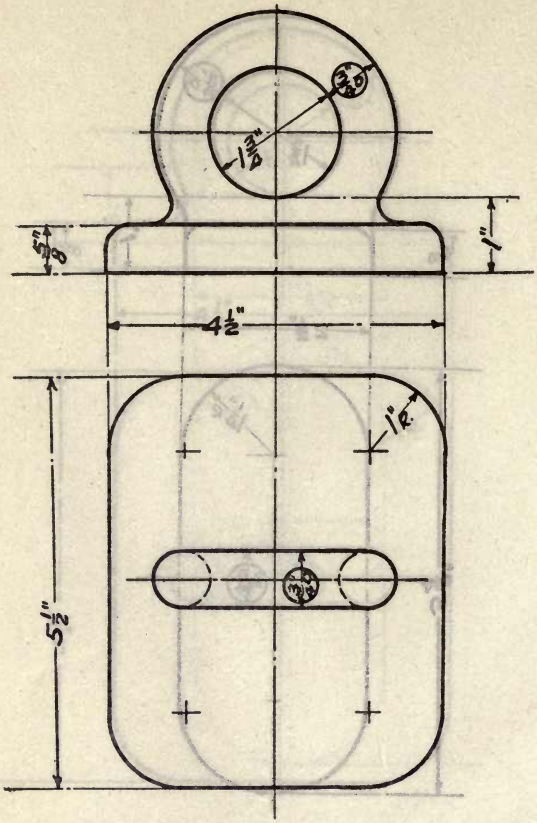

PAD EYE, CROSS, 3/4"

Eye, 1 3/4" **Size of pad, 5 1/2" x 4 1/2" x 5/8"**

Weight (steel), 5.5 lbs. **Die number, 1207-N**
Former die number, (2-44)

NOT STANDARD STOCK

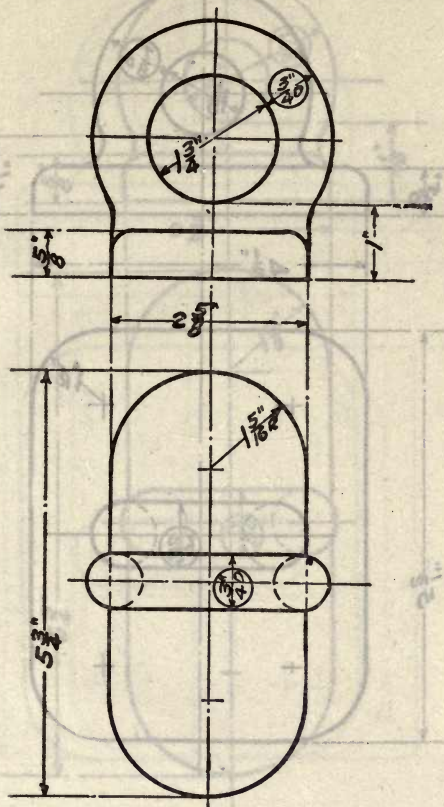

PAD EYE, CROSS, 3/4″

Eye, 1 3/4″ **Size of pad, 5 3/4″ x 2 5/8″ x 5/8″**

Weight, **lbs.** **Die number, 1208-M**
Former die number, (2-40)

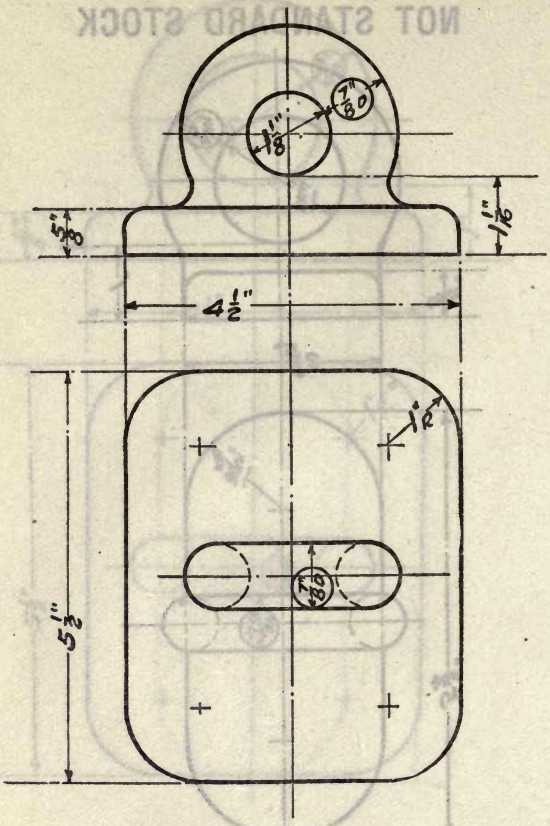

PAD EYE, CROSS, 7/8″

Eye, 1 1/8″ **Size of pad, 5 1/2″ x 4 1/2″ x 5/8″**

Weight (steel), 6.0 lbs. **Die number, 1209-N**
Former die number, (2-53)

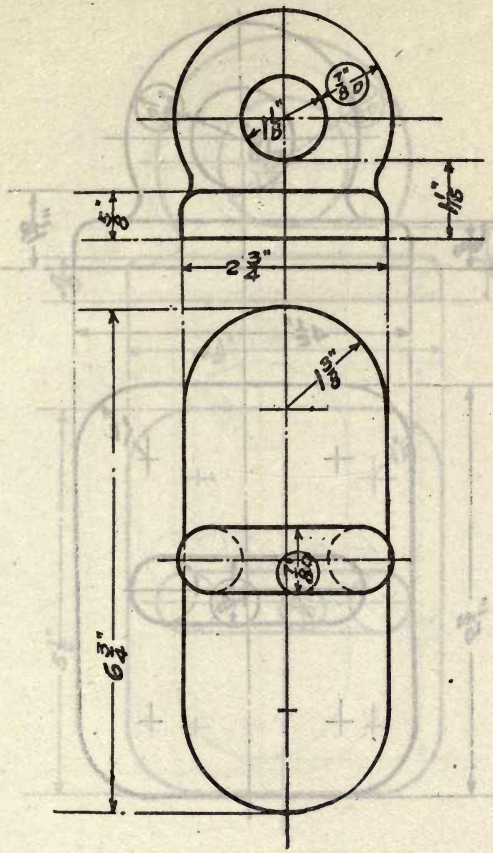

PAD EYE, CROSS, 7/8″

Eye, 1 1/8″ Size of pad, 6 3/4″ x 2 3/4″ x 5/8″

Weight, lbs. Die number, 1210-N
Former die number, (2-49)

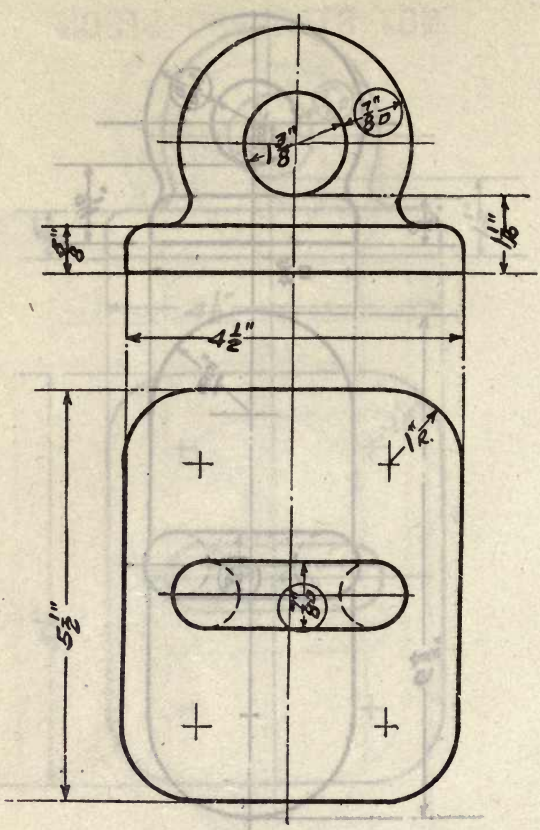

PAD EYE, CROSS, 7/8″

Eye, 1 3/8″ Size of pad, 5 1/2″ x 4 1/2″ x 5/8″

Weight, lbs. **Die number, 1211-N**
Former die number, (2-54)

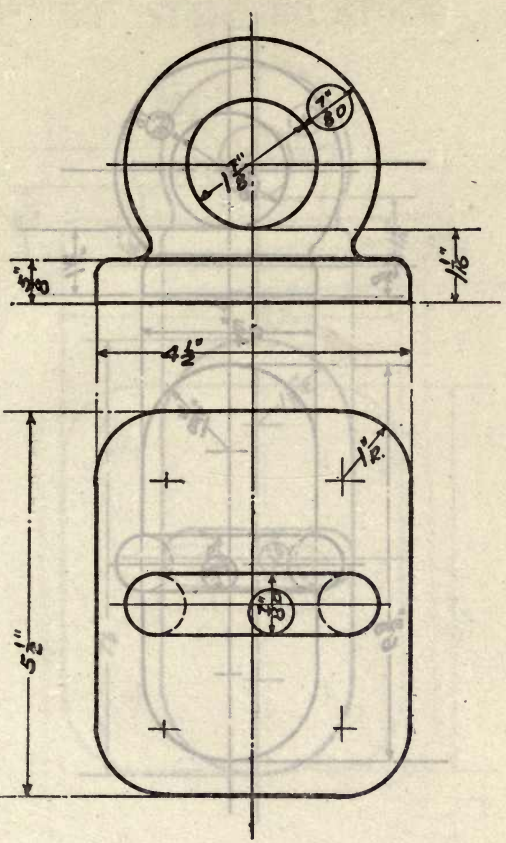

PAD EYE, CROSS, 7/8″

Eye, 1 7/8″ Size of pad, 5 1/2″ x 4 1/2″ x 5/8″

Weight, lbs. **Die number, 1212-N**
Former die number, (2-56)

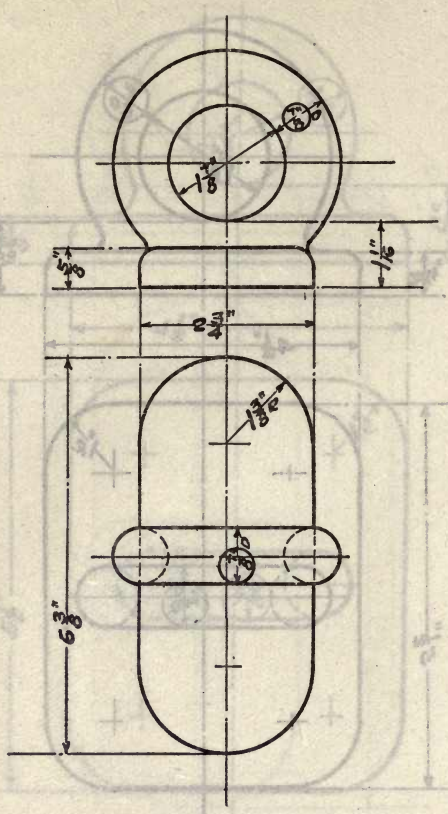

PAD EYE, CROSS, 7/8″

Eye, 1 7/8″ Size of pad, 6 3/8″ x 2 3/4″ x 5/8″

Weight (steel), 2.0 lbs. **Die number, 1213-N**
Former die number, (2-52)

NOT STANDARD STOCK

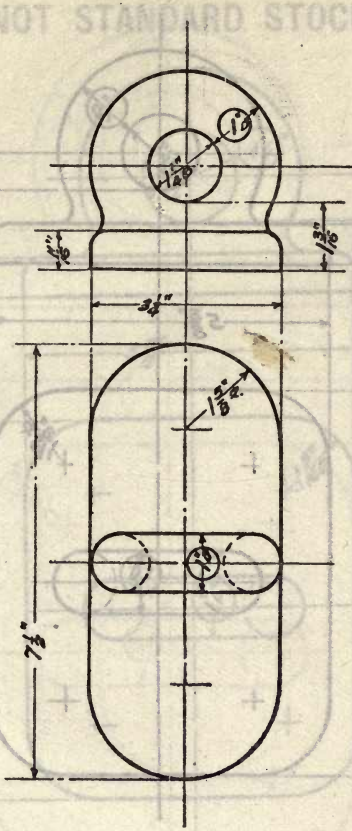

PAD EYE, CROSS, 1″

Eye, 1 1/4″ Size of pad, 7 1/2″ x 3 1/4″ x 11/16″

Weight (steel), 6.5 lbs. **Die number, 1214-N**
Former die number, (2-61)

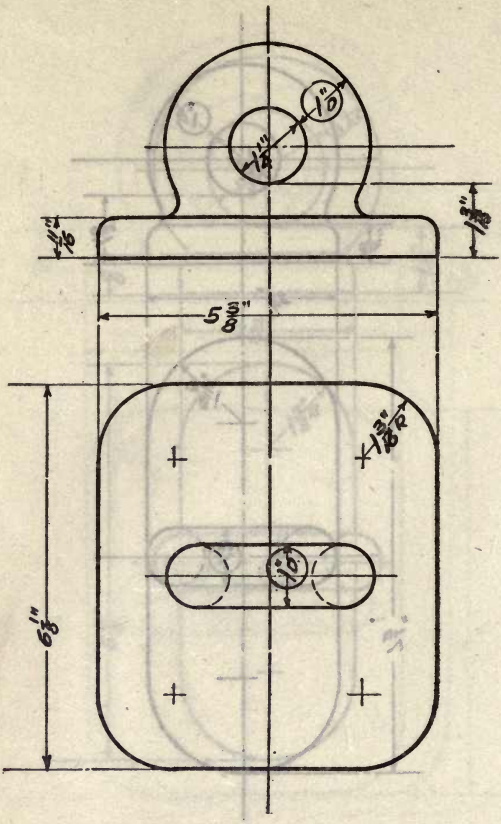

PAD EYE, CROSS, 1″

Eye, 1 1/4″ Size of pad, 6 1/8″ x 5 3/8″ x 11/16″

Weight (steel), 7.5 lbs. Die number, 1215-NY
Former die numbers, (2-65) (266)

NOT STANDARD STOCK

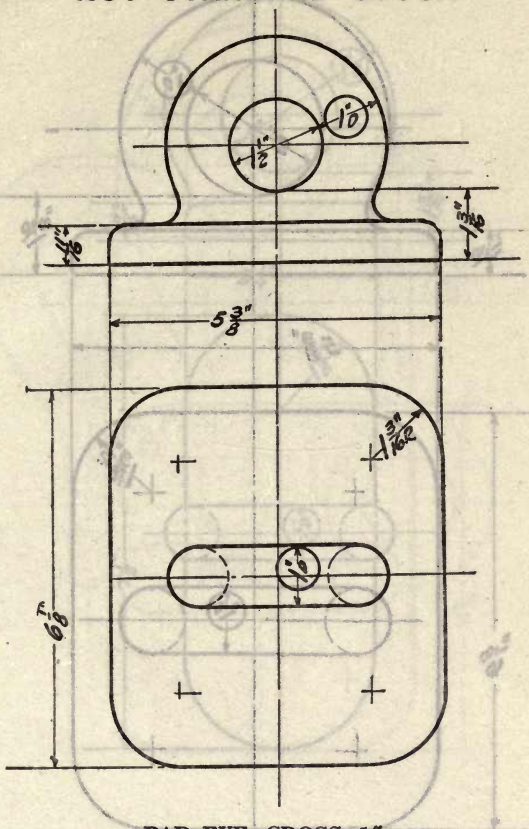

PAD EYE, CROSS, 1″

Eye, 1 1/2″ Size of pad, 6 1/8″ x 5 3/8″ x 11/16″

Weight, lbs. Die number, 1216-N
Former die number, (2-66)

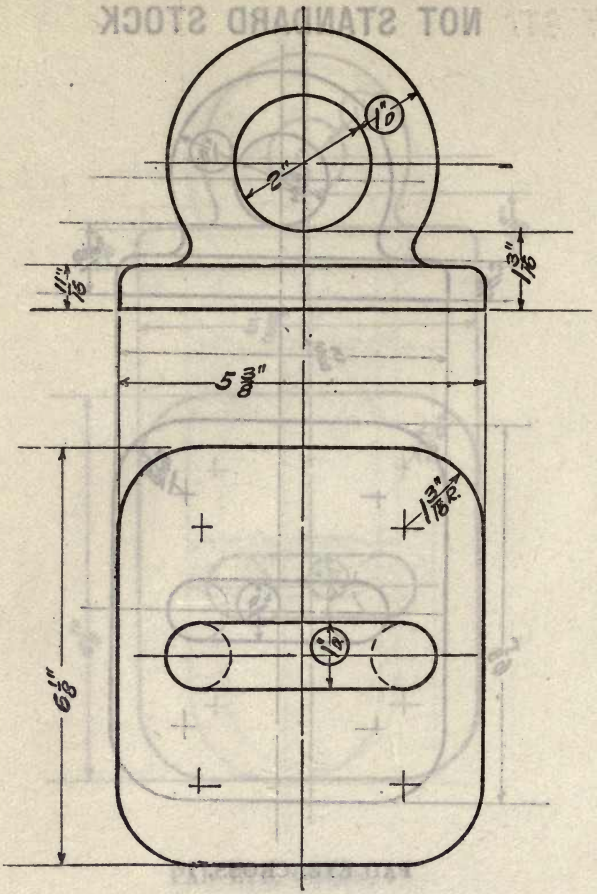

PAD EYE, CROSS, 1″

Eye, 2″ **Size of pad, 6 1/8″ x 5 3/8″ x 11/16″**

Weight (steel), 6.5 lbs. **Die number, 1217-MN**
Former die numbers, (2-68) (2-68)

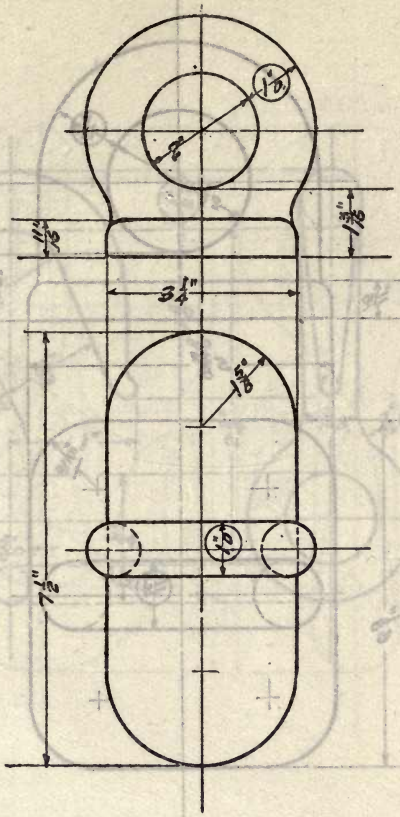

PAD EYE, CROSS, 1″

Eye, 2″ Size of pad, 7 1/2″ x 3 1/4″ x 11/16″

Weight, lbs. **Die number, 1218-N**
Former die number, (2-64)

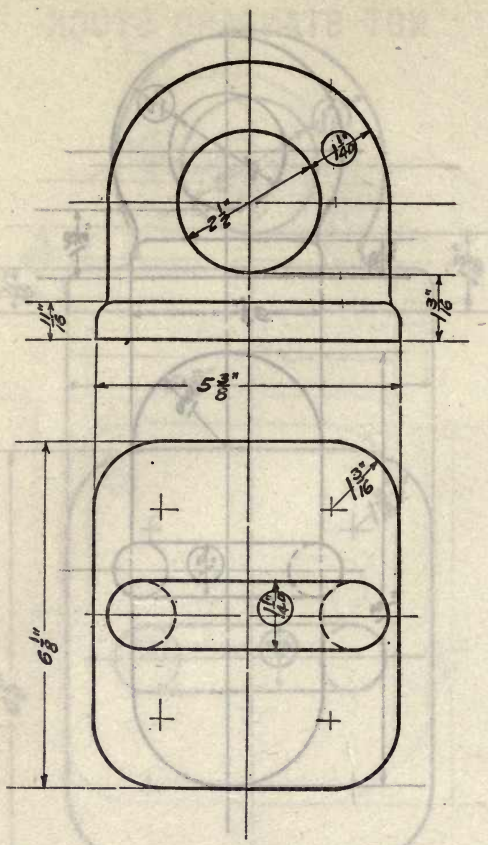

PAD EYE, CROSS, 1 1/4″

Eye, 2 1/2″ Size of pad, 6 1/8″ x 5 3/8″ x 11/16″

Weight, lbs. **Die number, 1219-N**
Former die number, (2-69)

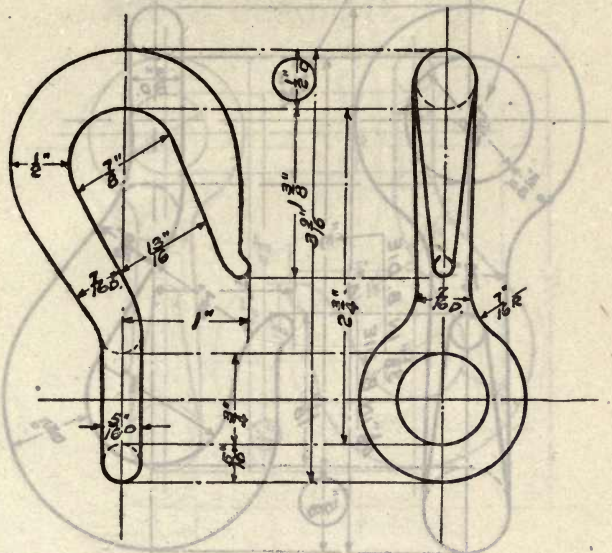

HOOK, SINGLE, SIDE, 1/2″

Weight (steel), 0.28 lb.

Die number, 1220-Y
Former die number, (155)

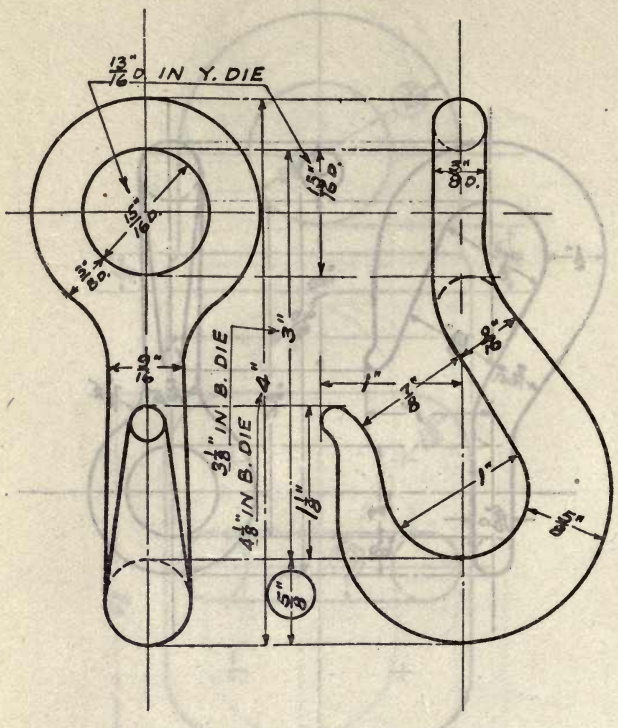

HOOK, SINGLE, SIDE, 5/8″

Weight (steel), 0.50 lb. **Die number, 1221-NMBY**
Former die numbers, (5-28) (5-28) (50) (143)

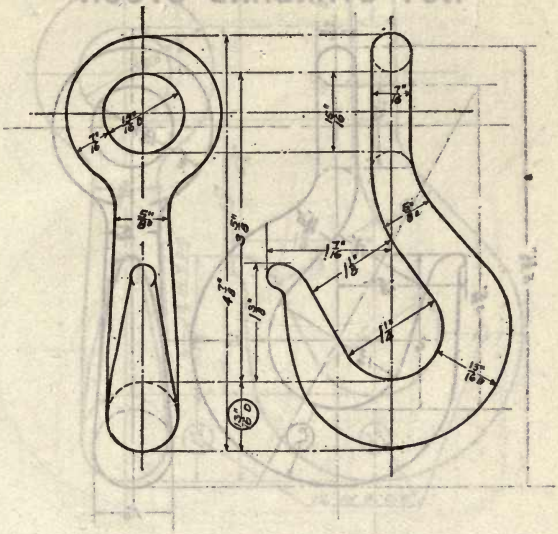

HOOK, SINGLE, SIDE, 13/16″

Weight (steel), 0.81 lb. **Die number, 1222-NMY**
Former die numbers, (5-30) (5-30) (144)

NOT STANDARD STOCK

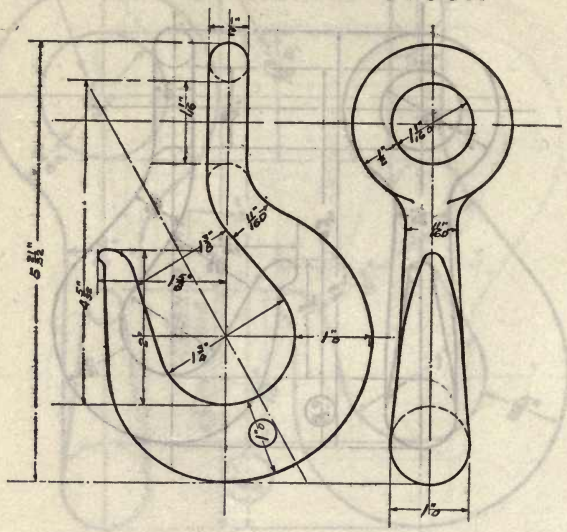

HOOK, SINGLE, SIDE, 1″

Weight, lbs. Die number, 1223-B
Former die number, (147)

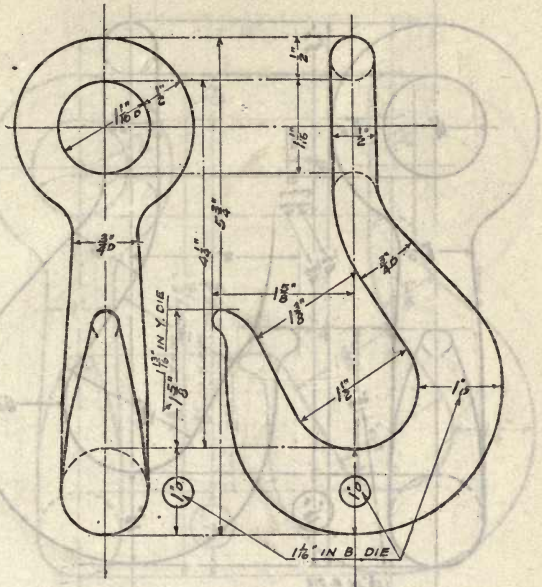

HOOK, SINGLE, SIDE, 1″

Weight (steel), 1.4 lbs. **Die number, 1224-NMBY**
Former die numbers, (5-32) (5-32) (51) (145)

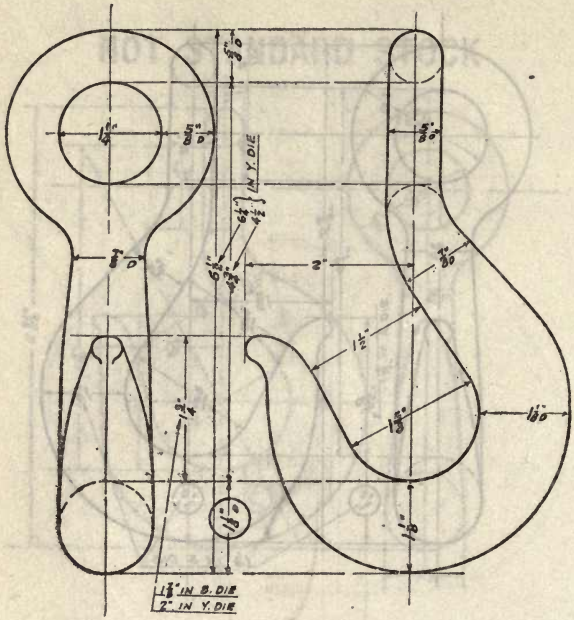

HOOK, SINGLE, SIDE, 1 1/8″

Weight (steel), 2.4 lbs. **Die number, 1225-NMBY**
Former die numbers, (5-34) (5-34) (173) (146)

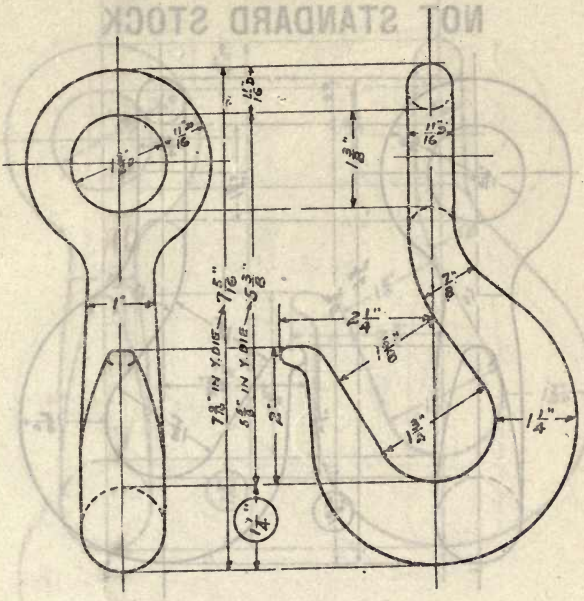

HOOK, SINGLE, SIDE, 1 1/4″

Weight (steel), 3.3 lbs. **Die number, 1226-NMBY**
Former die numbers, (5-37) (5-37) (178) (147)

NOT STANDARD STOCK

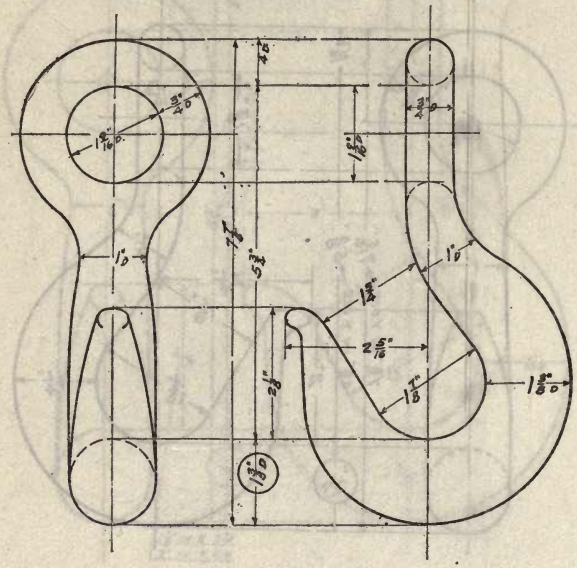

HOOK, SINGLE, SIDE, 1 3/8″

Weight (steel), 4.1 lbs. **Die number, 1227-MN**
Former die numbers, (5-38) (5-38)

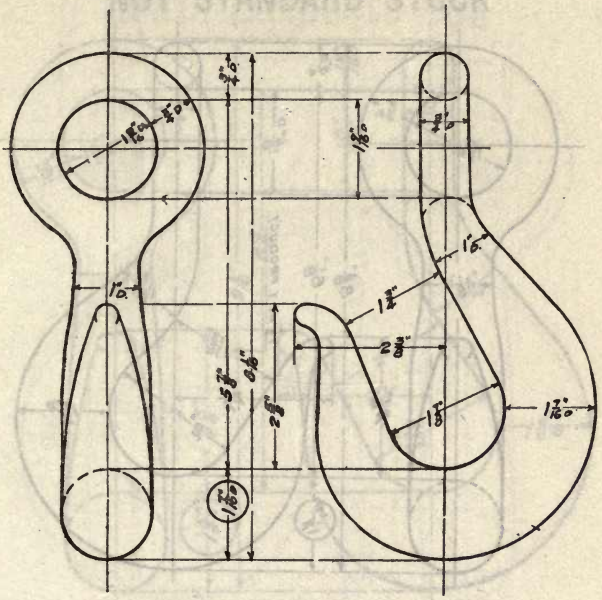

HOOK, SINGLE, SIDE, 1 7/16″

Weight (steel), 4.1 lbs. **Die number, 1228-YB**
Former die numbers, (148) (334)

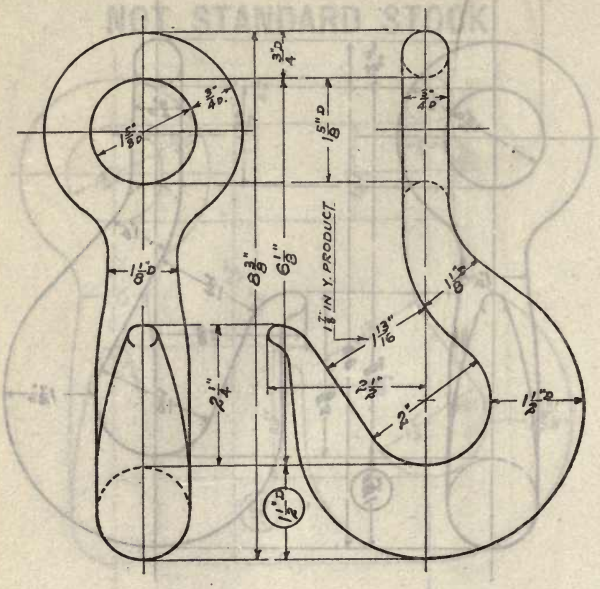

HOOK, SINGLE, SIDE, 1 1/2″

Weight (steel), 4.9 lbs. **Die number, 1229-MNY**
Former die numbers, (5-40) (5-40) (168)

NOT STANDARD STOCK

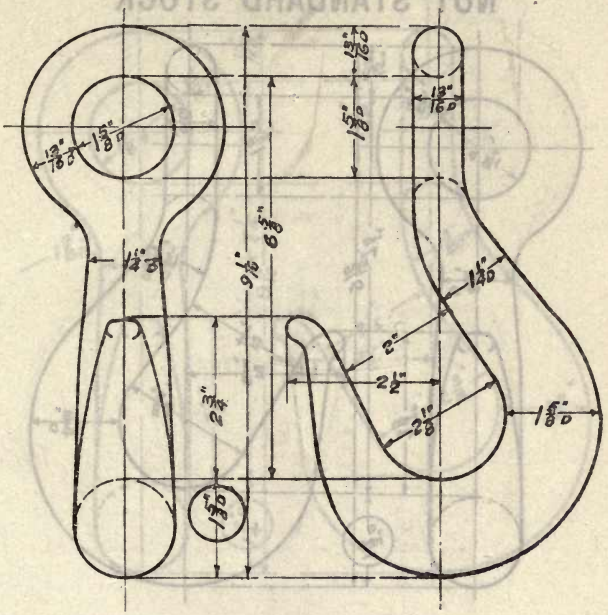

HOOK, SINGLE, SIDE, 1 5/8″

Weight (steel), 5.6 lbs. **Die number, 1230-NY**
Former die numbers, (5-42) (149)

NOT STANDARD STOCK

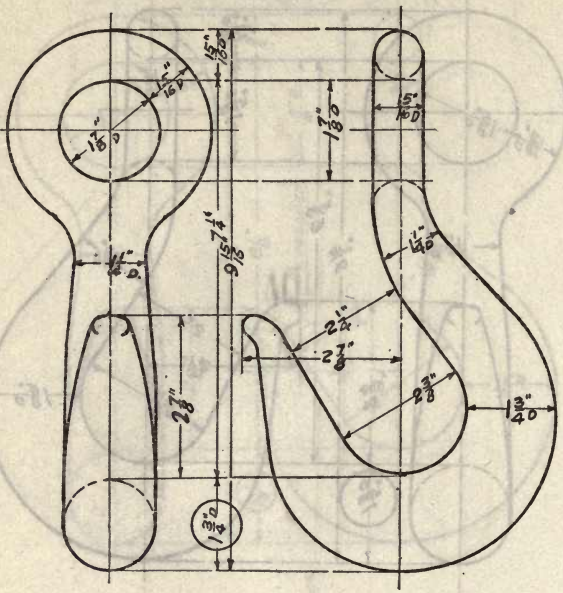

HOOK, SINGLE, SIDE, 1 3/4″

Weight (steel), 7.8 lbs. Die number, 1231-NM
Former die numbers, (5-44) (5-44)

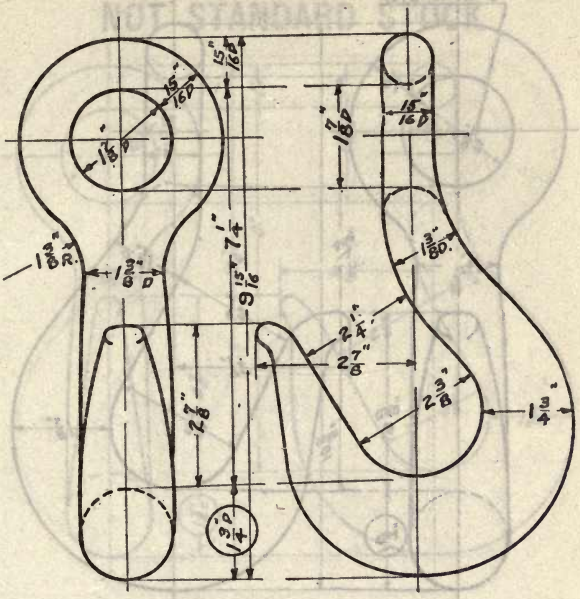

HOOK, SINGLE, SIDE, 1 3/4″

Weight (steel), 7.8 lbs. **Die number, 1232-Y**
Former die number, (150)

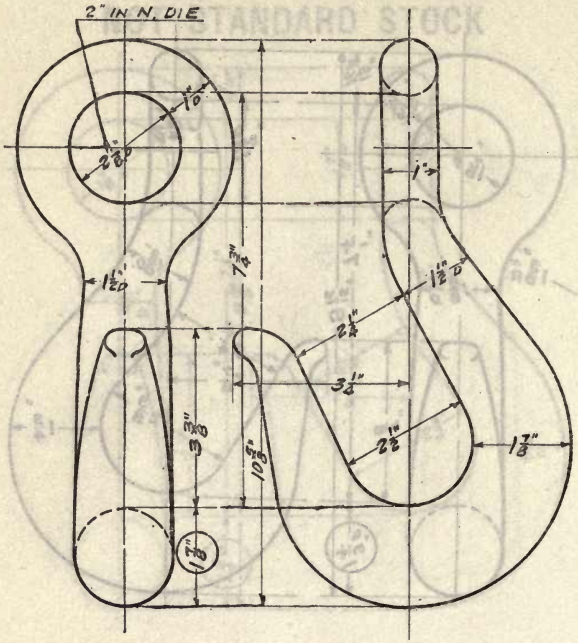

HOOK, SINGLE, SIDE, 1 7/8″

Weight (steel), 9.5 lbs. **Die number, 1233-NM**
Former die numbers, (5-47) (5-47)

NOT STANDARD STOCK

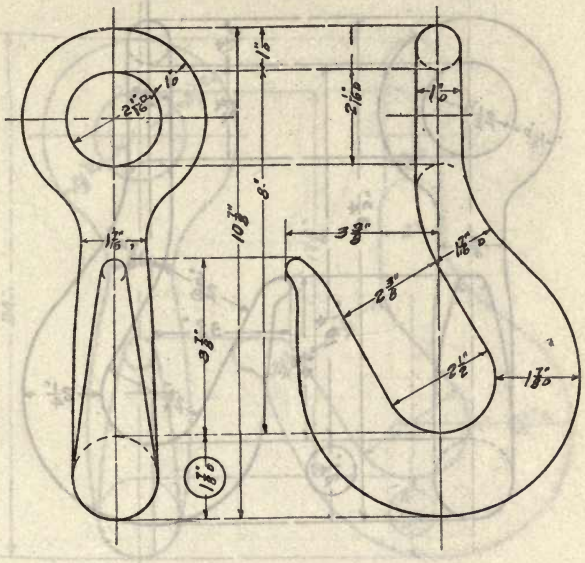

HOOK, SINGLE, SIDE, 1 7/8″

Weight (steel), 9.5 lbs.

Die number, 1234-Y
Former die number, (151)

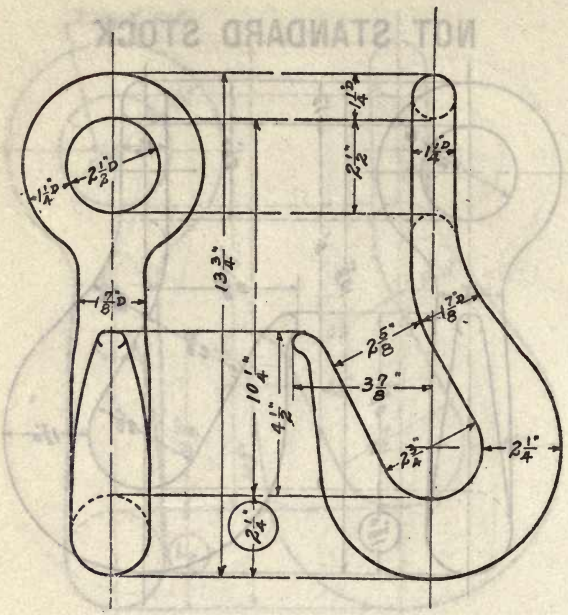

HOOK, SINGLE, SIDE, 2 1/4″

Weight (steel), 18.5 lbs. **Die number, 1235-YM**
Former die number, (174)

NOT STANDARD STOCK

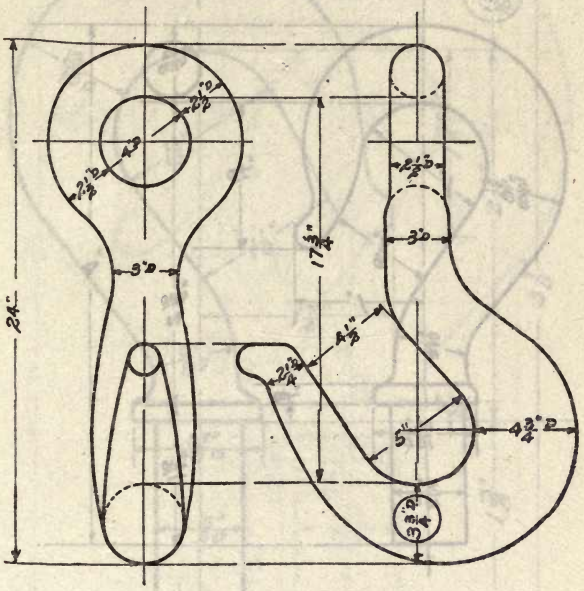

HOOK, SINGLE, SIDE, 3 3/4″

Weight, lbs. Die number, 1236-B
Former die number, (302)

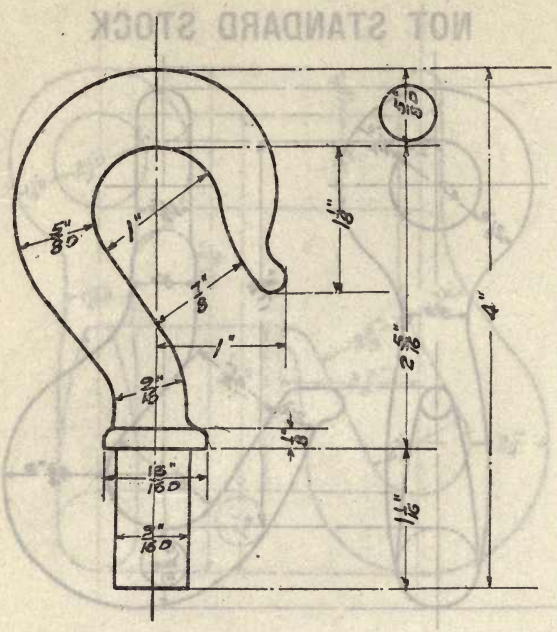

HOOK, SWIVEL, 5/8″

Weight, lbs. Die number, 1237-MN
Former die numbers, (5-74) (5-74)

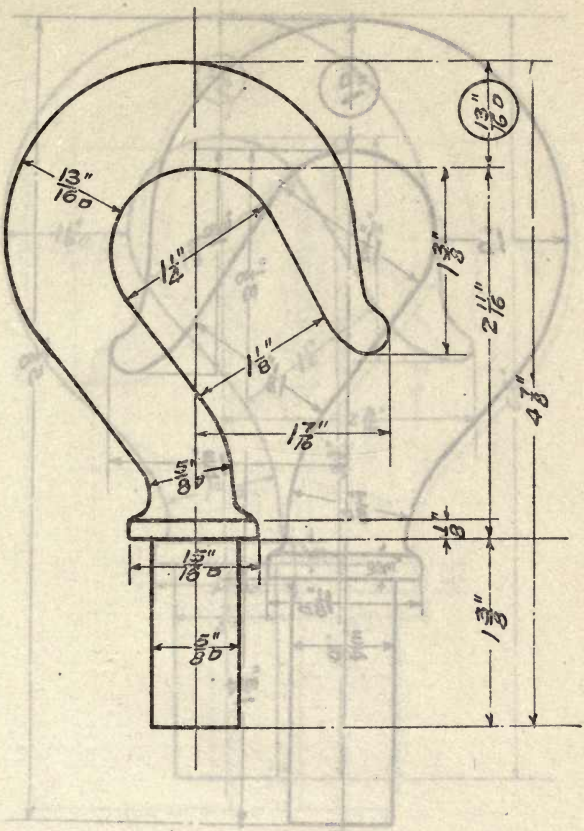

HOOK, SWIVEL, 13/16″

Weight, **lbs.** **Die number, 1238-YM**
Former die number, (523)

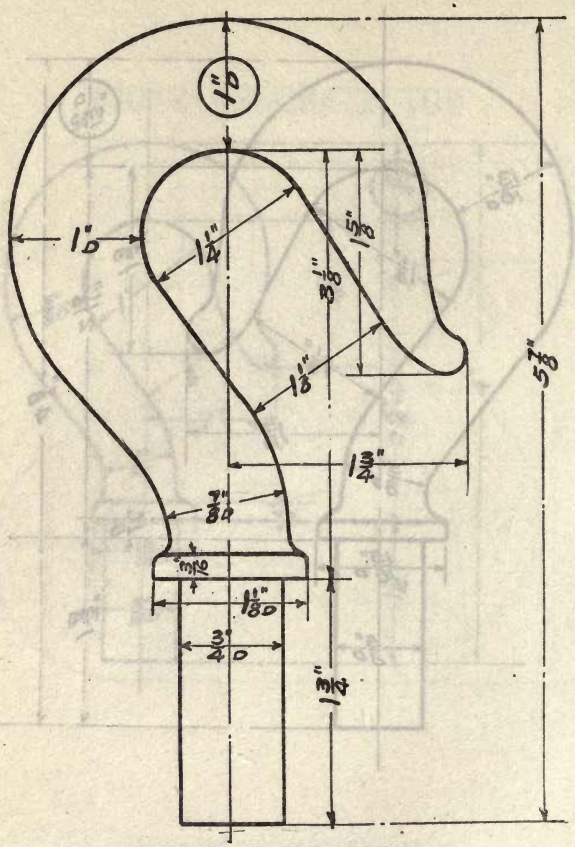

HOOK, SWIVEL, 1″

Weight (steel), 2.1 lbs. Die number, 1239-NMBY
Former die numbers, (5-63) (5-63) (194) (172)

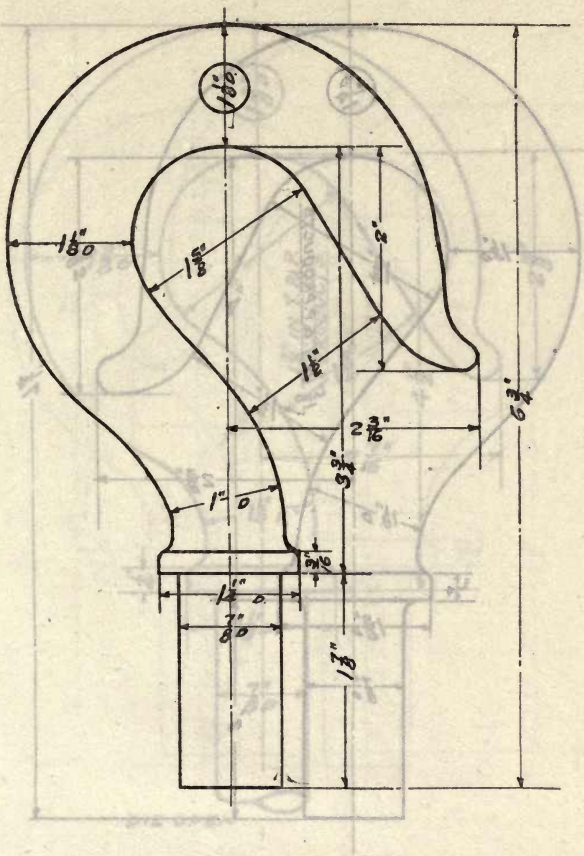

HOOK, SWIVEL, 1 1/8″

Weight (steel), 2.6 lbs. Die number, 1240-NMBPY
Former die numbers, (5-64) (5-64) (80) (147) (162)

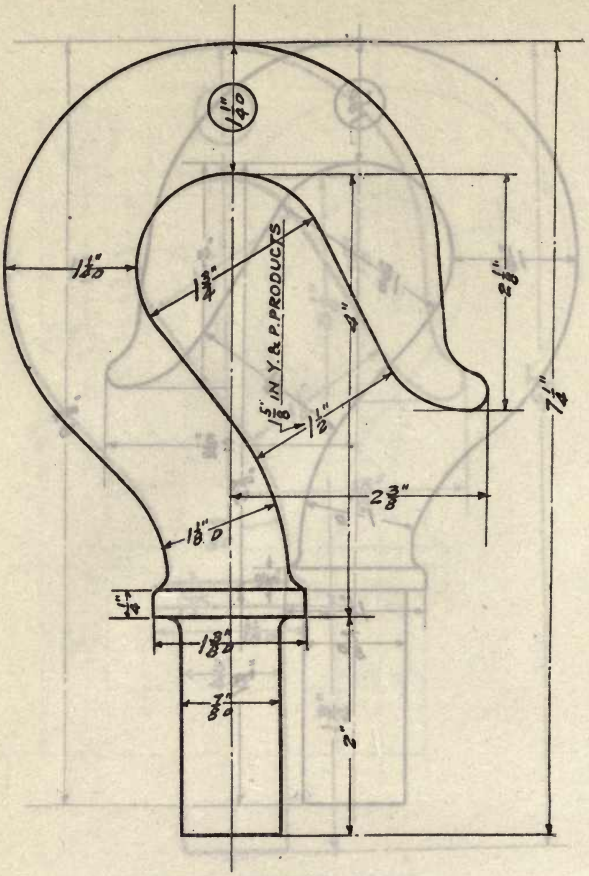

HOOK, SWIVEL, 1 1/4″

Weight (steel), 3.1 lbs. Die number, 1241-NMBPY
Former die numbers, (5-65) (5-65) (65) (148) (136)

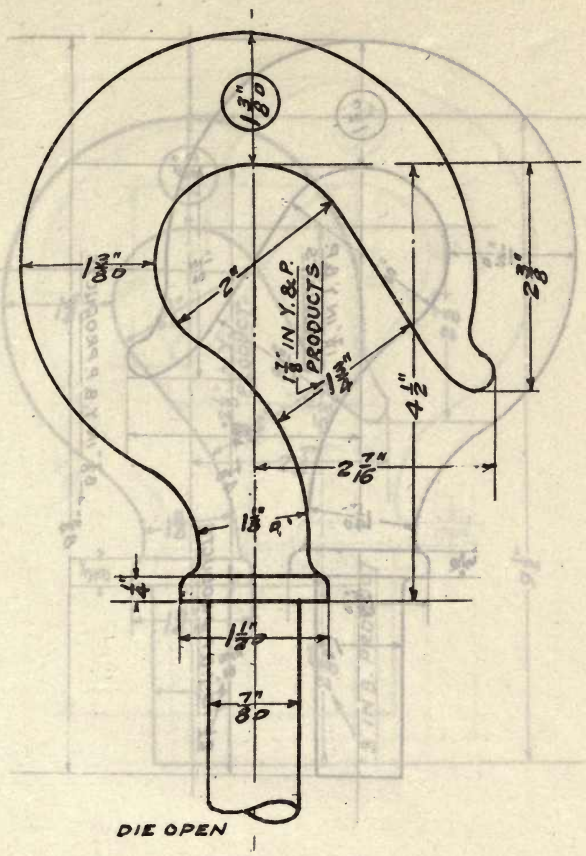

HOOK, SWIVEL, 1 3/8″

Weight (steel), 4.2 lbs. Die number, 1242-NMBPY
Former die numbers, (5-66) (5-66) (120) (149) (137)

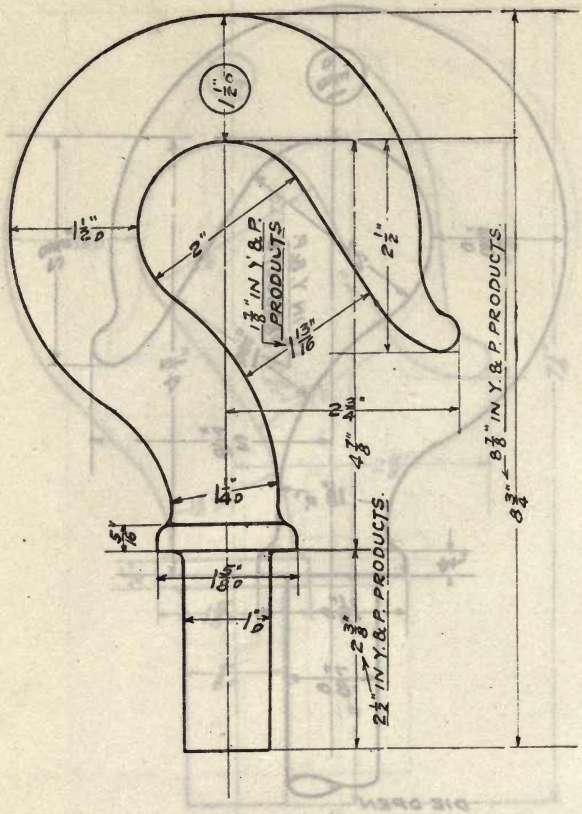

HOOK, SWIVEL, 1 1/2″

Weight (steel), 5.3 lbs. **Die number, 1243-NMBPY**
Former die numbers, (5-67) (5-67) (186) (150) (138)

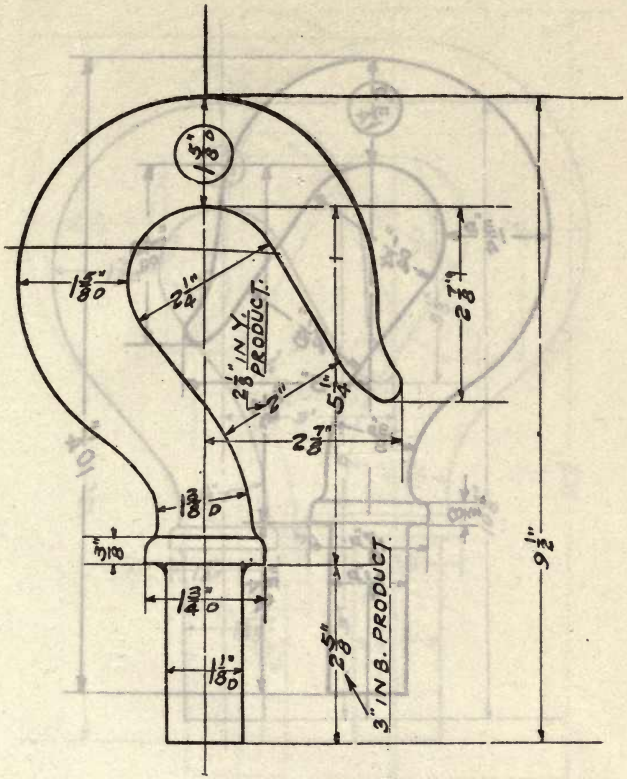

HOOK, SWIVEL, 1 5/8″

Weight (steel), 6.6 lbs. **Die number, 1244-NMBY**
Former die numbers, (5-68) (5-68) (184) (139)

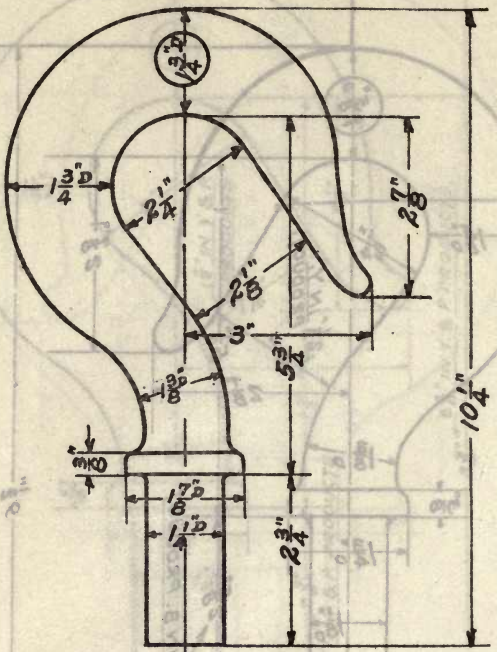

HOOK, SWIVEL, 1 3/4″

Weight, lbs. Die number, 1245-MY
Former die numbers, (5-69) (522)

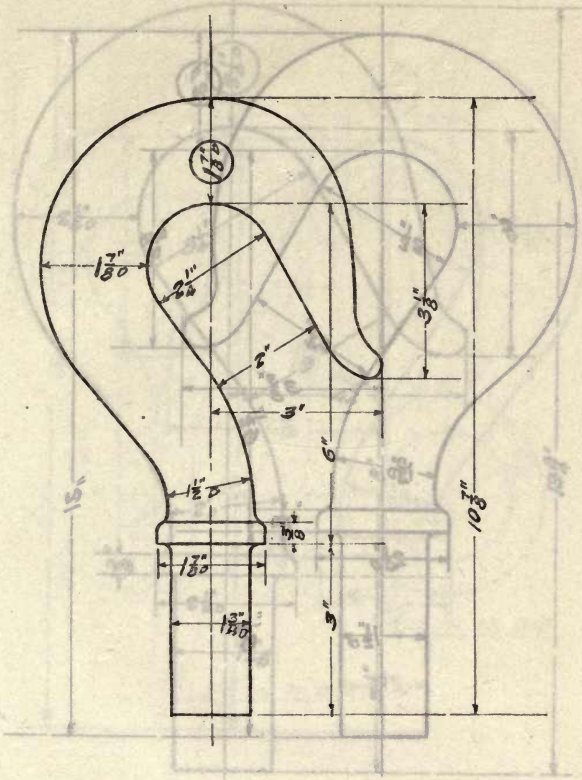

HOOK, SWIVEL, 1 7/8″

Weight, lbs. Die number, 1246-MNB
Former die numbers, (5-70) (5-70) (115)

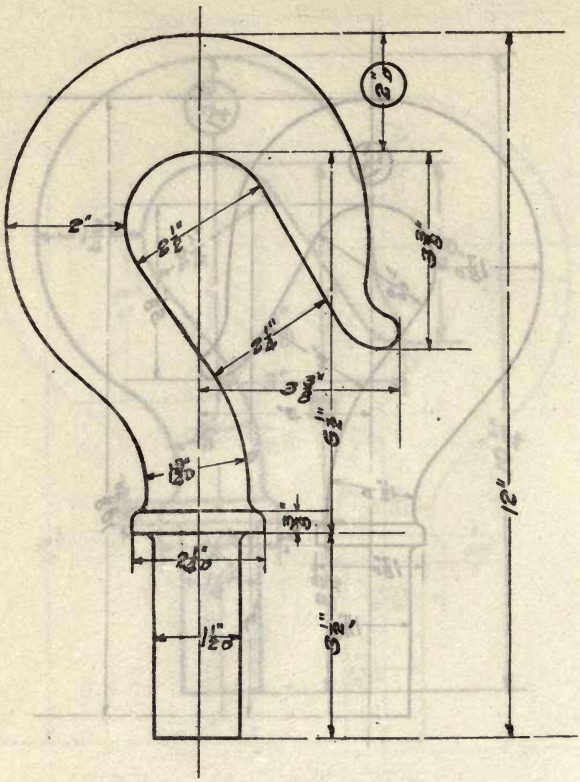

HOOK, SWIVEL, 2″

Weight (steel), 12 lbs. **Die number, 1247-N**
Former die number, (5-71)

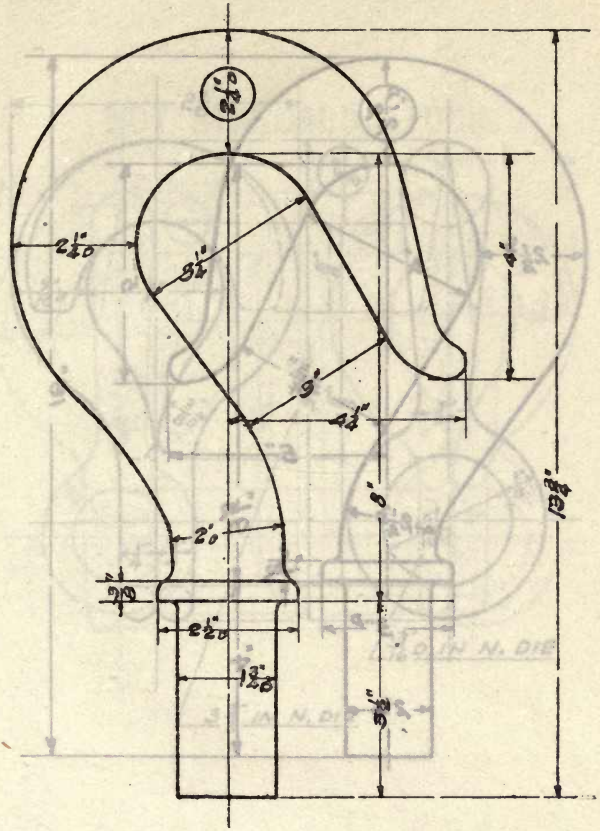

HOOK, SWIVEL, 2 1/4″

Weight, lbs. **Die number, 1248-NM**
Former die number, (5-72)

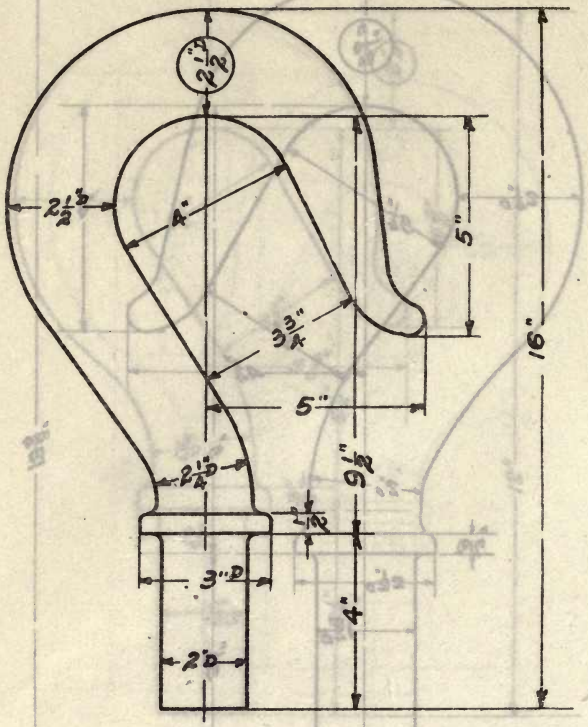

HOOK, SWIVEL, 2 1/2″

Weight, **lbs.** **Die number, 1249-NM**
Former die number, (5-73)

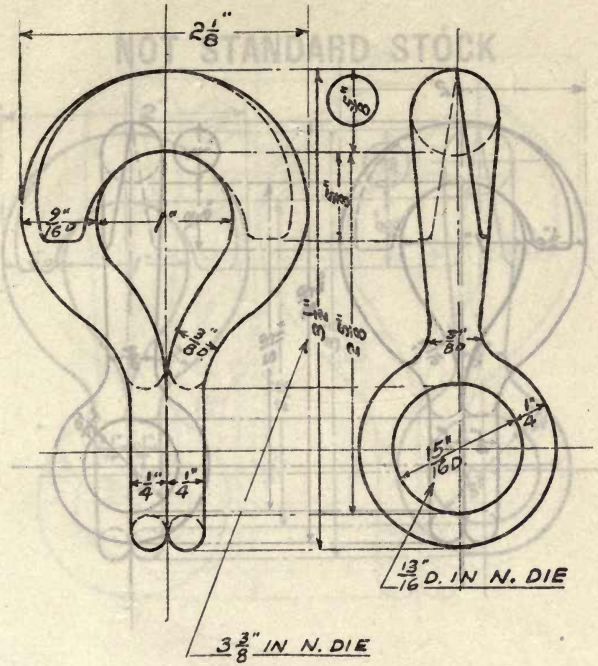

HOOK, SISTER, 5/8″

Weight (steel), 0.50 lb. **Die number, 1250-NMY**
Former die numbers, (5-29) (5-29) (152)

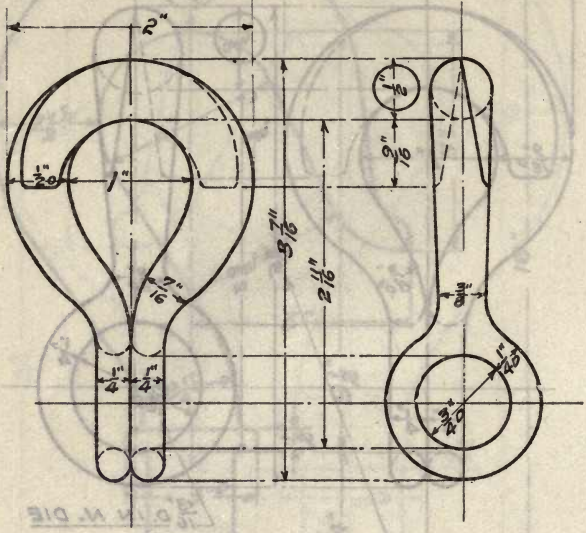

HOOK, SISTER, 1/2″

Weight (steel), 0.38 lb. **Die number, 1251-Y**
Former die number, (164)

NOT STANDARD STOCK

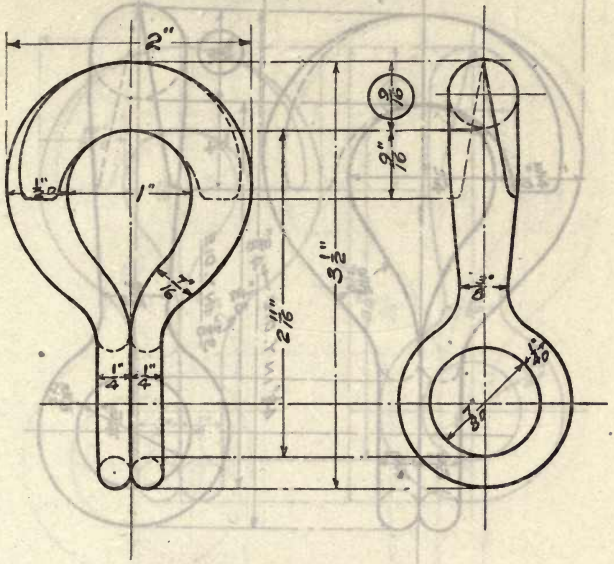

HOOK, SISTER, 9/16″

Weight (steel), 0.44 lb. **Die number, 1252-Y**
Former die number, (165)

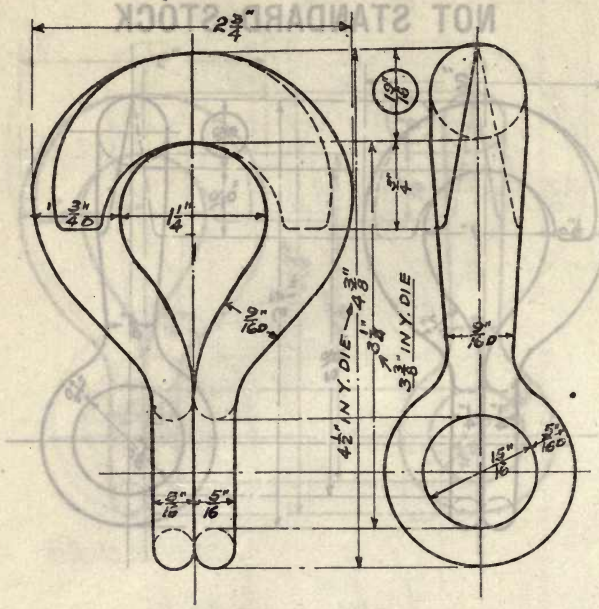

HOOK, SISTER, 13/16″

Weight (steel), 1.0 lb. **Die number, 1253-NMBY**
Former die numbers, (5-31) (5-31) (171) (153)

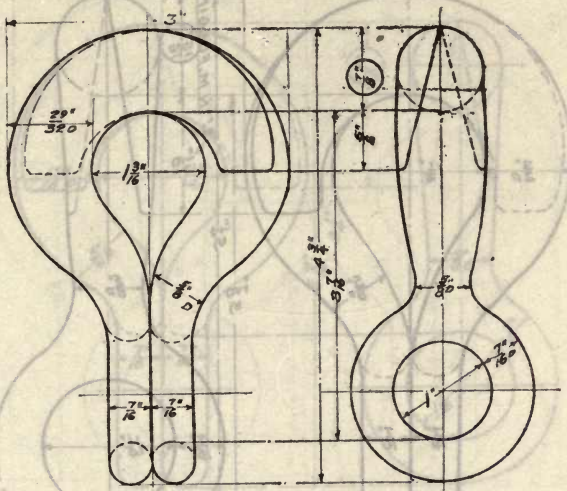

HOOK, SISTER, 7/8″

Weight, lbs. **Die number, 1251-B**
Former die number, (52)

NOT STANDARD STOCK

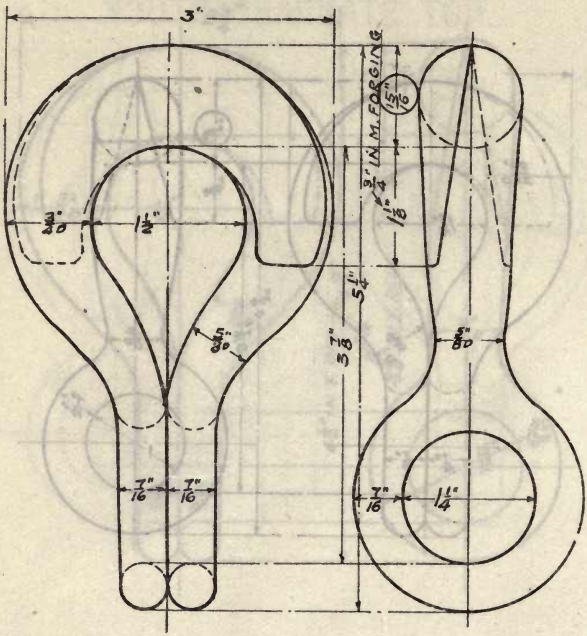

HOOK, SISTER, 15/16″

Weight, . lbs. Die number, 1255-NMB
Former die numbers, (5-35) (5-35) (174)

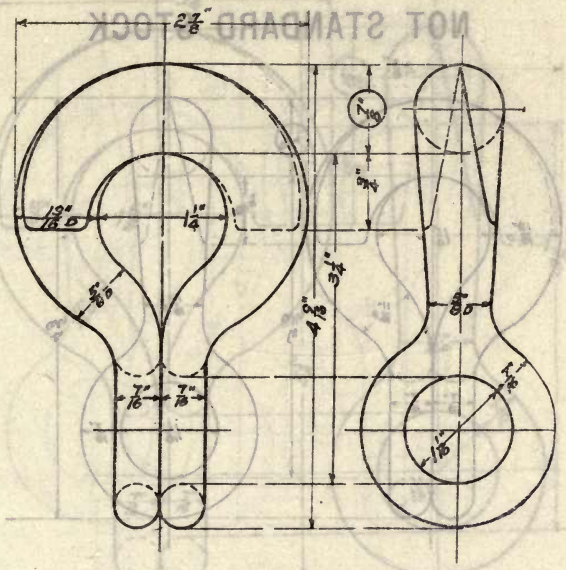

HOOK, SISTER, 7/8″

Weight (steel), 1.2 lbs.

Die number, 1256-Y
Former die number, (154)

NOT STANDARD STOCK

NOT STANDARD STOCK

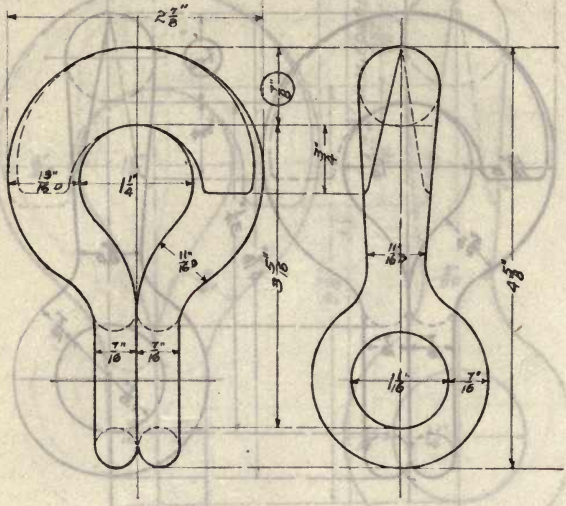

HOOK, SISTER, 7/8″

Weight (steel), 1.2 lbs. Die number, 1257-NMB
Former die numbers, (5-33) (5-33) (170)

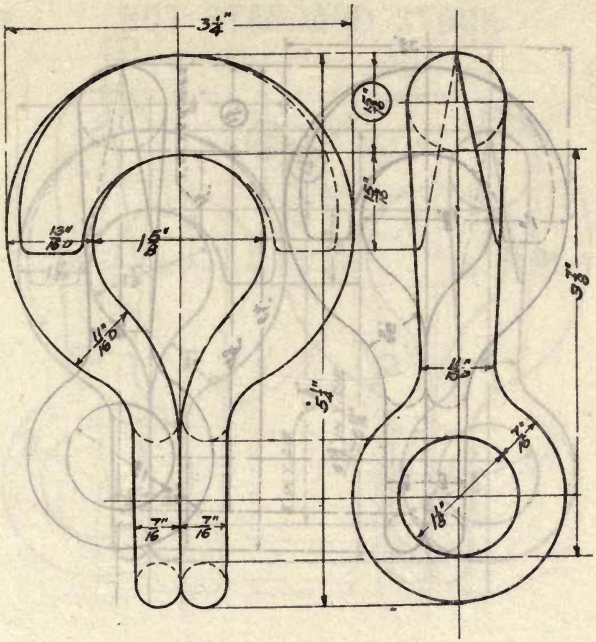

HOOK, SISTER, 15/16″

Weight (steel), 1.5 lbs.

Die number, 1258-Y
Former die number, (156)

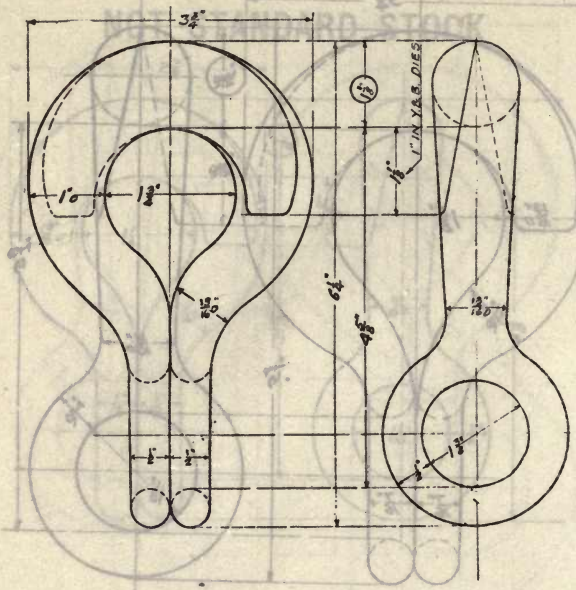
3¼"
1" IN N.M.B. DIES
1⅛"
1⅜"
⅝"
⅝"
⅝

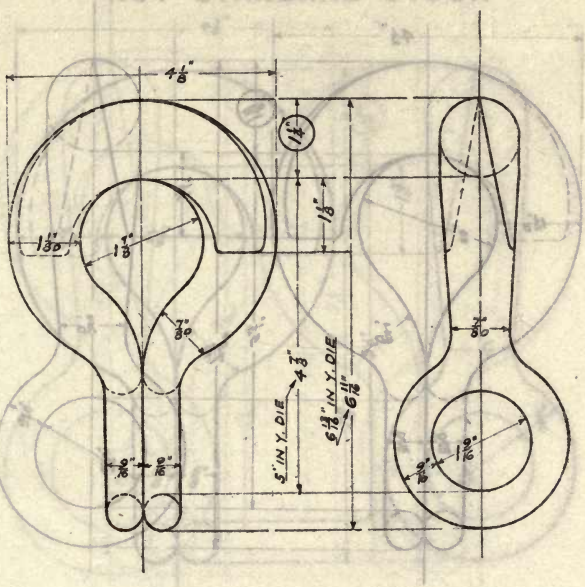

HOOK, SISTER, 1 1/4″

Weight (steel), 3.4 lbs. Die number, 1260-NMBY
Former die numbers, (5-39) (5-39) (177) (158)

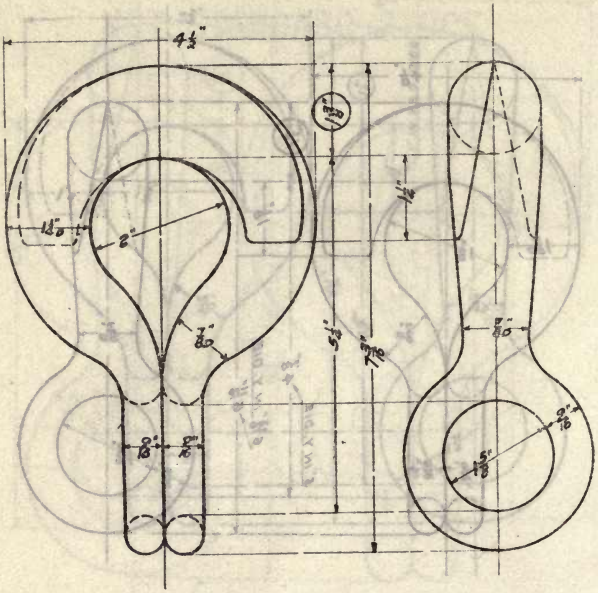

HOOK, SISTER, 1 3/8″

Weight (steel), 3.7 lbs. **Die number, 1261-NBY**
Former die numbers, (5-41) (179) (163)

NOT STANDARD STOCK

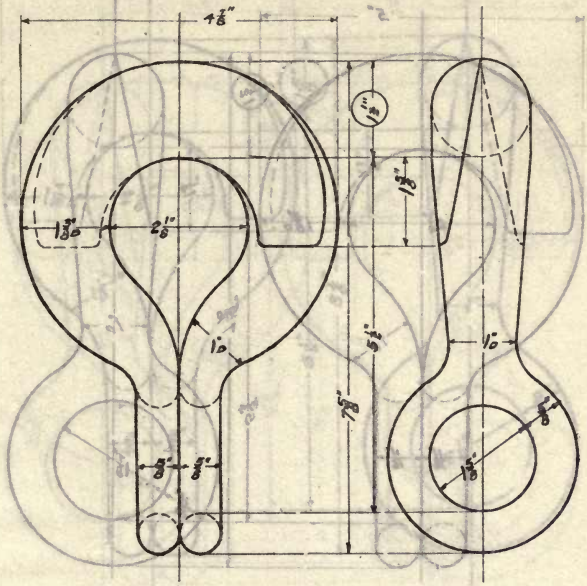

HOOK, SISTER, 1 1/2″

Weight (steel), 4.9 lbs. Die number, 1262-NY
Former die numbers, (5-43) (159)

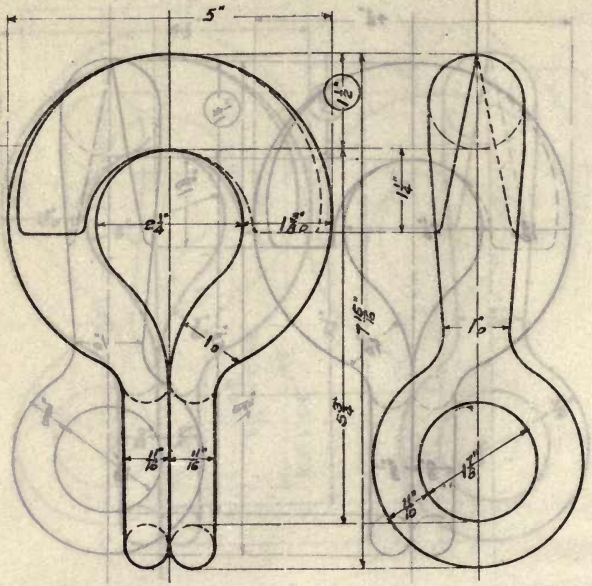

HOOK, SISTER, 1 1/2″

Weight (steel), 6.1 lbs. Die number, 1263-NM
Former die numbers, (5-45) (5-45)

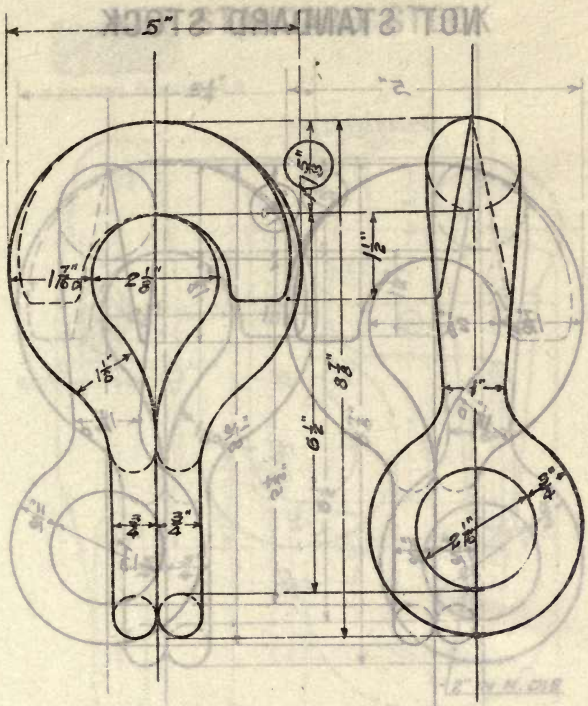

HOOK, SISTER, 1 5/8″

Weight (steel), 7.3 lbs. **Die number, 1264-Y**
Former die number, (161)

NOT STANDARD STOCK

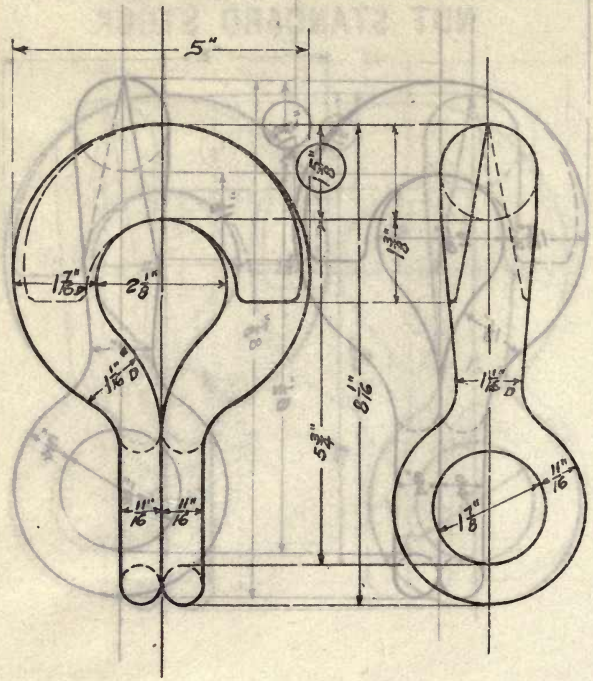

HOOK, SISTER, 1 5/8″

Weight (steel), 6.1 lbs. **Die number, 1265-Y**
Former die number, (160)

NOT STANDARD STOCK

NOT STANDARD STOCK

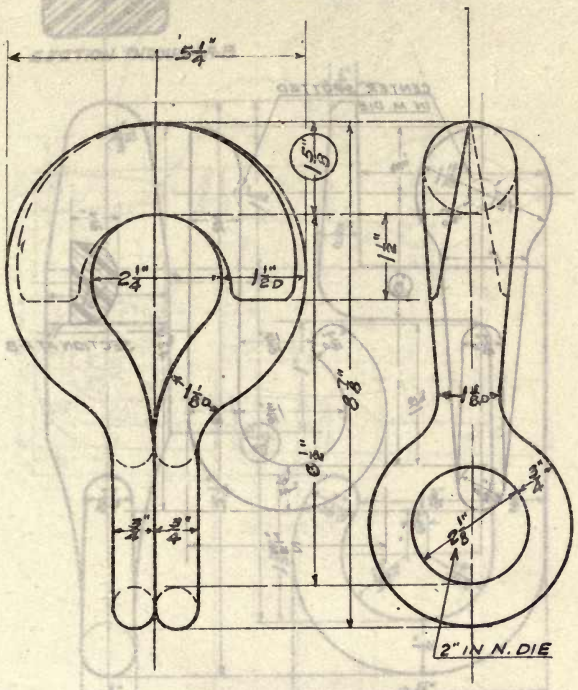

HOOK, SISTER, 1 5/8″

Weight (steel), 7.3 lbs. **Die number, 1266-NM**
Former die numbers, (5-48) (5-48)

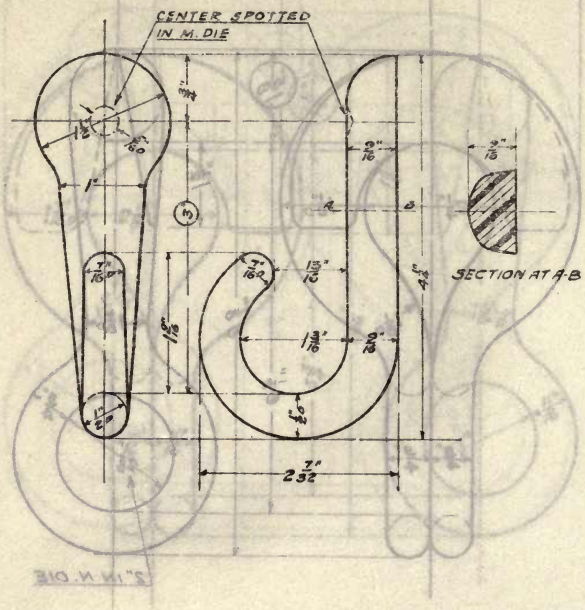

HOOK, HAMMOCK, 3″

Weight (steel), 0.66 lb. **Die number, 1267-MYB**
Former die numbers, (3-8) (141) (54)

NOT STANDARD STOCK

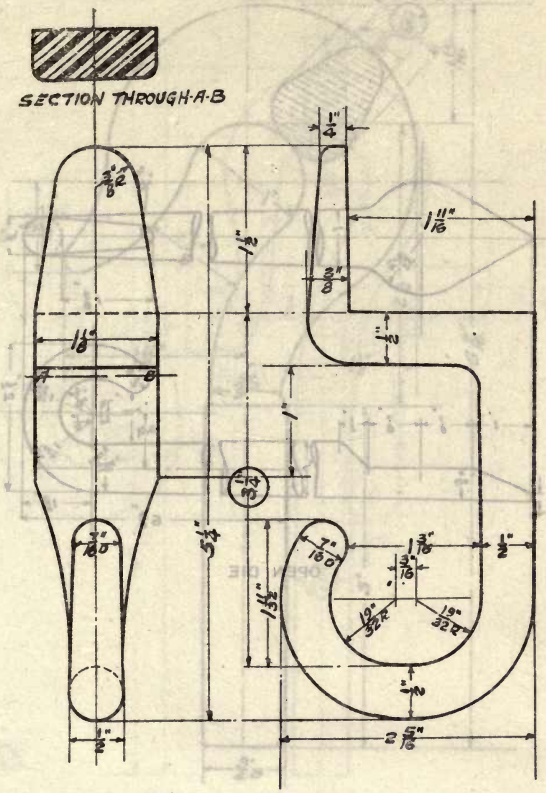

HOOK, HAMMOCK, 3 1/4″

Weight (steel), 1.5 lbs. **Die number, 1268-N**
Former die number, (3-58)

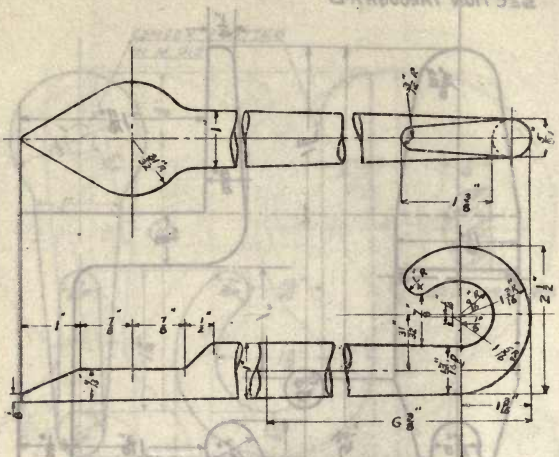

HOOK, HAMMOCK

Weight (steel), lbs. **Die number, 1269-Y**
Former die number, (362)

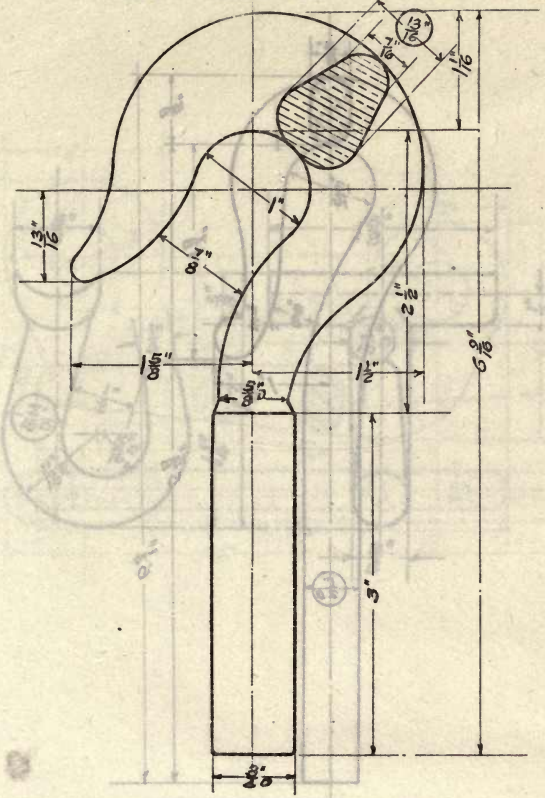

HOOK, LIFE LINE, 13/16″

Weight, lbs. Die number, 1270-YN
Former die numbers, (508) (3-94)

NOT STANDARD STOCK

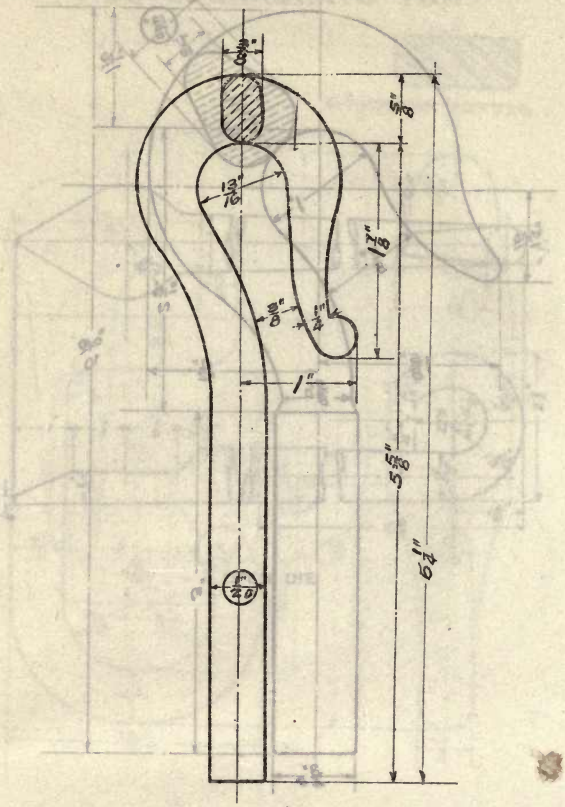

HOOK, LIFE LINE, 1/2″

Weight, lbs. **Die number, 1271-B**
Former die number, (78)

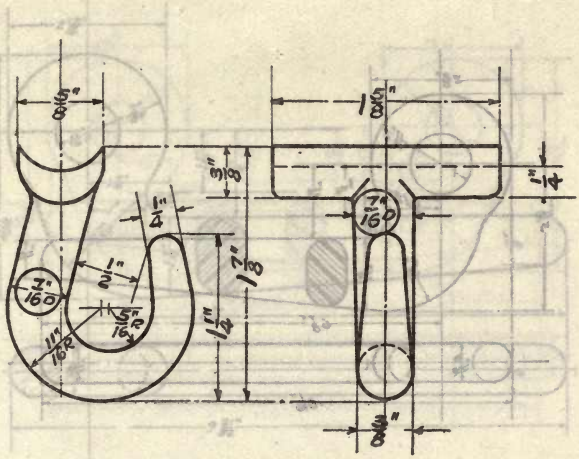

HOOK, AWNING, 7/16″

Weight (steel), 0.31 lb. **Die number, 1272-BM**
Former die number, (240)

NOT STANDARD STOCK

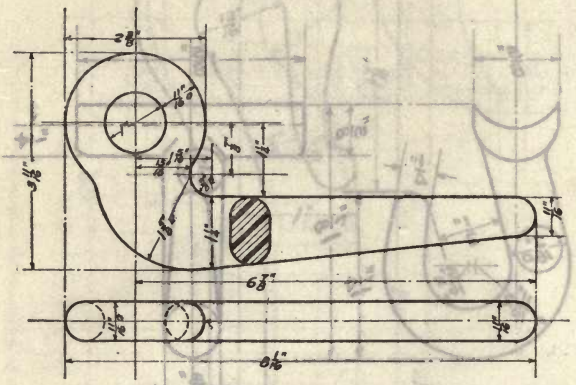

HOOK, PELICAN, 5/8″

For rigging screw for 5/8″ D. wire rope

Weight, lbs. **Die number, 1273-B**
Former die number, (197)

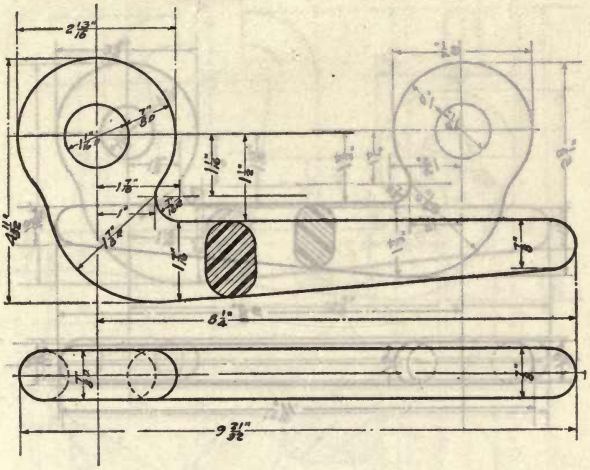

HOOK, PELICAN, 11/16″

For rigging screw for 11/16″ D. wire rope

Weight, **lbs.** **Die number, 1274-B**
Former die number, (212)

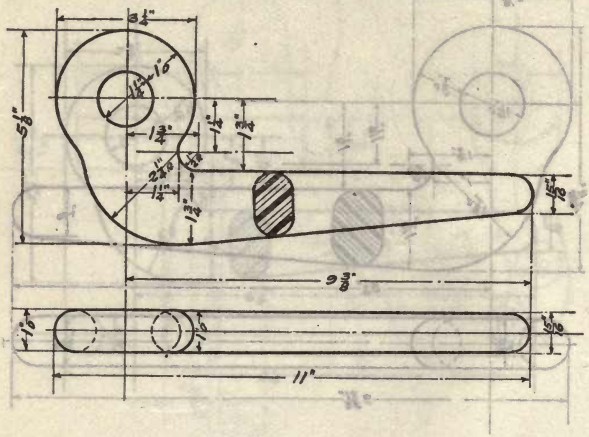

HOOK, PELICAN, 1″

For rigging screw for 1″ D. wire rope

Weight, lbs. **Die number, 1275-B**
Former die number, (135)

NOT STANDARD STOCK

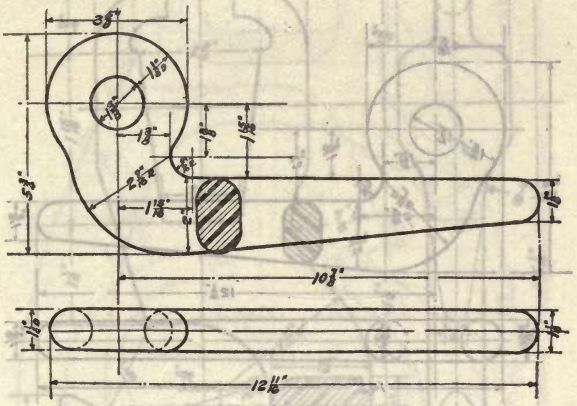

HOOK, PELICAN, 1 1/8″

For rigging screw for 1 1/8″ D. wire rope

Weight, lbs. Die number, 1276-B
Former die numbers, (205 and 198)

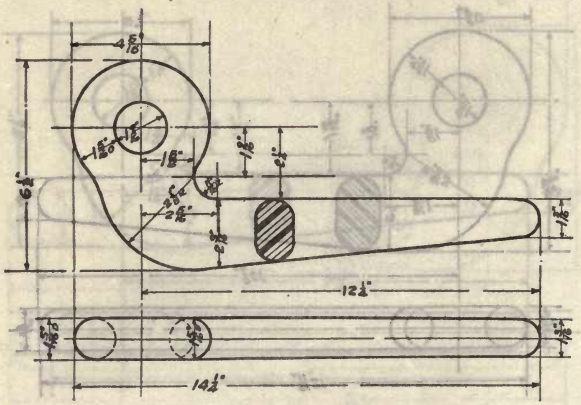

HOOK, PELICAN, 1 1/4"

For rigging screw for 1 1/4" D. wire rope

Weight, lbs. **Die number, 1277-B**
Former die number, (140)

NOT STANDARD STOCK

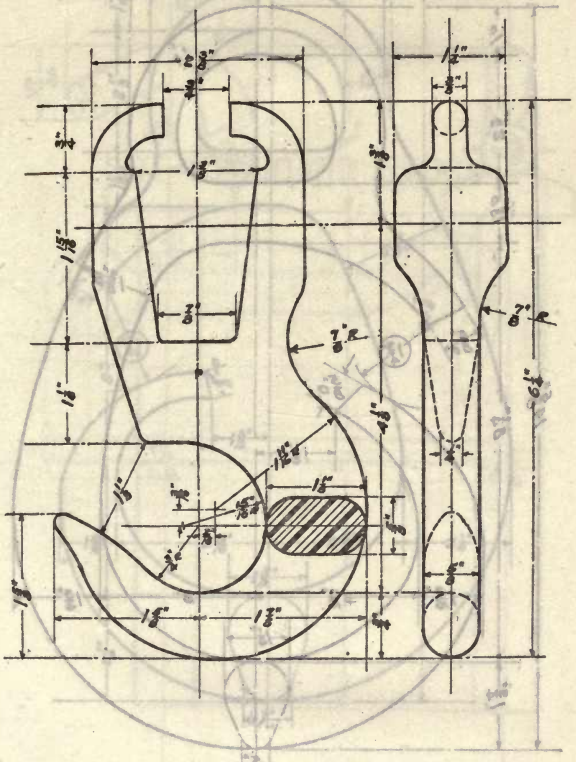

HOOK, TROLLEY, AMMUNITION

Weight (steel), 1.5 lbs. **Die number, 1278-Y**
Former die number, (416)

NOT STANDARD STOCK

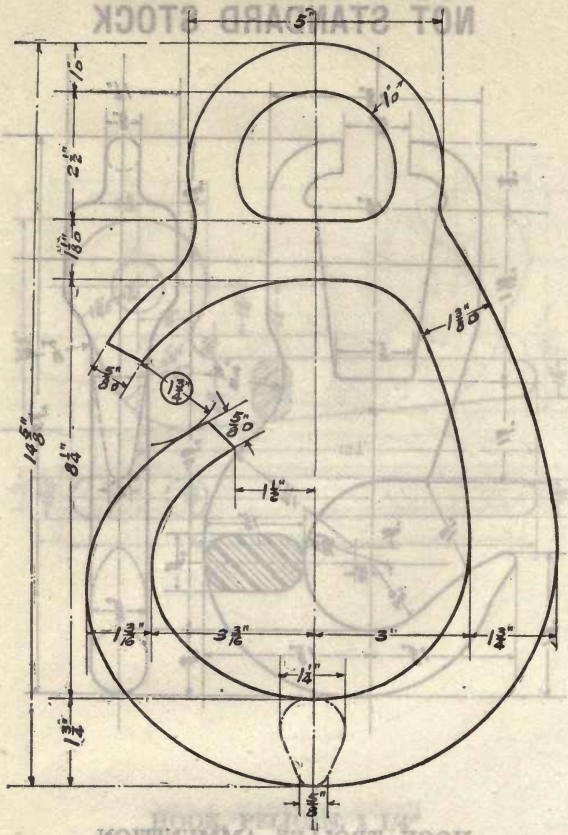

HOOK, COALING WHIP, 1 3/4″

Weight, lbs. **Die number, 1279-M**
Former die number, (3-48)

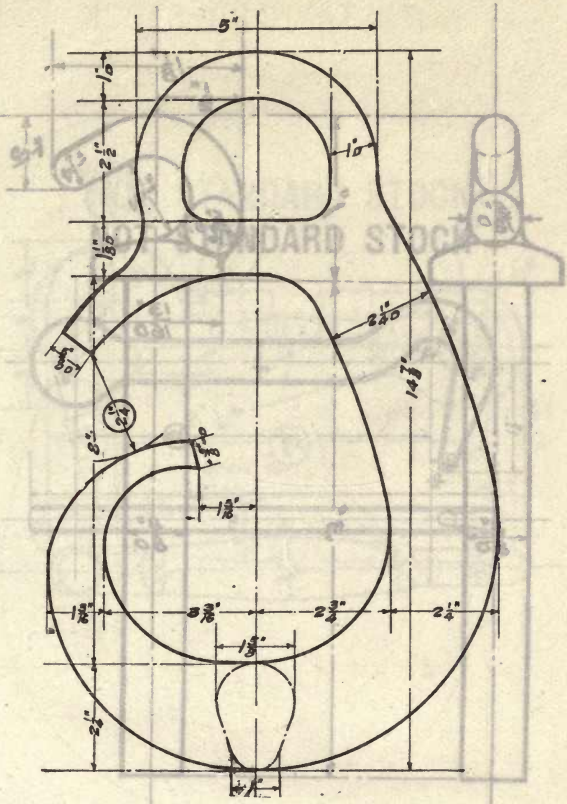

HOOK, COALING WHIP, 2 1/4″

Weight (steel), 16.0 lbs. **Die number, 1280-BM**
Former die number, (88)

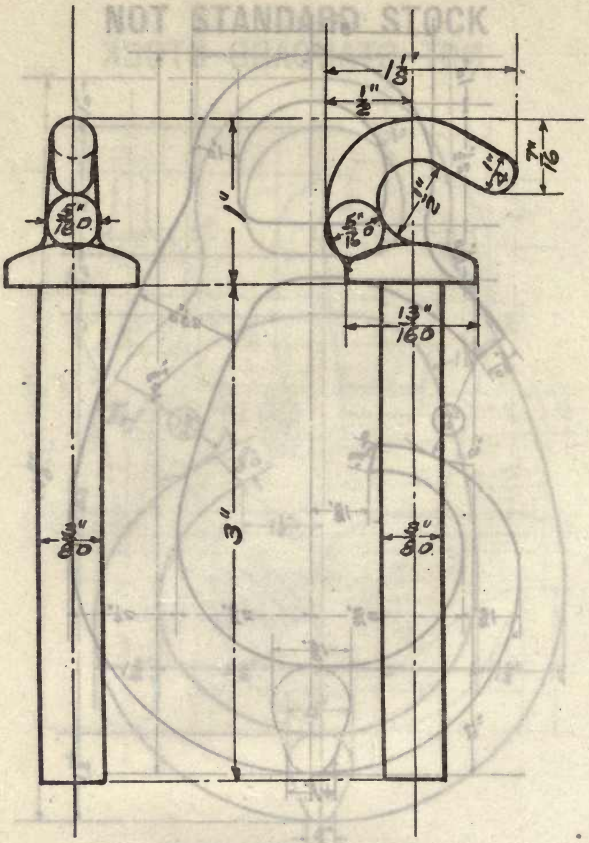

HOOK, LASHING, 5/16″

Weight (steel), 0.25 lb. Die number, 1281-MNBPY
Former die numbers, (3-9) (3-9) (43) (220) (41)

NOT STANDARD STOCK

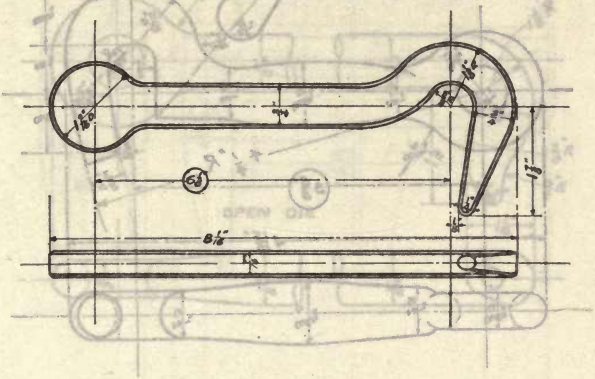

HOOK, DRY DOCK BLOCKING, 6 1/8″

Weight, **lbs.** **Die number, 1282-B**
Former die number, (148)

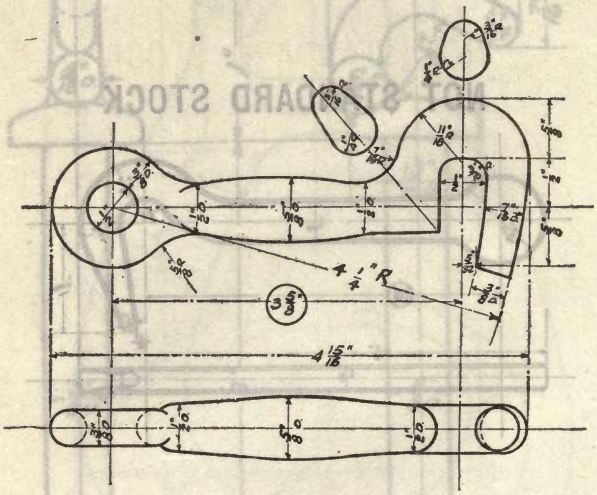

HOOK, DOOR, 3 5/8″

Weight (steel), 0.50 lb. **Die number, 1283-MN**
Former die numbers, (3-27) (3-27)

NOT STANDARD STOCK

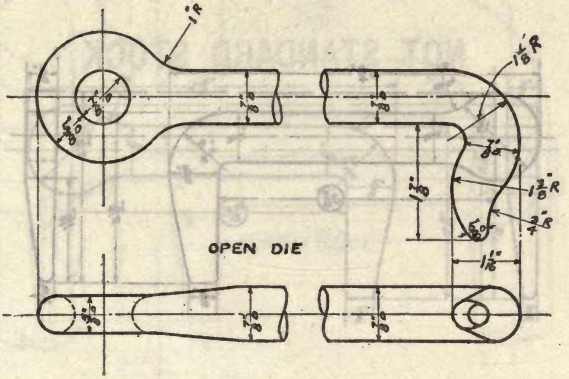

HOOK, COVER

Length, open die

Weight, lbs. **Die number, 1284-Y**
Former die number, (140)

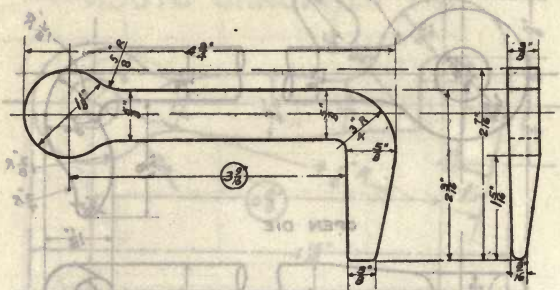

HOOK, TARPAULIN, 3 9/16″

Weight (brass), 0.41 lb. **Die number, 1285-Y**
Former die number, (134)

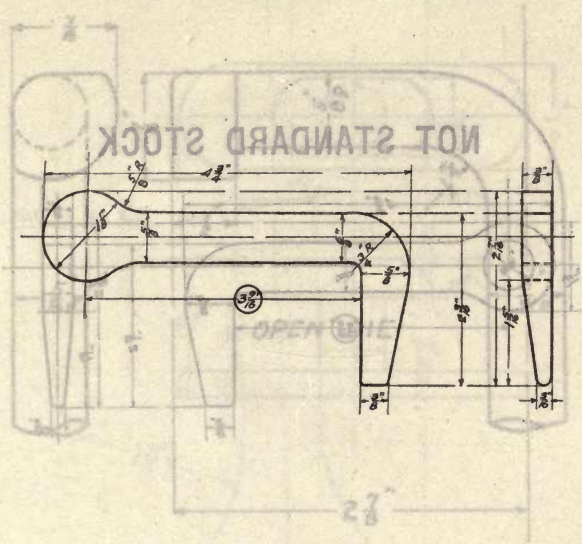

HOOK, TARPAULIN, 3 9/16″

Weight (brass), 0.41 lb. **Die number, 1286-Y**
Former die number, (135)

NOT STANDARD STOCK

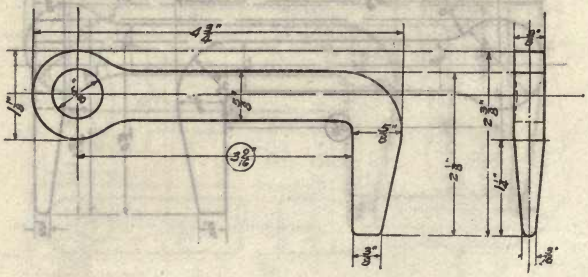

HOOK, TARPAULIN, 3 9/16″

Weight (brass), 0.50 lb. **Die number, 1287-M**
Former die number, (4-34)

NOT STANDARD STOCK

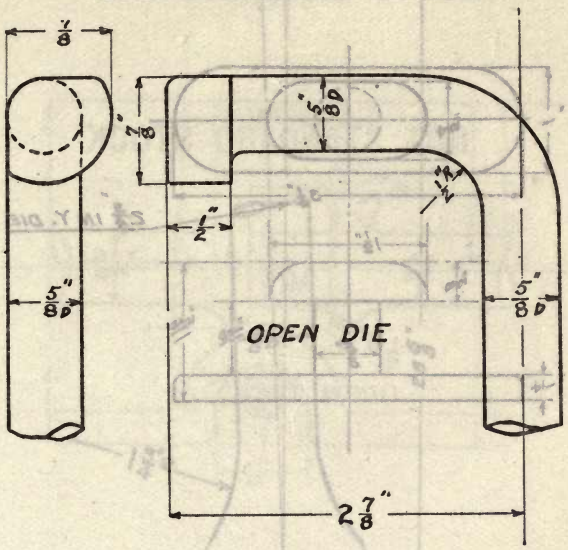

FITTINGS, TABLE, MESS

Leg, right, head of

Weight, ... lbs. **Die number, 1288-Y**
Former die number, (1)

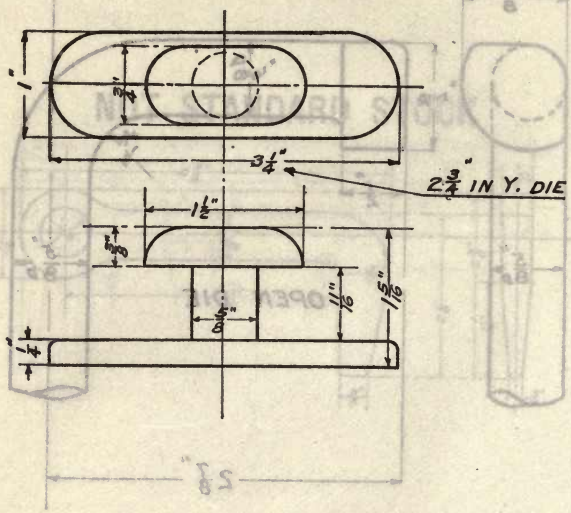

FITTINGS, BENCH AND TABLE, MESS

Button

Weight, lbs. Die number, 1289-YMN
Former die numbers, (415) (4-48) (4-33)

NOT STANDARD STOCK

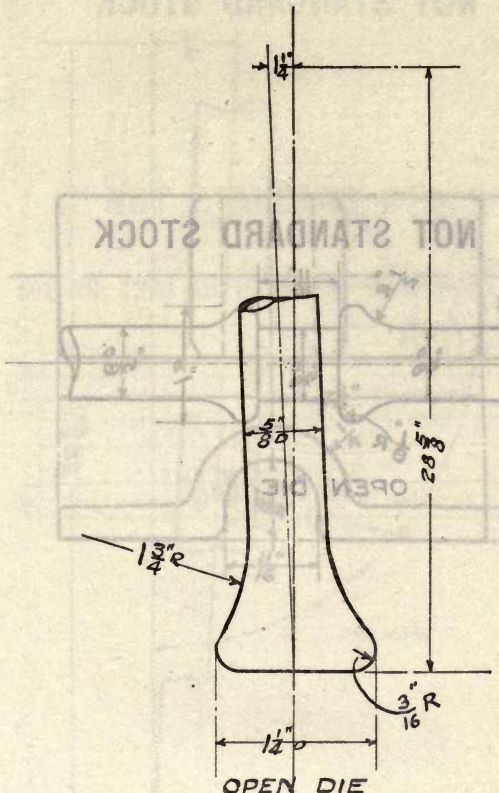

FITTINGS, BENCH AND TABLE, MESS

Leg, foot of

Weight, lbs. Die number, 1290-NY
Former die numbers, (4-30) (8-1)

NOT STANDARD STOCK

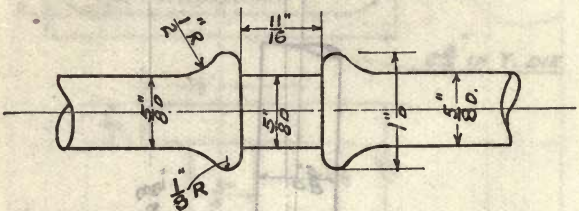

OPEN DIE

FITTINGS, BENCH AND TABLE, MESS

Braces, groove in

Weight, lbs. Die number, 1291-MYB
Former die numbers, (4-28) (8-2) (165)

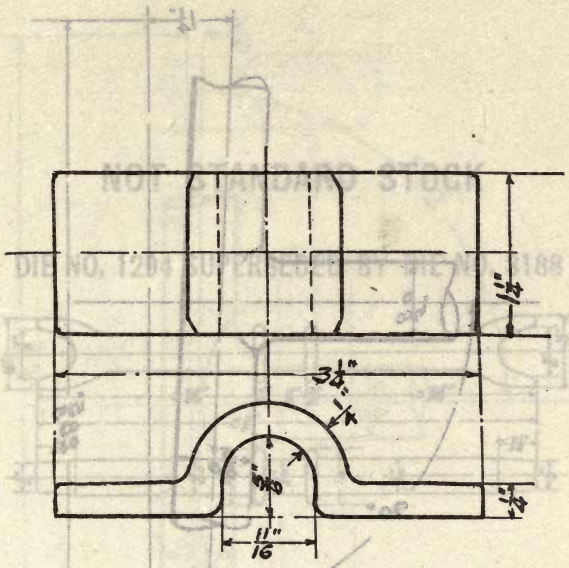

FITTINGS, BENCH AND TABLE, MESS

Bracket]

Weight (steel), 0.38 lb. Die number, 1292-NY
Former die numbers, (4-36) (7)

NOT STANDARD STOCK

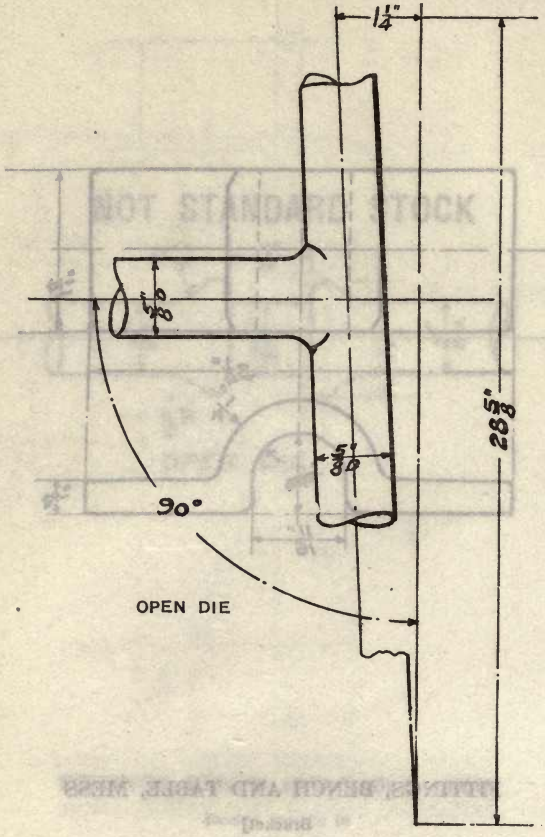

FITTINGS, TABLE, MESS

Brace, leg

Weight, **lbs.** **Die number, 1293-N**
Former die number, (4-27)

NOT STANDARD STOCK

DIE NO. 1294 SUPERSEDED BY DIE NO. 3188

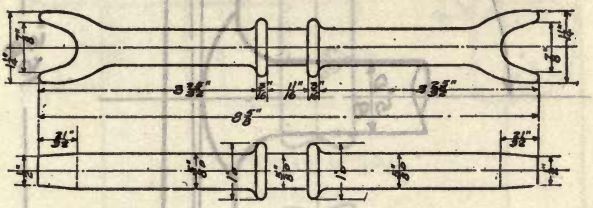

FITTINGS, BENCH, MESS

Brace, leg

Weight (steel), 1.0 lb. **Die number, 1294-N**
Former die number, (4-37)

NOT STANDARD STOCK

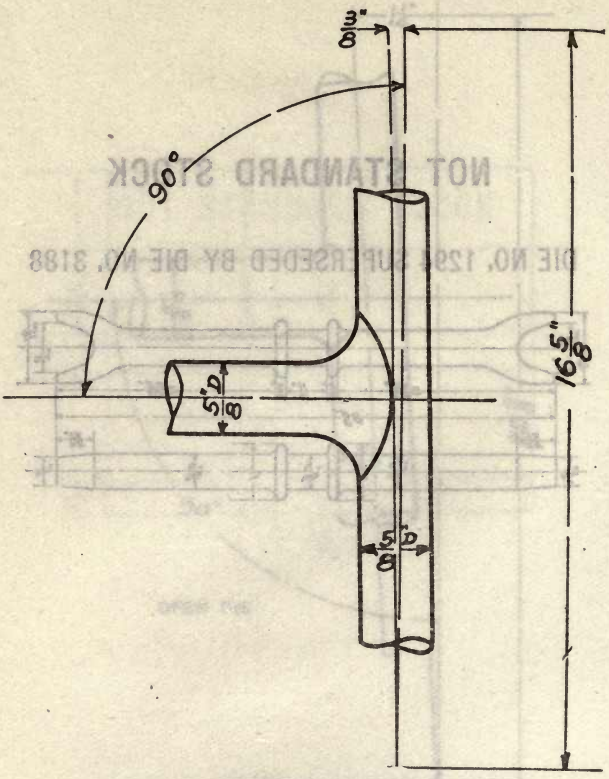

OPEN DIE

FITTINGS, BENCH, MESS

Brace, leg

Weight, lbs. **Die number, 1295-N**
Former die number, (4-26)

NOT STANDARD STOCK

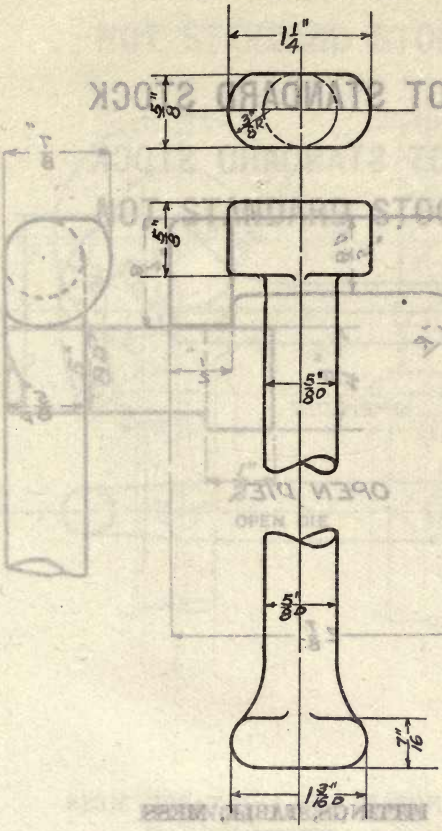

OPEN DIE

FITTINGS, TABLE, MESS

Leg

Weight, lbs. **Die number, 1296-B**
Former die number, (326)

NOT STANDARD STOCK

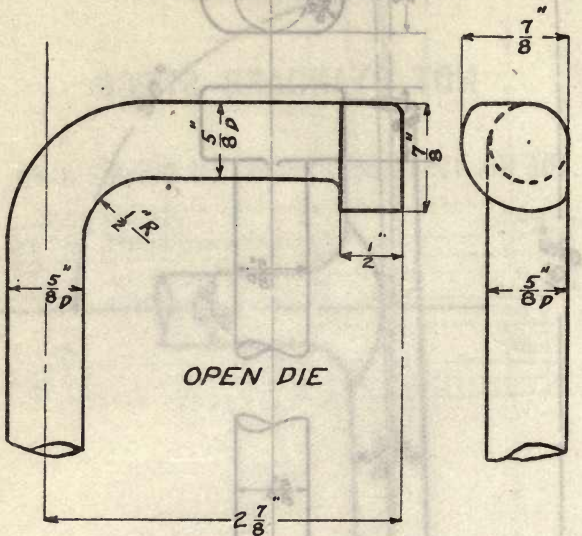

FITTINGS, TABLE, MESS

Leg, left, head of

Weight, **lbs.** **Die number, 1297-Y**
Former die number, (6)

NOT STANDARD STOCK

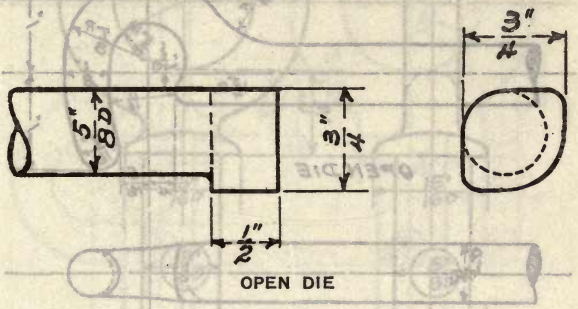

FITTINGS, TABLE, MESS

Leg, head of

Weight, lbs. **Die number, 1298-N**
Former die number, (4-29)

NOT STANDARD STOCK

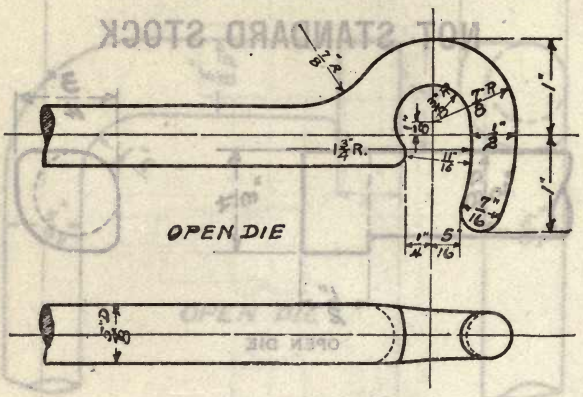

FITTINGS, BENCH AND TABLE, MESS

Hook, brace rod

Weight (steel), 0.50 lb. Die number, 1299-MNBY
Former die numbers, (4-32) (4-32) (162) (303)

NOT STANDARD STOCK

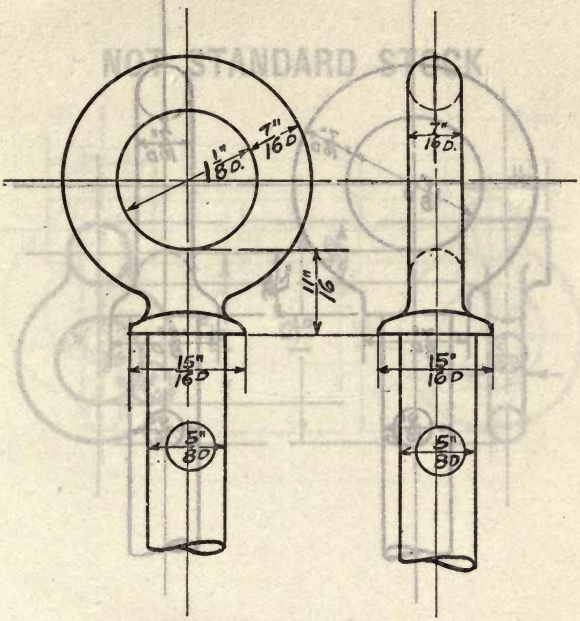

BOLT, EYE, COLLAR, 5/8″

Eye, 1 1/8″ Length, open die

Weight, lbs. **Die number, 1300-Y**
Former die number, (2)

NOT STANDARD STOCK

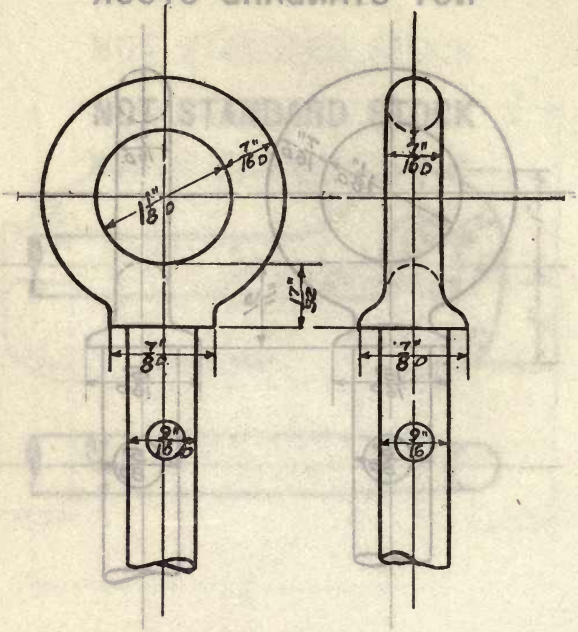

BOLT, EYE, COLLAR, 9/16″

Eye, 1 1/8″ Length, open die

Weight, lbs. **Die number, 1301-N**
Former die number, (5-124)

NOT STANDARD STOCK

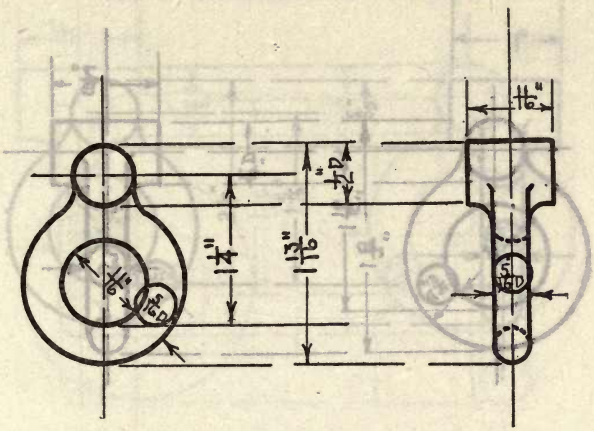

BECKET, 5/16″

Eye, 11/16′ Length, 1 1/4′

Weight, lbs. Die number, 1302-N
Former die number, (5-133)

NOT STANDARD STOCK

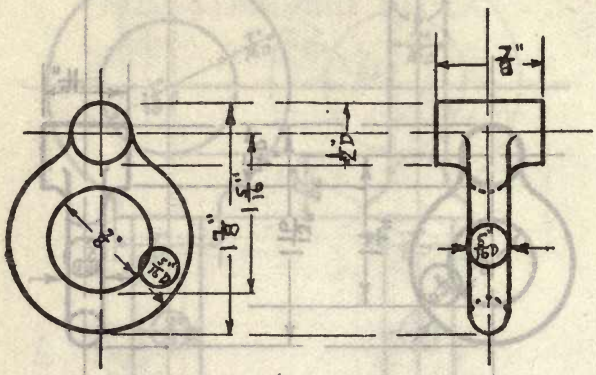

BECKET, 5/16″

Eye, 7/8″ Length, 1 5/16′

Weight, lbs. **Die number, 1303-YM**
Former die number, (532)

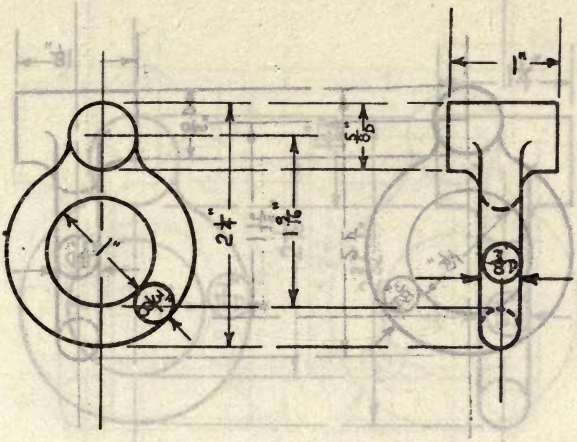

BECKET, 3/8″

Eye, 1″ Length, 1 9/16″

Weight, lbs. Die number, 1304-YM
Former die number, (533)

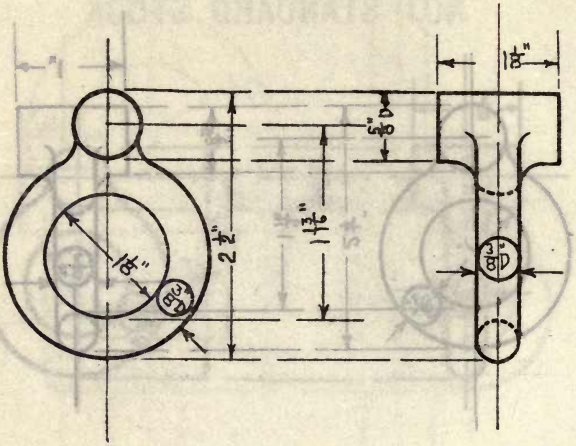

BECKET, 3/8″

Eye, 1 1/8″ Length, 1 13/16″

Weight, lbs. Die number, 1305-YM
Former die number, (534)

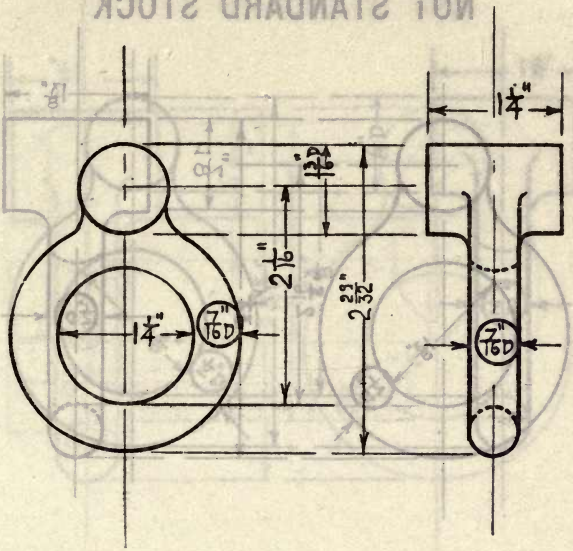

BECKET, 7/16″

Eye, 1 1/4″ Length, 2 1/16″

Weight, lbs. Die number, 1306-NM
Former die number, (5-137)

NOT STANDARD STOCK

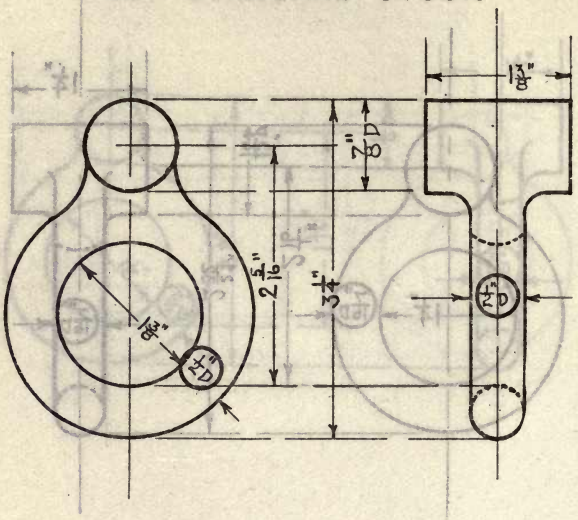

BECKET, 1/2″

Eye, 1 3/8″ Length, 2 5/16″

Weight, lbs. Die number, 1307-X
Former die number, (535)

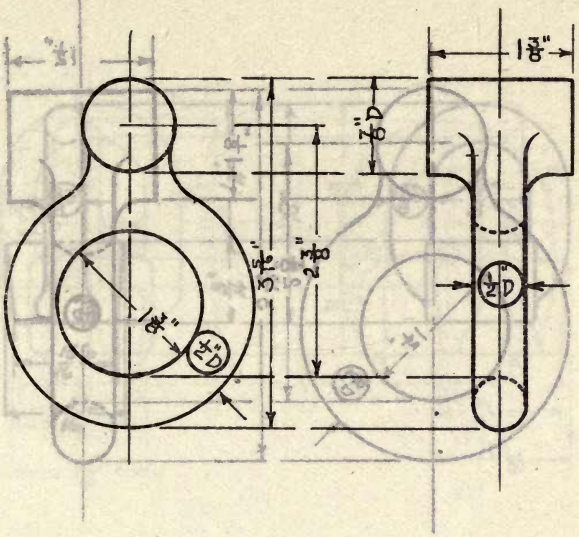

BECKET, 1/2″

Eye, 1 3/8″ Length, 2 3/8″

Weight, lbs. Die number, 1308-YM
Former die number, (536)

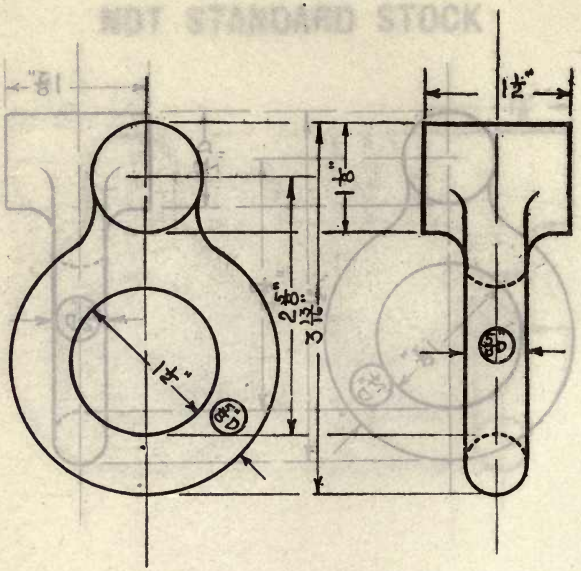

BECKET, 5/8″

Eye, 1 1/2″ Length, 2 5/8″

Weight, lbs. Die number, 1309-YM
Former die number, (537)

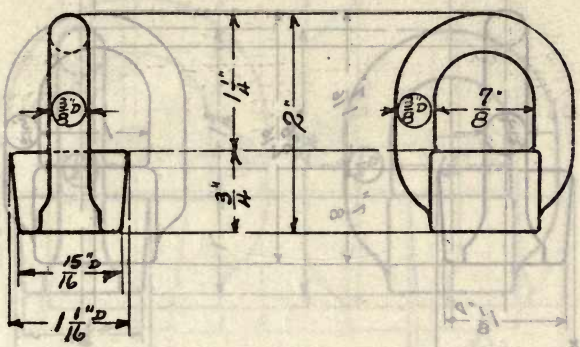

SWIVEL LINK, 3/8″

Weight, lbs. **Die number, 1310-NM**
Former die number, (5-76)

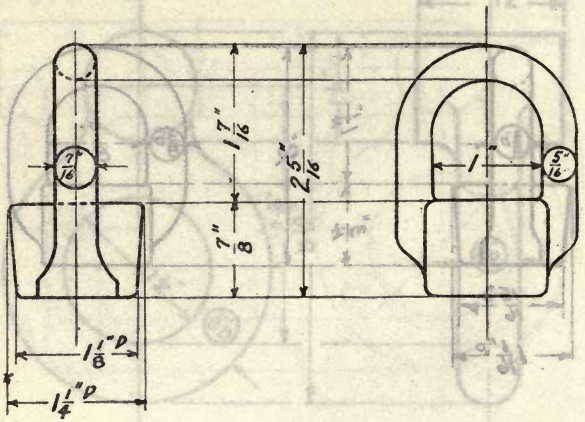

SWIVEL LINK, 7/16″ X 5/16″

Weight, lbs. **Die number, 1311-Y**
Former die number, (524)

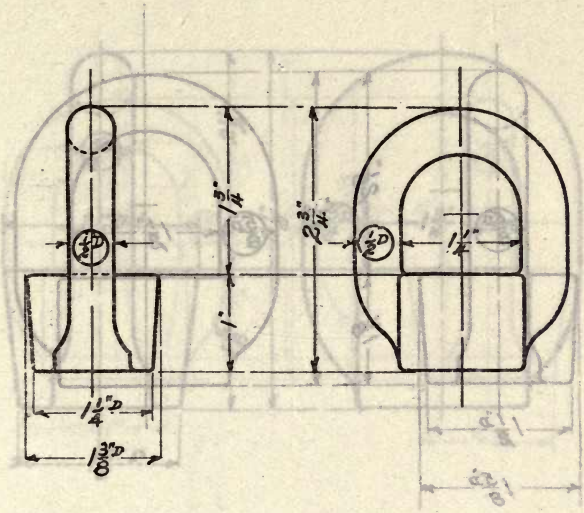

SWIVEL LINK, 1/2″

Weight, lbs. **Die number, 1312-YM**
Former die numbers, (517) (5-49)

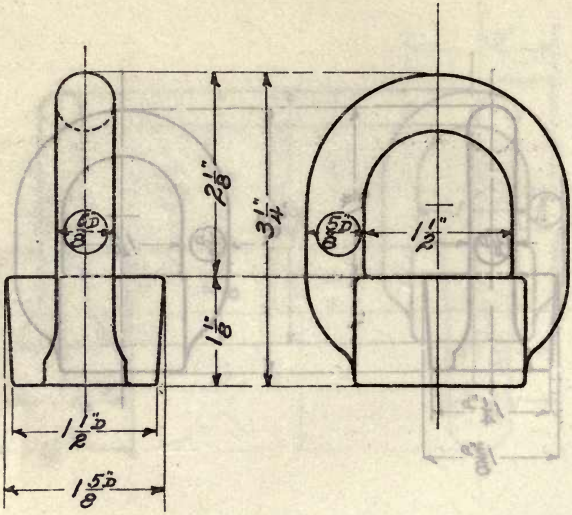

SWIVEL LINK, 5/8″

Weight, lbs. Die number, 1313-YM
Former die numbers, (518) (5-50)

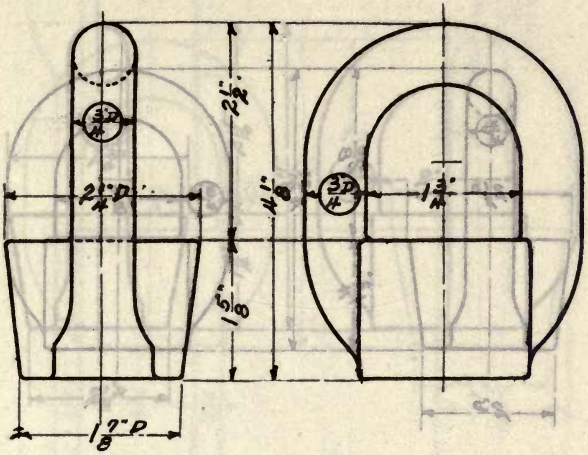

SWIVEL LINK, 3/4"

Weight, lbs. Die number, 1314-YM
Former die numbers, (519) (5-52)

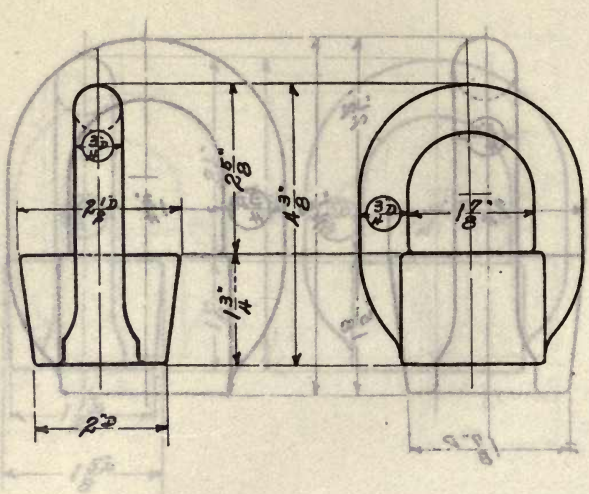

SWIVEL LINK, 3/4″

Weight, lbs. Die number, 1315-Y
Former die number, (520)

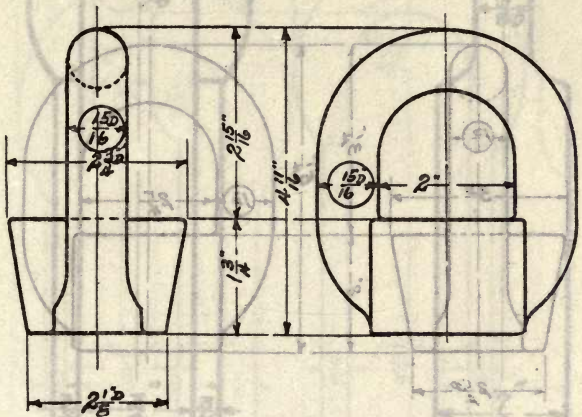

SWIVEL LINK, 15/16″

Weight, -lbs. Die number, 1316-YM
Former die number, (521)

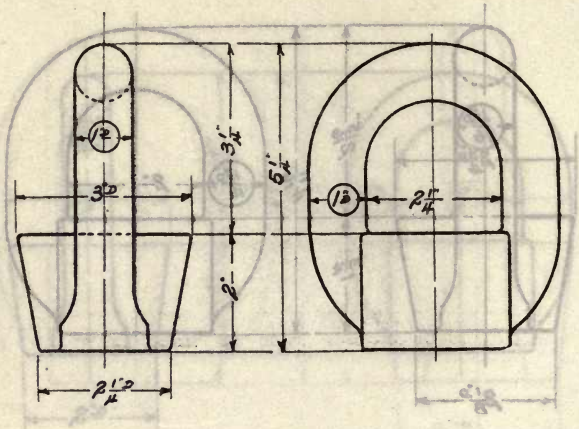

SWIVEL LINK, 1"

Weight, **lbs.** **Die number, 1317-NM**
Former die number, (5-55)

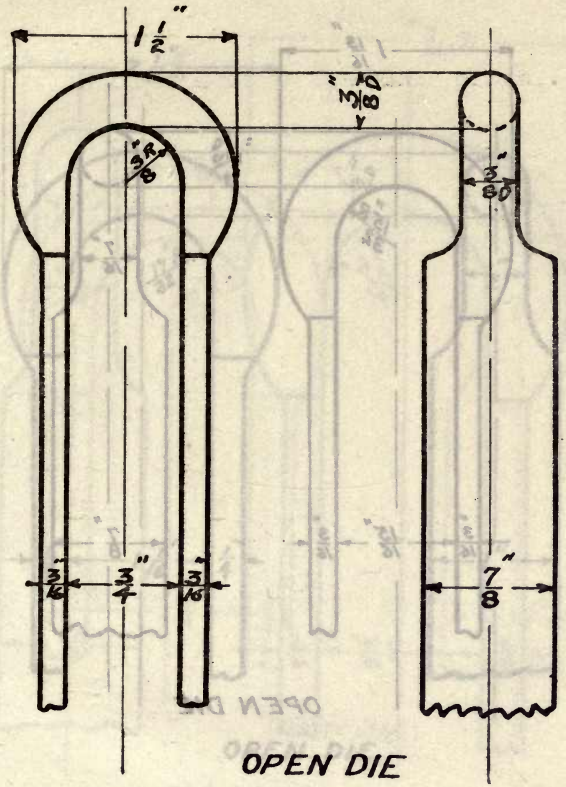

STRAP, BLOCK, SINGLE, 4″

Weight, lbs. Die number, 1318-PMNY
Former die numbers, (101) (5-1) (5-1) (221)

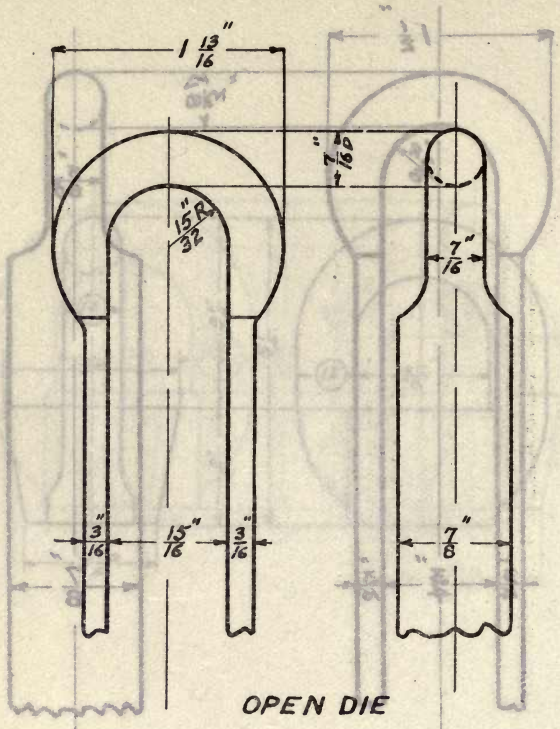

STRAP, BLOCK, SINGLE 4″

4″ single metal block

Weight, lbs. Die number, 1319-PMNY
Former die numbers, (102) (5-4) (5-4) (222)

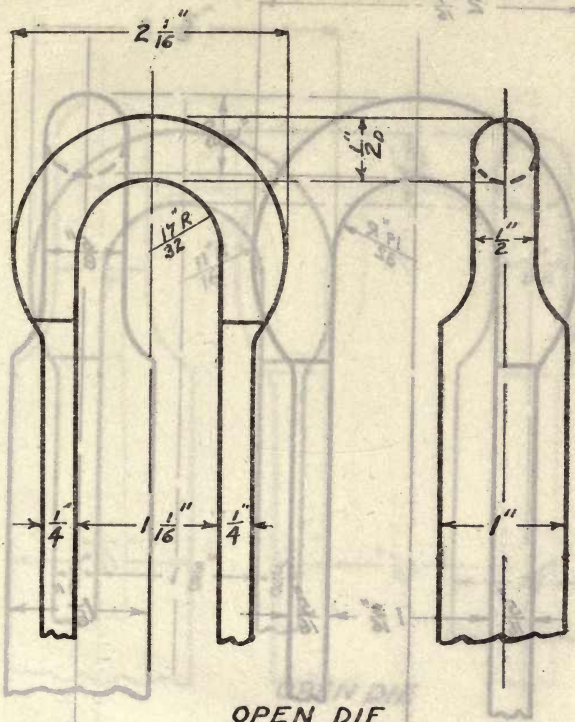

STRAP, BLOCK, SINGLE, 5″

5″ single metal block

Weight, lbs. Die number, 1320-PMNY
Former die numbers, (103) (5-7) (5-7) (223)

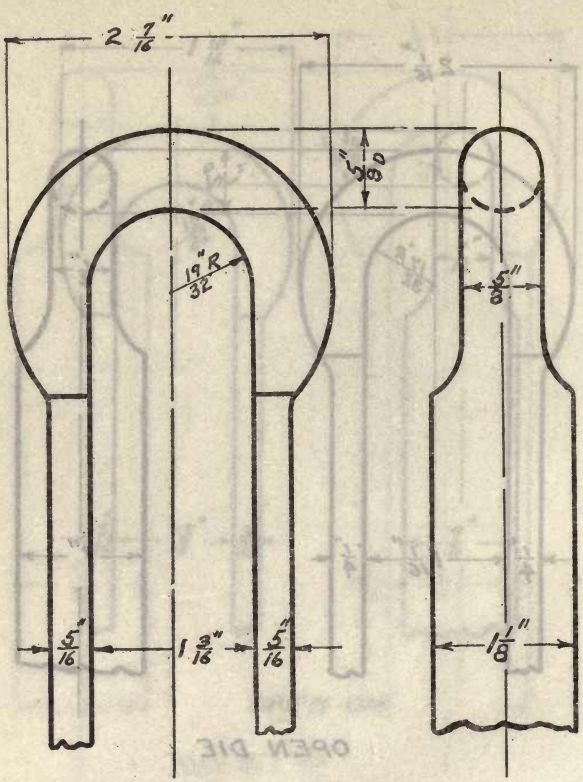

OPEN DIE

STRAP, BLOCK, SINGLE, 7″

Weight, lbs. Die number, 1321-PMNY
Former die numbers, (104) (5-10) (5-10) (224)

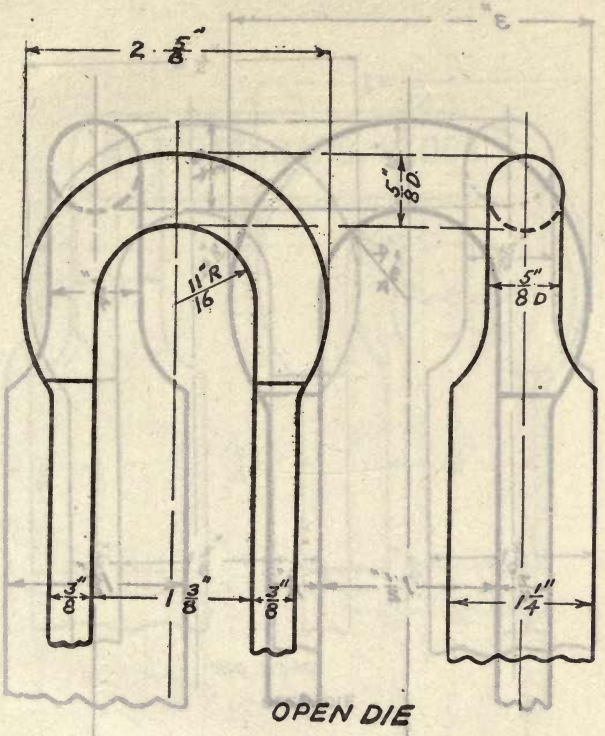

STRAP, BLOCK, SINGLE, 7″

7″ single metal block

Weight, lbs. **Die number, 1322-PMNY**
Former die numbers, (105) (5-13) (5-13) (225)

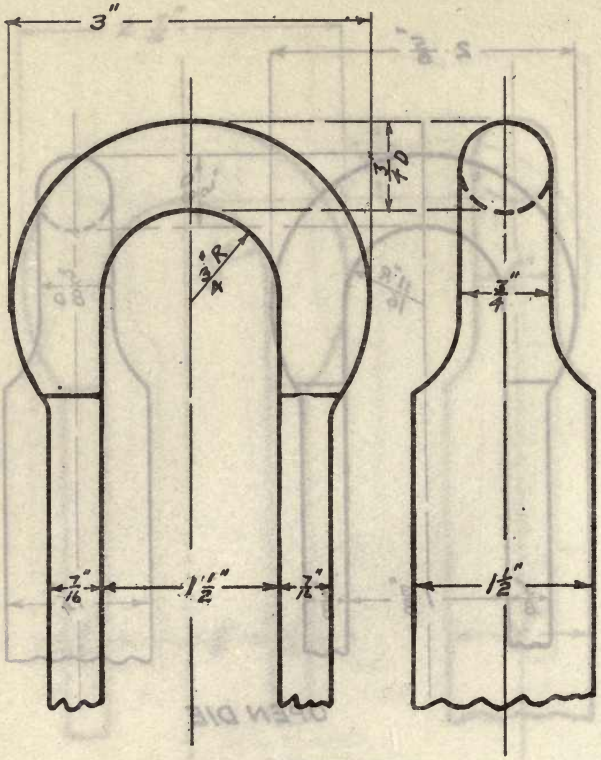

OPEN DIE

STRAP, BLOCK, SINGLE, 8″

8″ single metal block

Weight, lbs. Die number, 1323-PMNY
Former die numbers, (106) (5-20) (5-20) (226) -

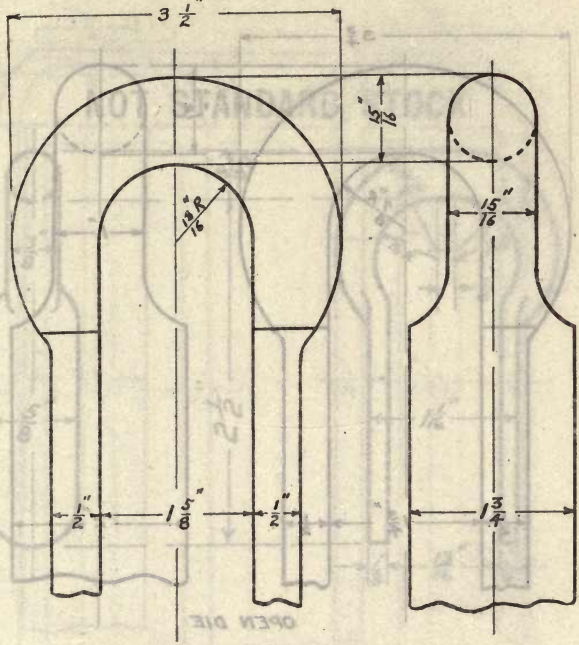

OPEN DIE

STRAP, BLOCK, SINGLE, 10″

10″ single metal block

Weight, lbs. Die number, 1324-PMNY
Former die numbers, (107) (5-21) (5-21) (227)

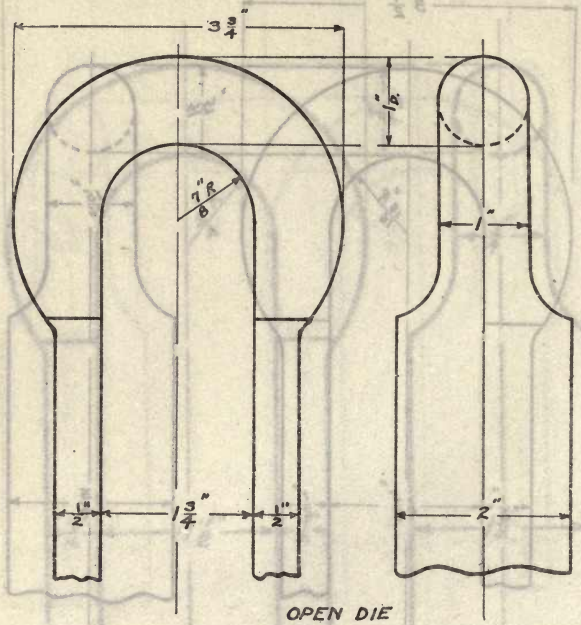

STRAP, BLOCK, SINGLE, 12″

12″ single metal block

Weight, lbs. **Die number, 1325-PMNY**
Former die numbers, (108) (5-27) (5-27) (228)

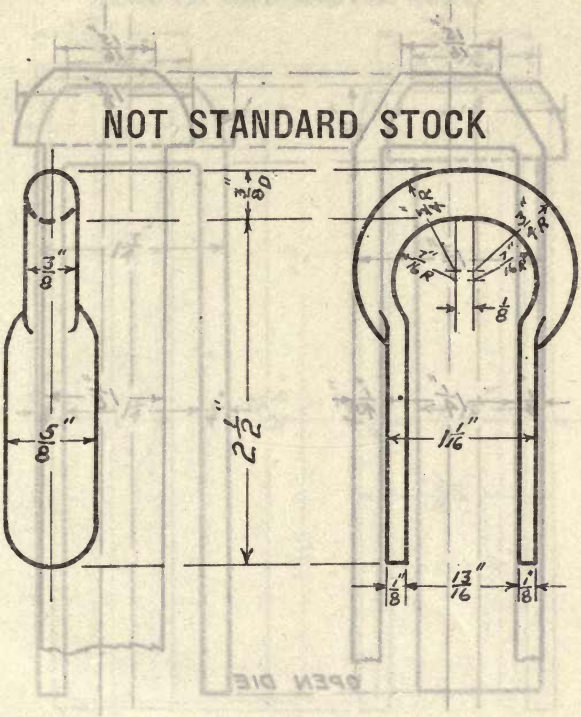

STRAP, BLOCK, METAL, SINGLE, 3″

Weight (steel), 0.16 lb. **Die number, 1326-P**
Former die number, (109)

NOT STANDARD STOCK

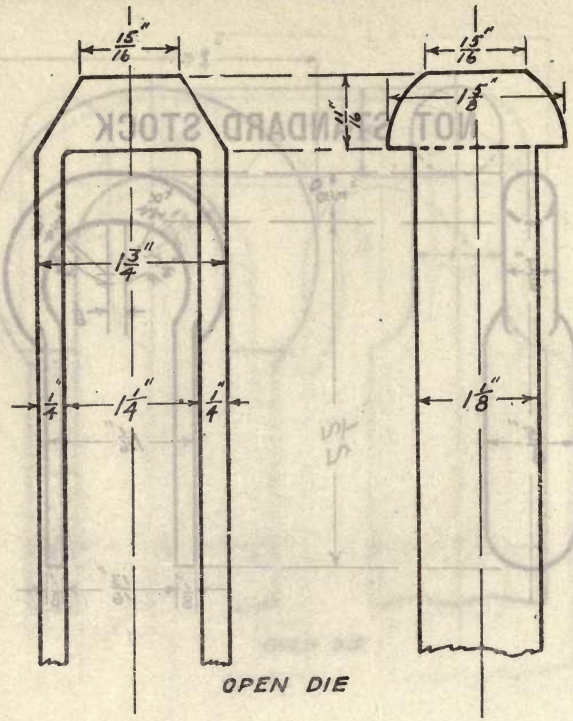

STRAP, BLOCK, METAL, SINGLE, 6″

For ammunition whip

Weight, lbs. **Die number, 1327-Y**
Former die number, (341)

NOT STANDARD STOCK

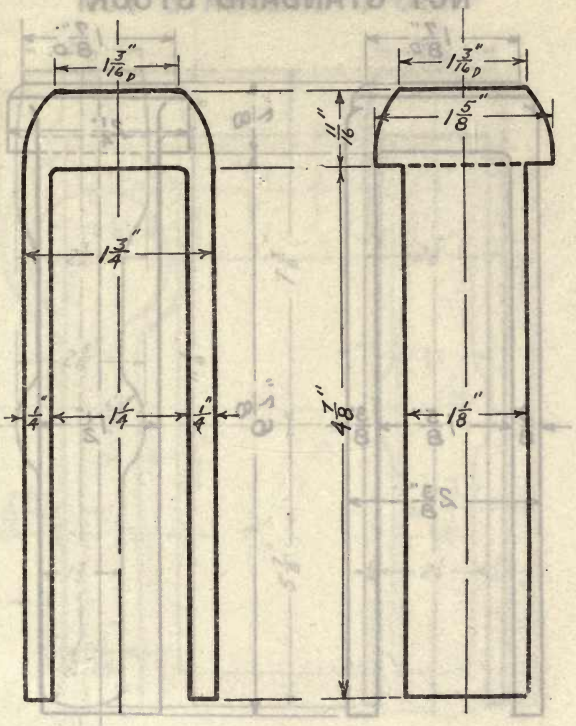

STRAP, BLOCK, METAL, SINGLE, 6″

For ammunition whip

Weight, lbs. Die number, 1328-N
Former die number, (5-122)

NOT STANDARD STOCK

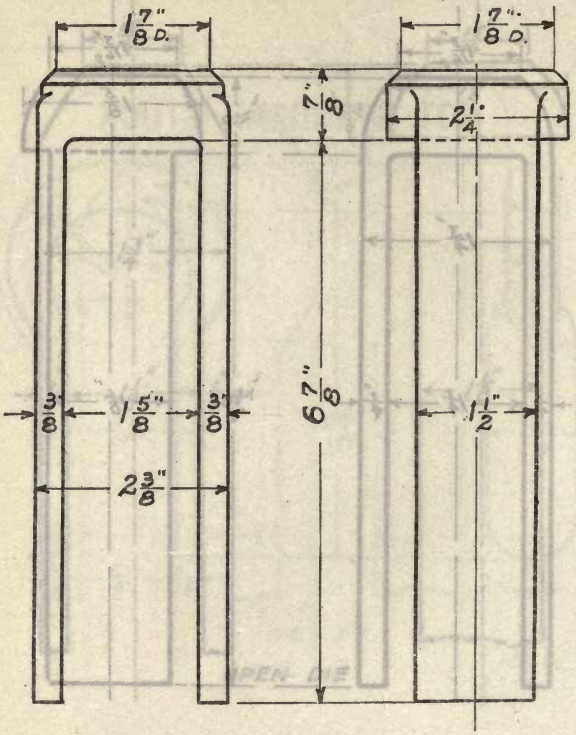

STRAP, BLOCK, WOOD, SINGLE, 8″

Weight, lbs. **Die number, 1329-P**
Former die number, (407)

NOT STANDARD STOCK

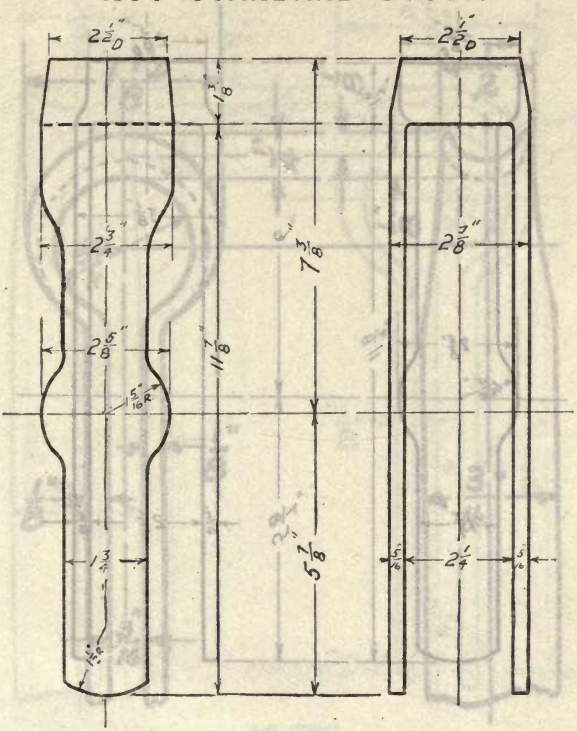

STRAP, BLOCK, METAL, SINGLE, COALING, 12″

Weight (steel), lbs. Die number, 1330-N
Former die number, (5-144)

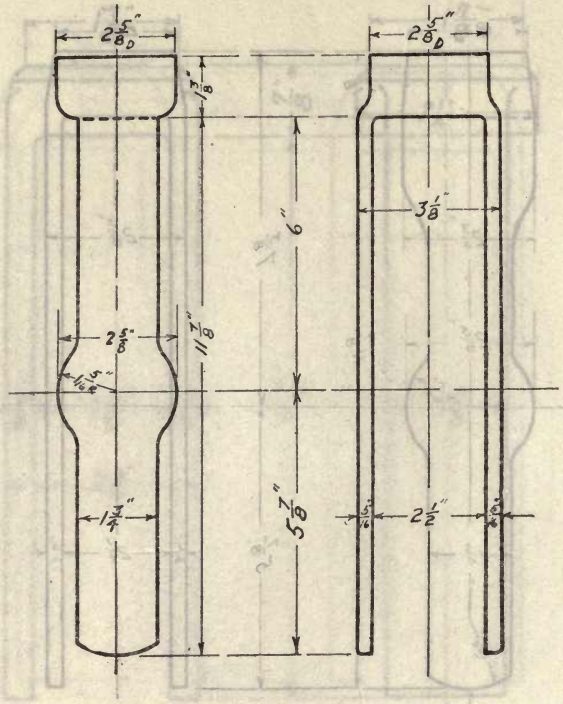

STRAP, BLOCK, METAL, SINGLE, COALING, 12″

Weight (steel), lbs. **Die number, 1331-Y**
Former die number, (480)

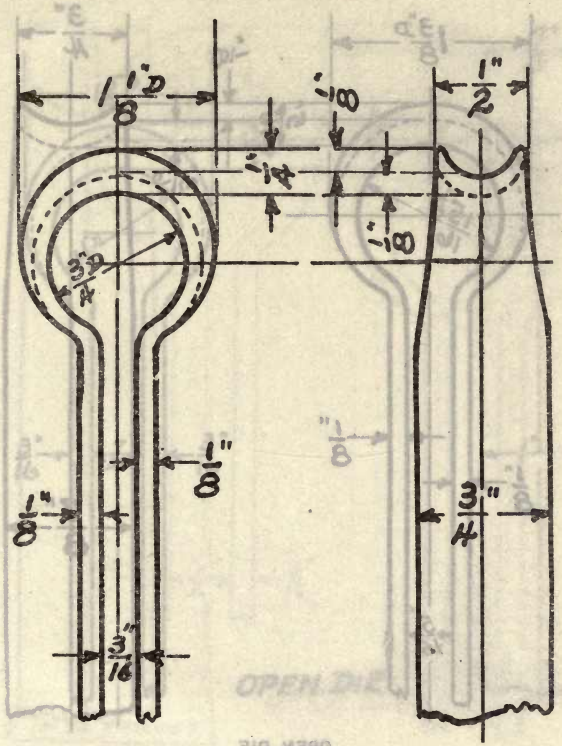

OPEN DIE

STRAP, BLOCK, DOUBLE, INNER, 4″

Weight, lbs. **Die number, 1332-NMYP**
Former die numbers, (5-2) (5-2) (229) (131)

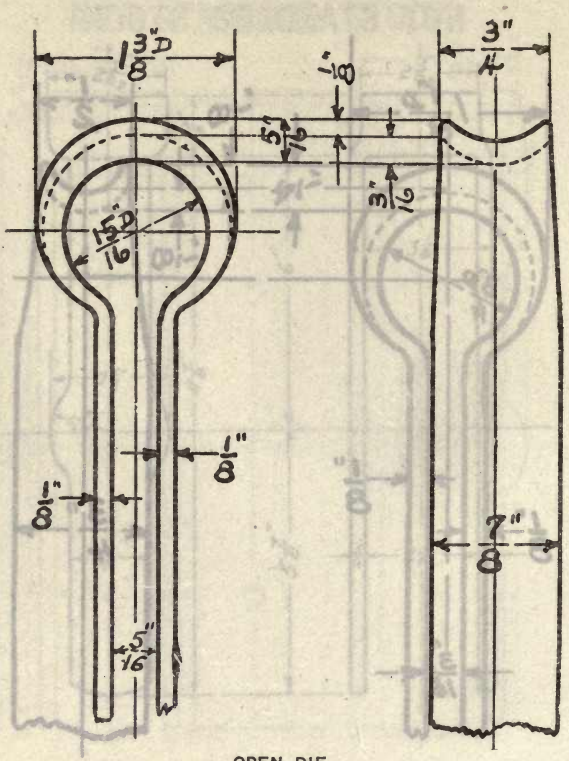

OPEN DIE

STRAP, BLOCK, DOUBLE, INNER, 4″

4″ double metal block

Weight, lbs. Die number, 1333-NMYP
Former die numbers, (5-5) (5-5) (230) (132)

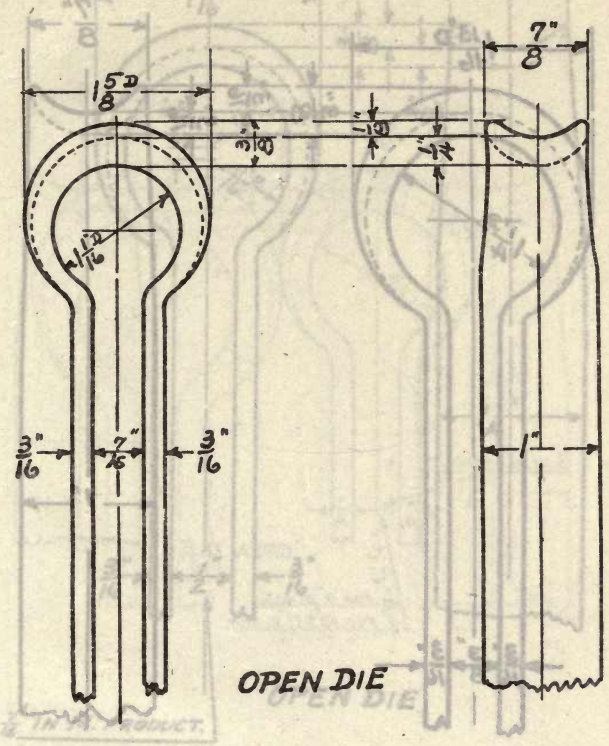

STRAP, BLOCK, DOUBLE, INNER, 5″

5″ double metal block

Weight, lbs. Die number, 1334-NMYP
Former die numbers, (5-8) (5-8) (231) (133)

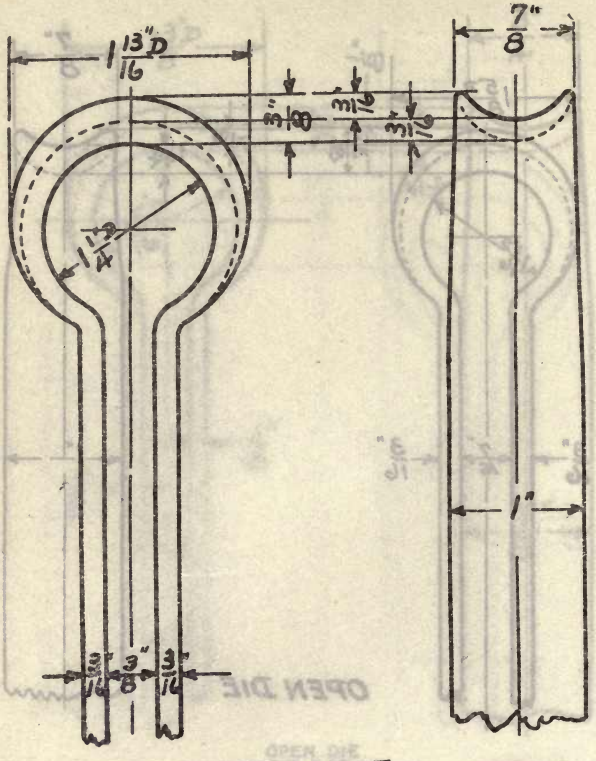

OPEN DIE

STRAP, BLOCK, DOUBLE, INNER, 6″

6″ double metal block

Weight, lbs. Die number, 1335-NMYP
Former die numbers, (5-11) (5-11) (232) (134)

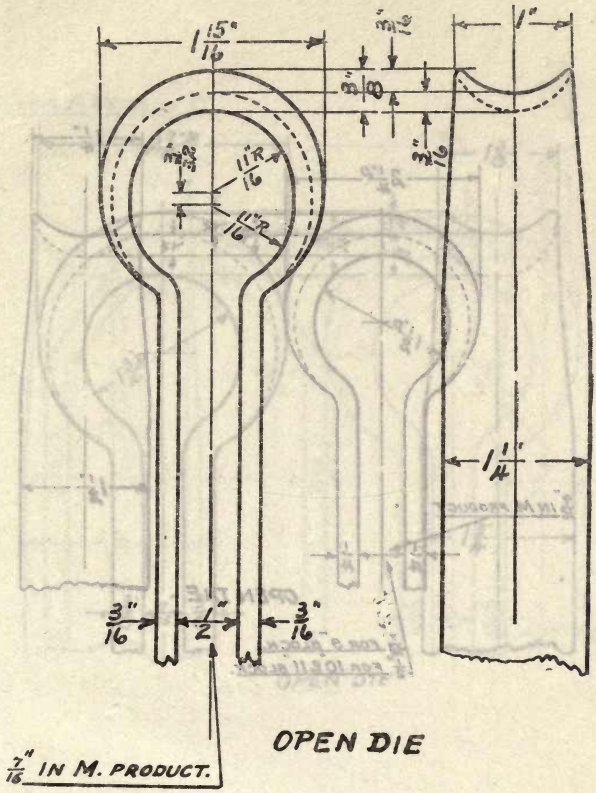

STRAP, BLOCK, DOUBLE, INNER, 7″

7″ double metal block

Weight, lbs. Die number, 1336-NMYP
Former die numbers, (5-14) (5-14) (233) (135)

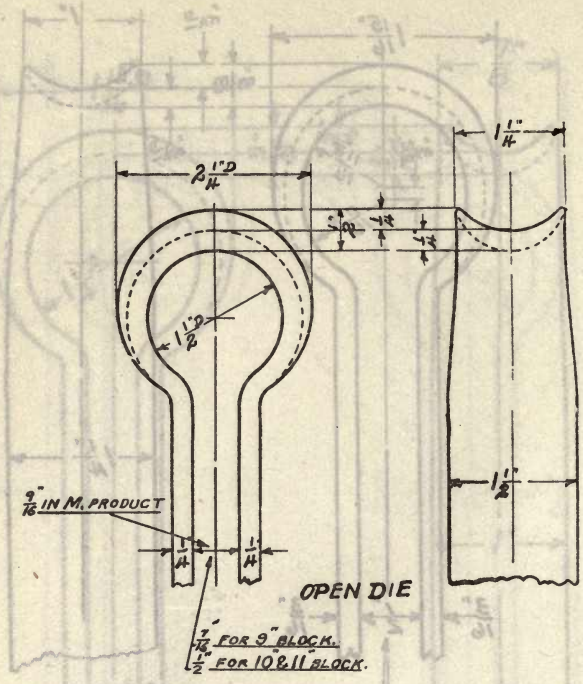

STRAP, BLOCK, DOUBLE, INNER, 8″

8″ double metal block

Weight, lbs. **Die number, 1337-NMY**
Former die numbers, (5-17) (5-17) (234)

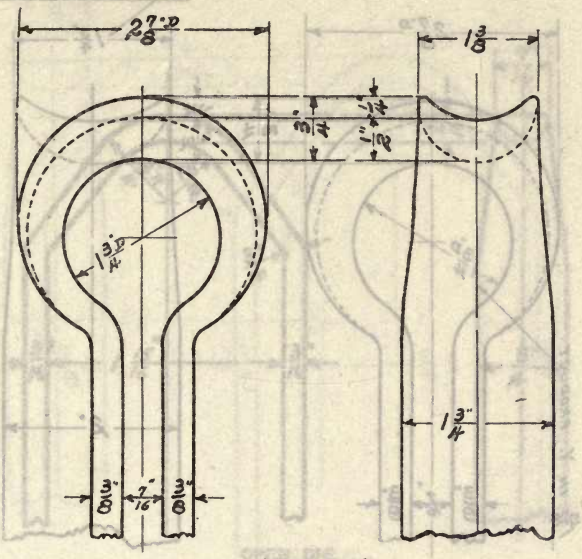

OPEN DIE

STRAP, BLOCK, DOUBLE, INNER, 10″

10″ double metal block

Weight, lbs. Die number, 1338-NMYP
Former die numbers, (5-22) (5-22) (235) (138)

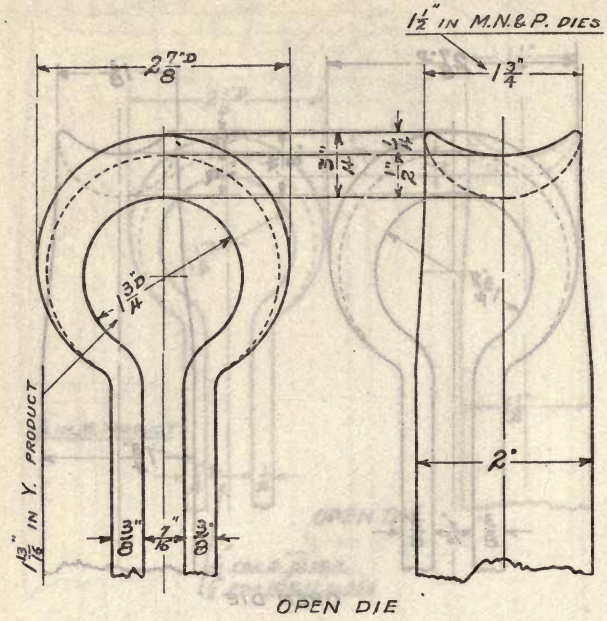

STRAP, BLOCK, DOUBLE, INNER, 12″ AND 14″

12″ and 14″ double metal blocks

Weight, lbs. Die number, 1339-NMYP
Former die numbers, (5-25) (5-25) (236) (139)

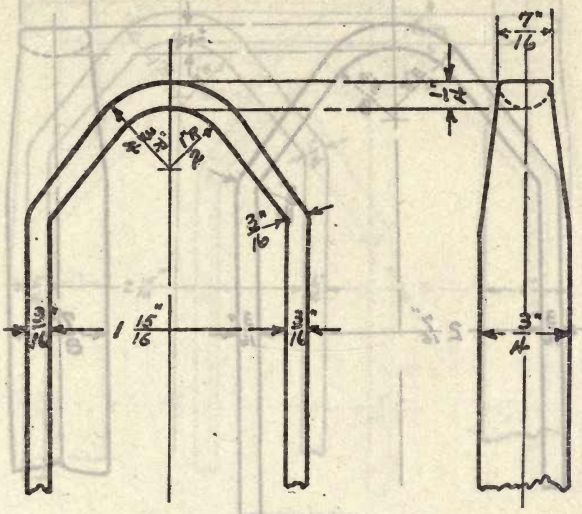

OPEN DIE

STRAP, BLOCK, DOUBLE, OUTER, 4″

Weight, lbs. **Die number, 1340-NMYP**
Former die numbers, (5-3) (5-3) (213) (116)

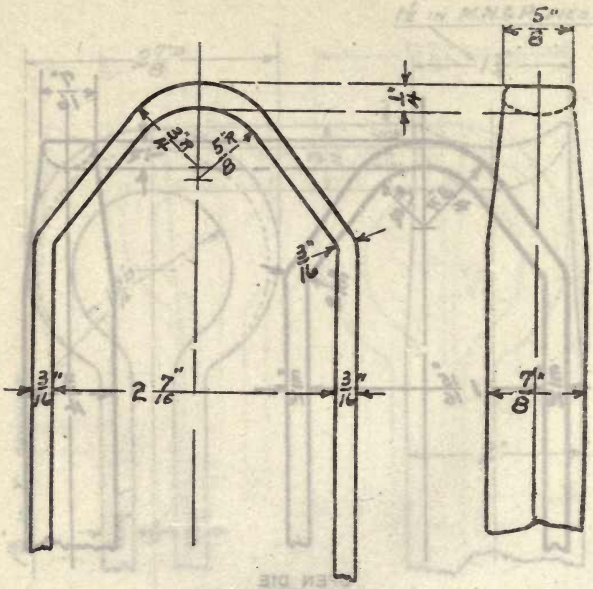

OPEN DIE

STRAP, BLOCK, DOUBLE, OUTER, 4″

4″ double metal block

Weight, lbs. **Die number, 1341-NMYP**
Former die numbers, (5-6) (5-6) (214) (117)

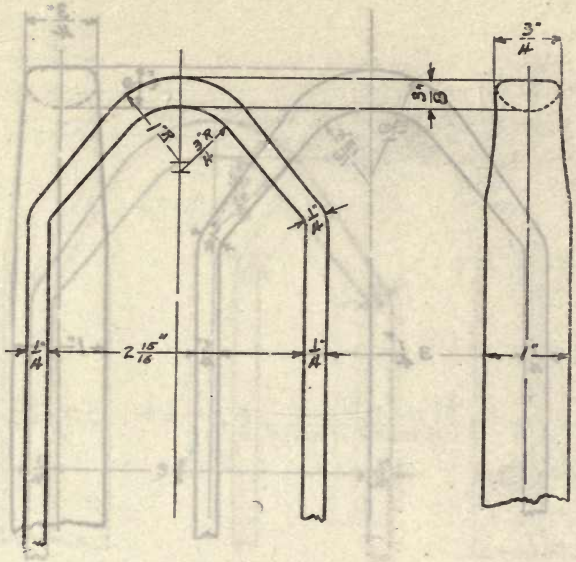

OPEN DIE

STRAP, BLOCK, DOUBLE, OUTER, 5″

5″ double metal block

Weight, lbs. Die number, 1342-NMYP
Former die numbers, (5-9) (5-9) (215) (118)

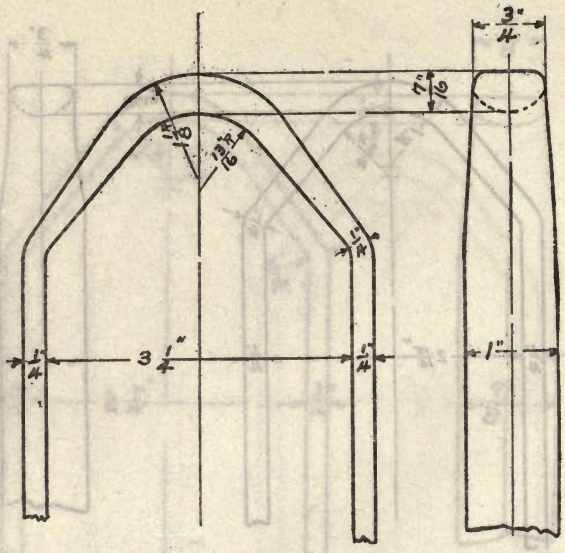

OPEN DIE

STRAP, BLOCK, DOUBLE, OUTER, 6″

6″ double metal block

Weight, lbs. Die number, 1343-NMYP
Former die numbers, (5-12) (5-12) (216) (119)

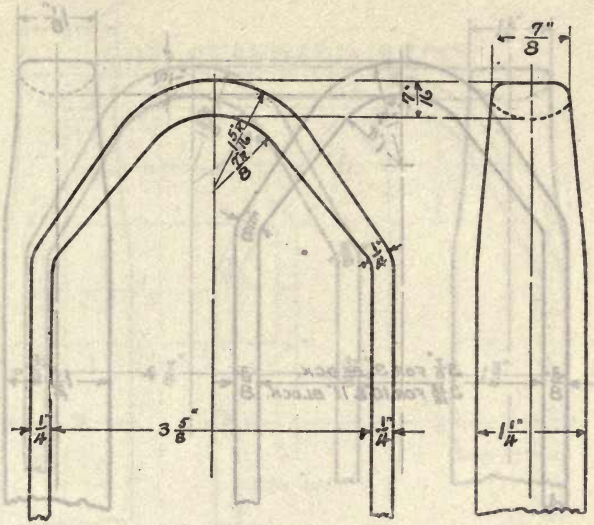

OPEN DIE

STRAP, BLOCK, DOUBLE, OUTER, 7″

7″ double metal block

Weight, lbs. Die number, 1344-NMYP
Former die numbers, (5-15) (5-15) (217) (120)

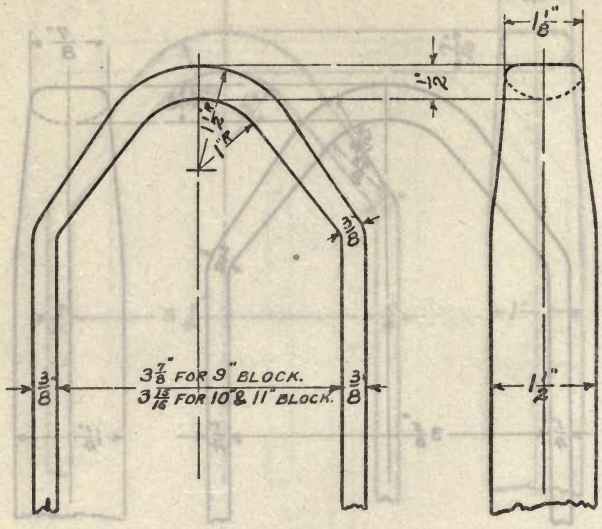

OPEN DIE

STRAP, BLOCK, DOUBLE, OUTER, 8″

8″ double metal block

Weight, lbs. Die number, 1345-NMYP
Former die numbers, (5-18) (5-18) (121) (218)

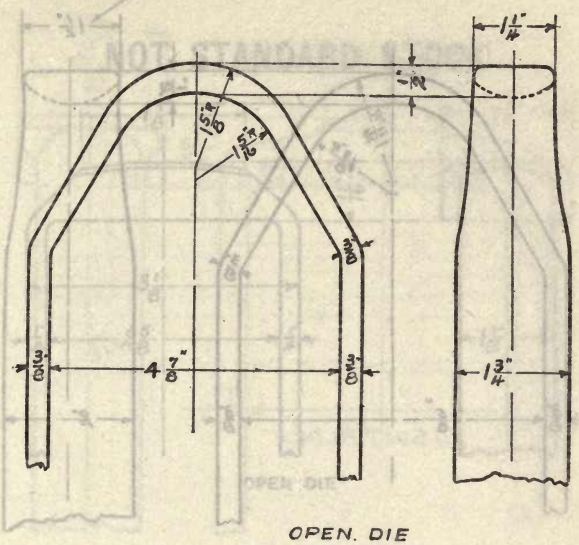

OPEN. DIE

STRAP, BLOCK, DOUBLE, OUTER, 10″

10″ double metal block

Weight, lbs. Die number, 1346-NMYP
Former die numbers, (5-23) (5-23) (219) (122)

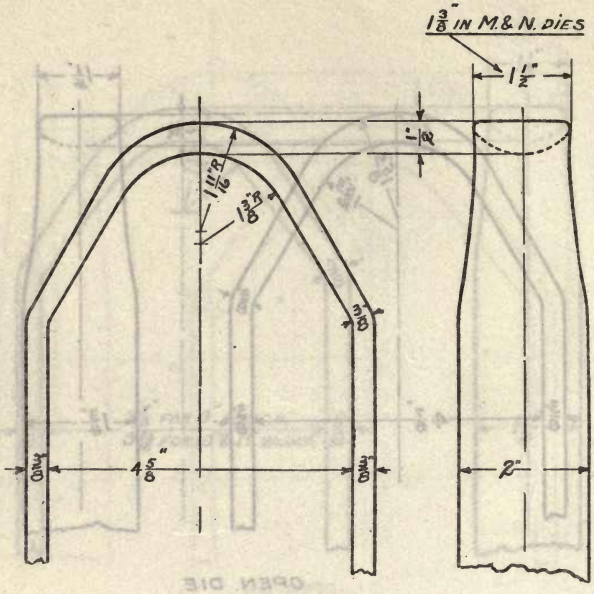

OPEN DIE

STRAP, BLOCK, DOUBLE, OUTER, 12″ AND 14″

12″ and 14″ double metal blocks

Weight, lbs. Die number, 1347-NMYP
Former die numbers, (5-26) (5-26) (220) (123)

NOT STANDARD STOCK

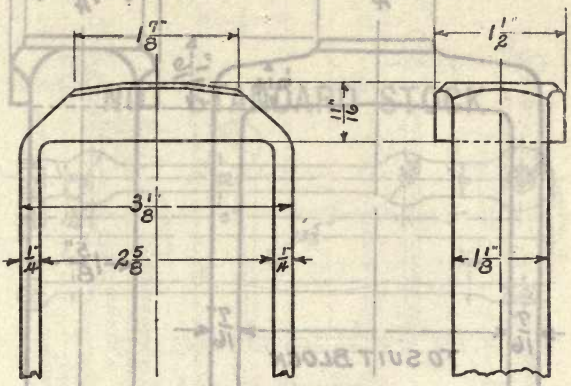

OPEN DIE

STRAP, BLOCK, METAL, DOUBLE, OUTER, 6″

For ammunition whip

Weight (steel), lbs. Die number, 1348-YN
Former die numbers, (340) (5-123)

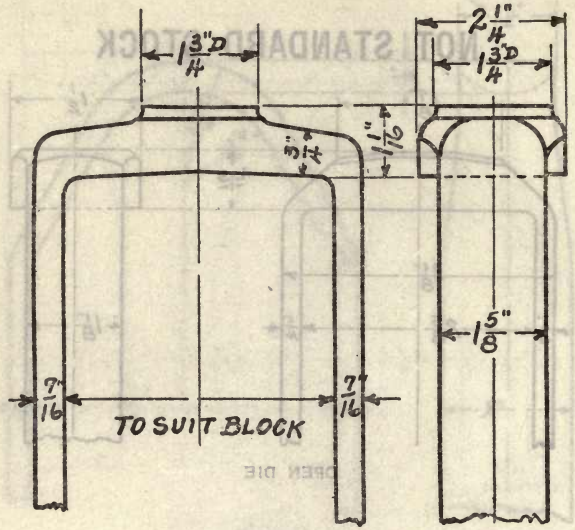

OPEN DIE

STRAP, BLOCK, WOOD, DOUBLE, OUTER, 9″ AND 10″

Weight, lbs. Die number, 1349-PM
Former die number, (406)

NOT STANDARD STOCK

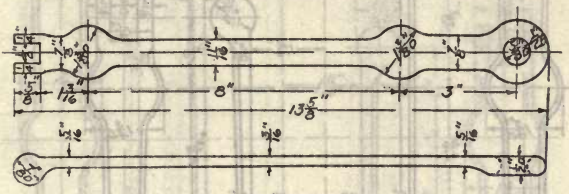

STRAP, BLOCK, SNATCH, 5″

Weight, lbs. **Die number, 1350-B**
Former die number, (192)

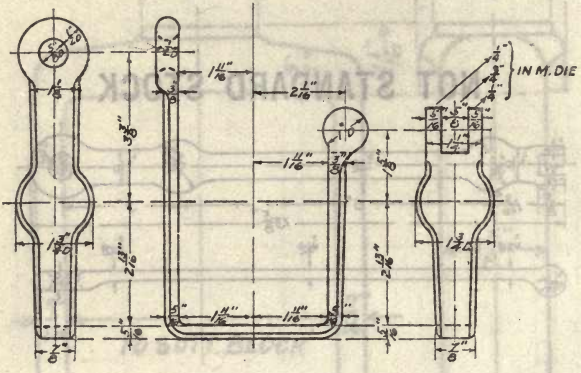

STRAP, BLOCK, WOOD, SNATCH, 6″

Weight, **lbs.** **Die number, 1351-MPB**
Former die numbers, (5-82) (161) (77 and 81)

NOT STANDARD STOCK

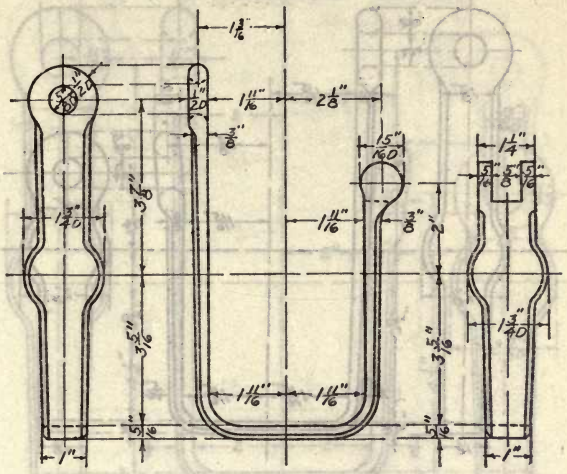

STRAP, BLOCK, WOOD, SNATCH, 7″

Weight (steel), 2.0 lbs. **Die number, 1352-YB**
Former die numbers, (241) (59)

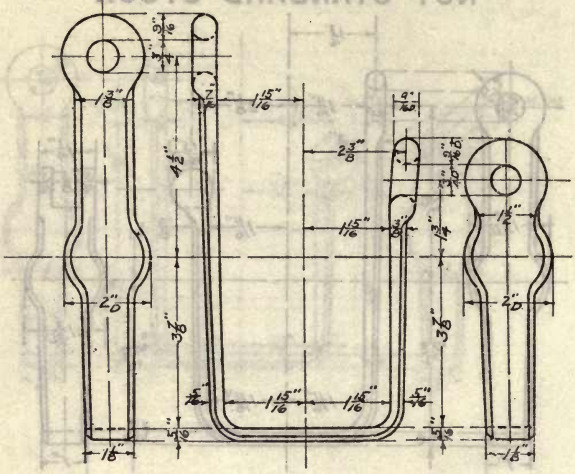

STRAP, BLOCK, WOOD, SNATCH, 8″

Weight, lbs. Die number, 1353-MPB
Former die numbers, (5-90) (163) (73 and 74)

NOT STANDARD STOCK

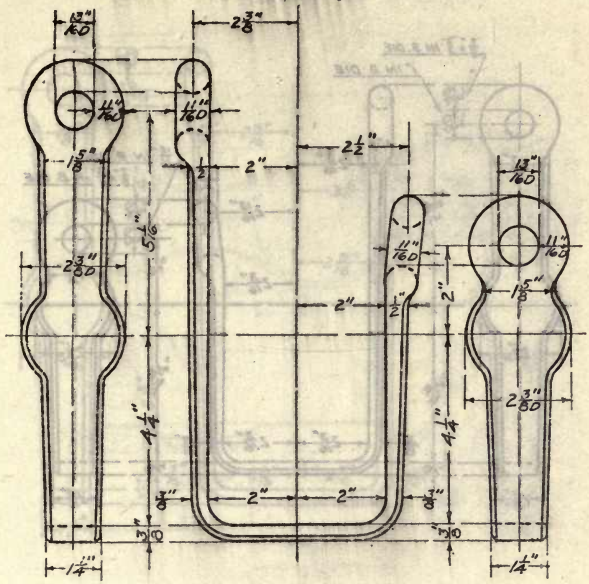

STRAP, BLOCK, WOOD, SNATCH, 9″

Weight, lbs. Die number, 1354-YB
Former die numbers, (243) (182 and 185)

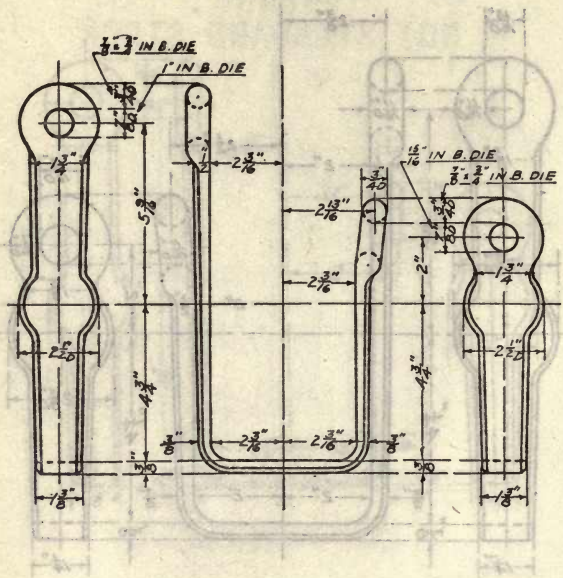

STRAP, BLOCK, WOOD, SNATCH, 10″

Weight, lbs. **Die number, 1355-MB**
Former die numbers, (5-98) (176 and 180)

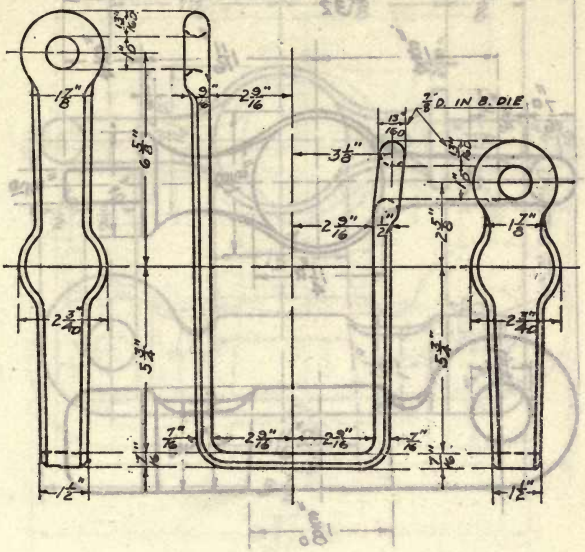

STRAP, BLOCK, WOOD, SNATCH, 12″

Weight, lbs. Die number, 1356-MB
Former die numbers, (5-106) (119 and 149)

NOT STANDARD STOCK

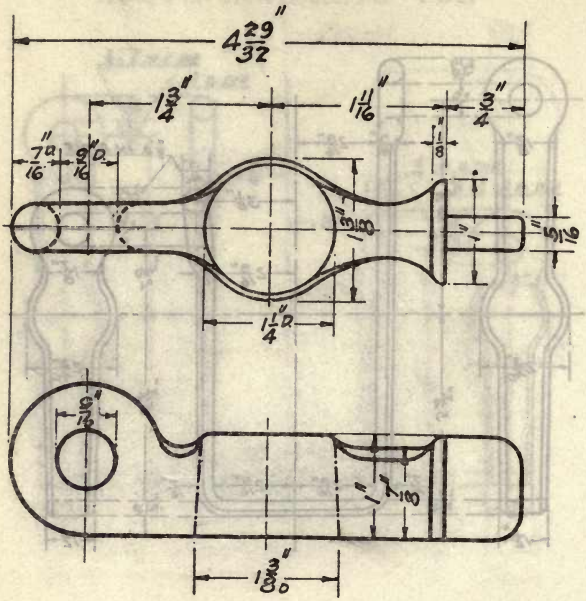

CROSS-HEAD, BLOCK, WOOD, SNATCH, 5″

Weight, **lbs.** **Die number, 1357-B**
Former die number, (63)

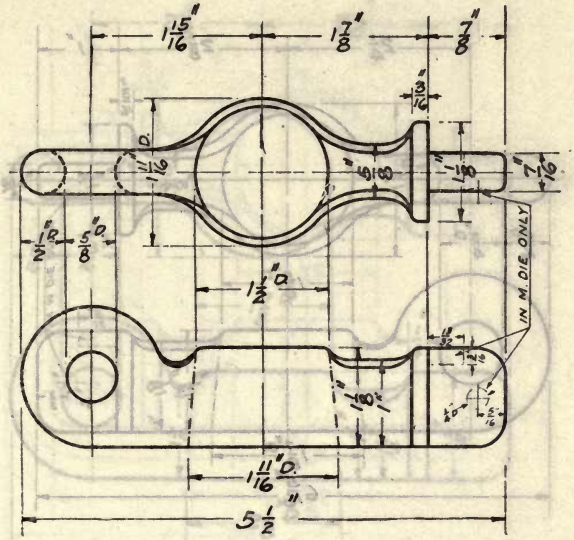

CROSS-HEAD, BLOCK, WOOD, SNATCH, 6″ AND 7″

Weight (steel), 1.3 lbs. **Die number, 1358-MPB**
Former die numbers, (5-83) (204) (172)

NOT STANDARD STOCK

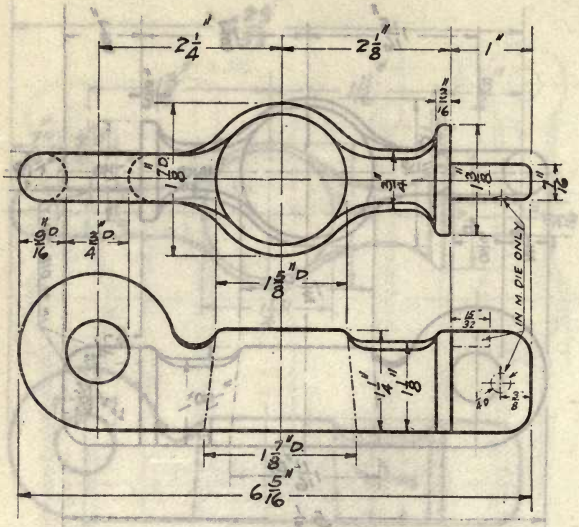

CROSS-HEAD, BLOCK, WOOD, SNATCH, 8″

Weight (steel), 1.6 lbs. **Die number, 1359-MPB**
Former die numbers, (5-91) (206) (66)

NOT STANDARD STOCK

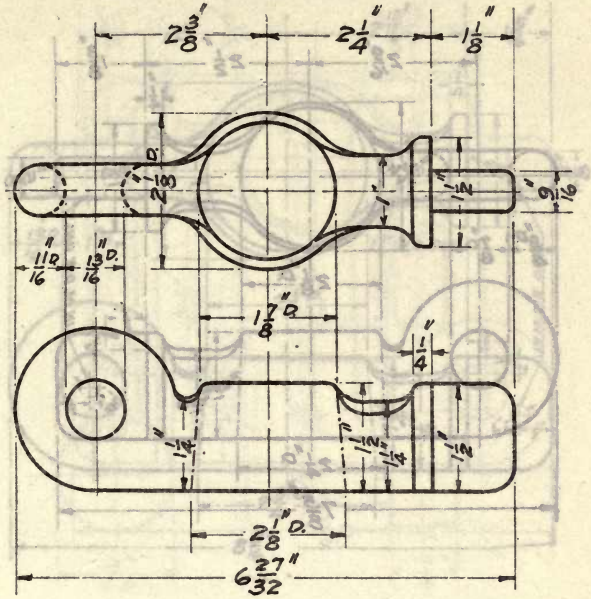

CROSS-HEAD, BLOCK, WOOD, SNATCH, 9″

Weight (steel), 2.4 lbs. **Die number, 1360-YB**
Former die numbers, (67) (72)

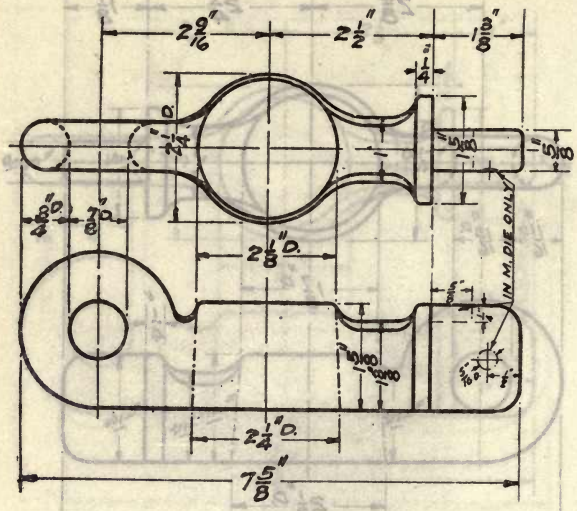

CROSS-HEAD, BLOCK, WOOD, SNATCH, 10″

Weight (steel), 3.1 lbs. **Die number, 1361-MB**
Former die numbers, (5-99) (70)

NOT STANDARD STOCK

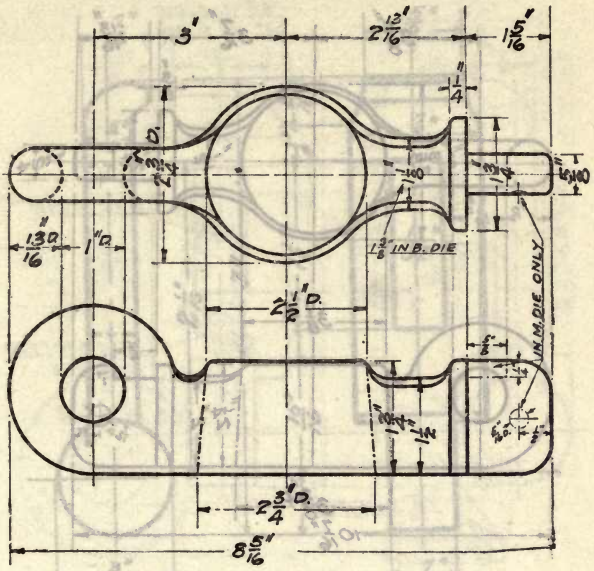

CROSS-HEAD, BLOCK, WOOD, SNATCH, 12″

Weight, lbs. **Die number, 1362-MB**
Former die numbers, (5-107) (71)

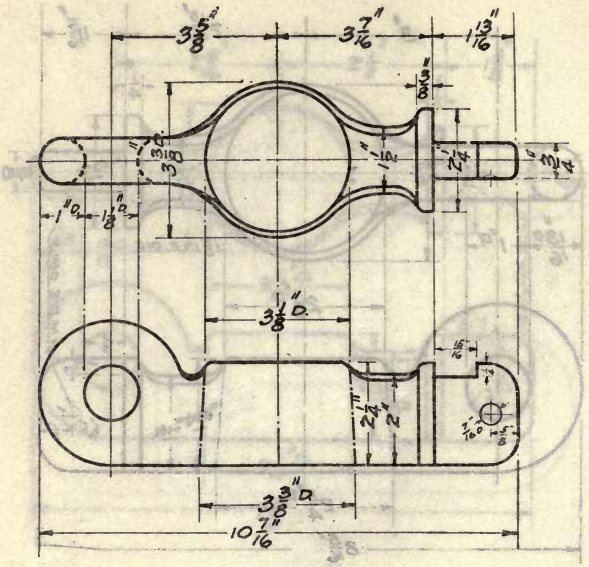

CROSS-HEAD, BLOCK, WOOD, SNATCH, 14″

Weight, lbs. **Die number, 1363-MP**
Former die number, (5-115)

NOT STANDARD STOCK

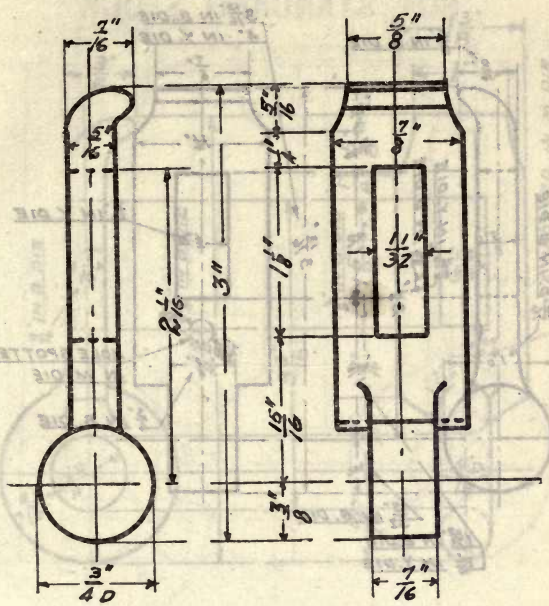

HASP, BLOCK, WOOD, SNATCH, 5″

Weight, lbs. Die number, 1364-B
Former die number, (189)

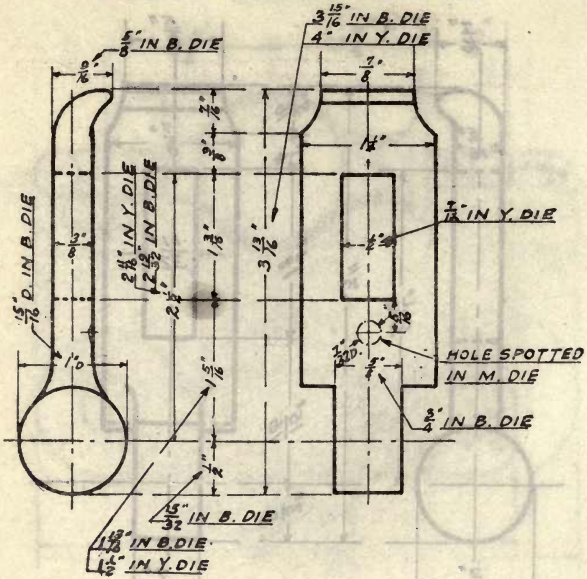

HASP, BLOCK, WOOD, SNATCH, 6″ AND 7″

Weight (steel), 0.5 lb. **Die number, 1365-MYPB**
Former die numbers, (5-84) (122) (192) (42)

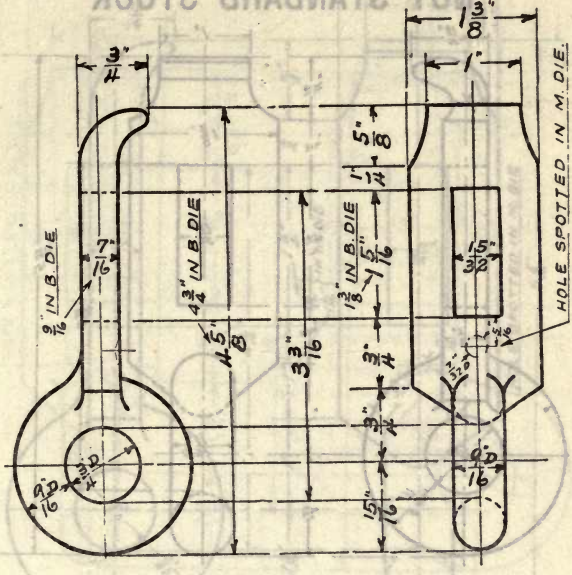

HASP, BLOCK, WOOD, SNATCH, 8″

Weight (steel), 1.2 lbs. **Die number, 1366-MPB**
Former die numbers, (5-92) (194) (75)

NOT STANDARD STOCK

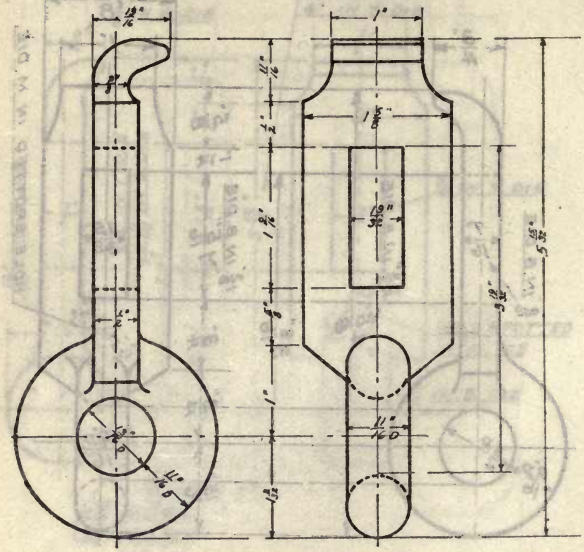

HASP, BLOCK, WOOD, SNATCH, 9″

Weight, **lbs.** **Die number, 1367-B**
Former die number, (188)

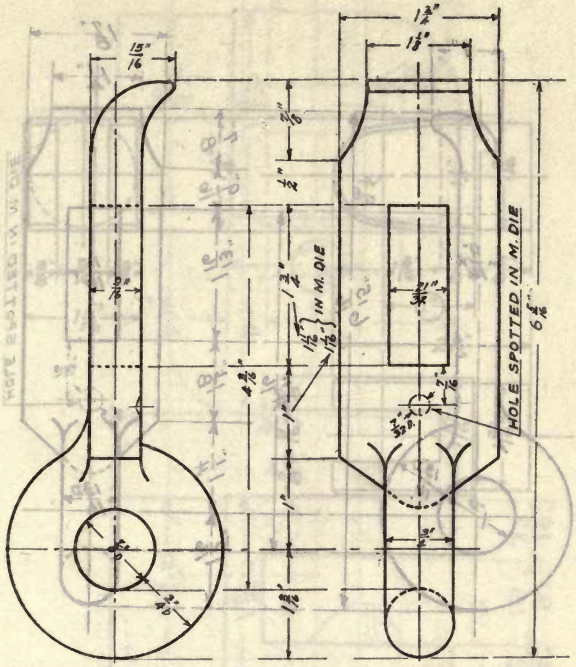

HASP, BLOCK, WOOD SNATCH, 10″

Weight, lbs. **Die number, 1368-MB**
Former die numbers, (5-100) (181)

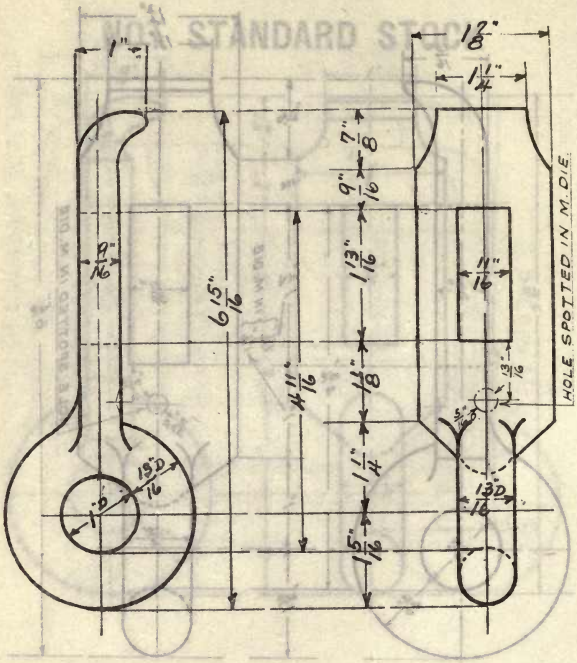

HASP, BLOCK, WOOD SNATCH, 12″

Weight, lbs. **Die number, 1369-MB**
Former die numbers, (5-108) (155)

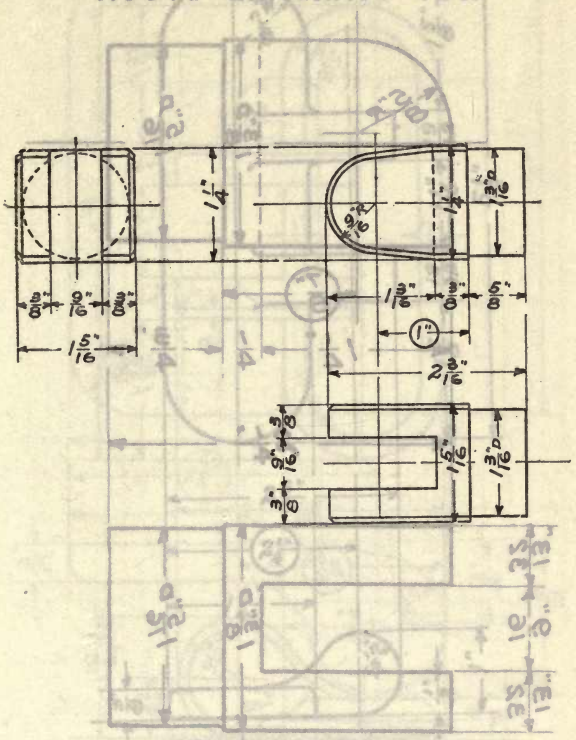

HINGE, FEMALE, 1″

Size of shank, 5/8″ x 1 3/16″ D

For male part see die number 1388

Weight (steel), 0.75 lb.

Die number, 1370-B
Former die number, (118)

NOT STANDARD STOCK

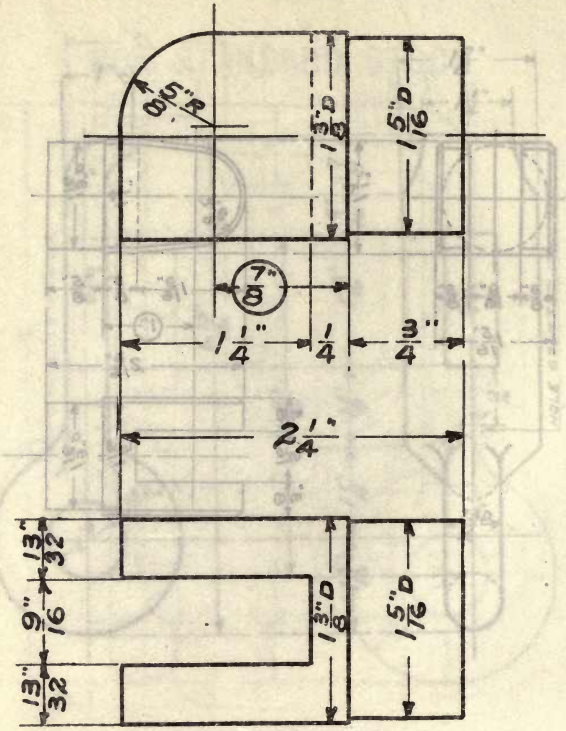

HINGE, FEMALE, 7/8″

Size of shank, 3/4″ x 1 5/16″ D.

For male part see die number 1387

Weight (steel), 0.69 lb. **Die number, 1371-Y**
Former die number, (401)

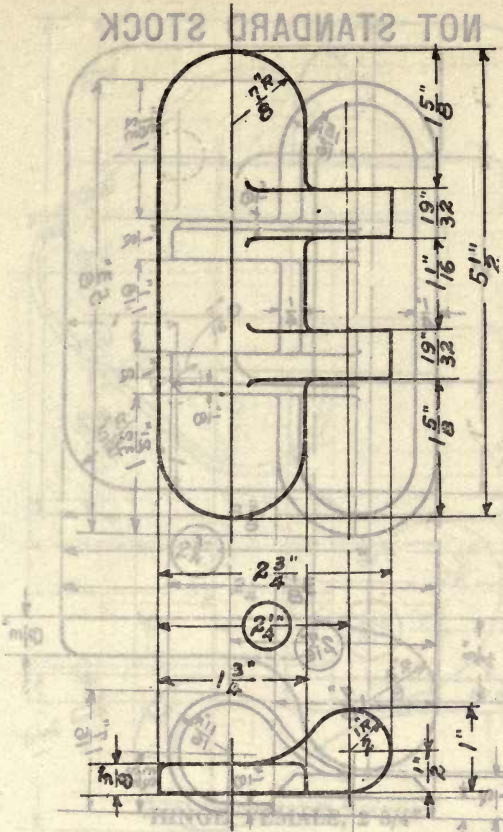

HINGE, FEMALE, 2 1/4″

Size of pad, 5 1/2″ x 1 3/4″ x 3/8″

For male part see die number 1390

Weight (steel), 1.3 lbs. **Die number, 1372-Y**
Former die number, (108)

NOT STANDARD STOCK

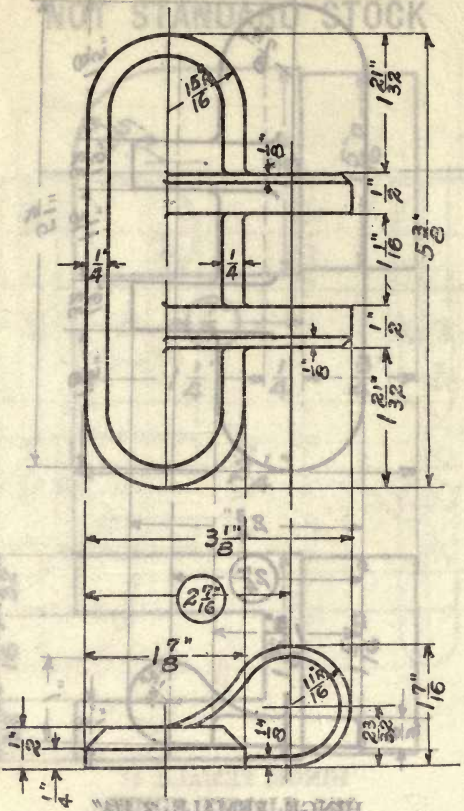

HINGE, FEMALE, 2 7/16″

Size of pad, 5 3/8″ x 1 7/8″ x 1/2″

For male part see die number 1414

Weight (steel), 1.7 lbs.

Die number, 1373-B
Former die number, (67)

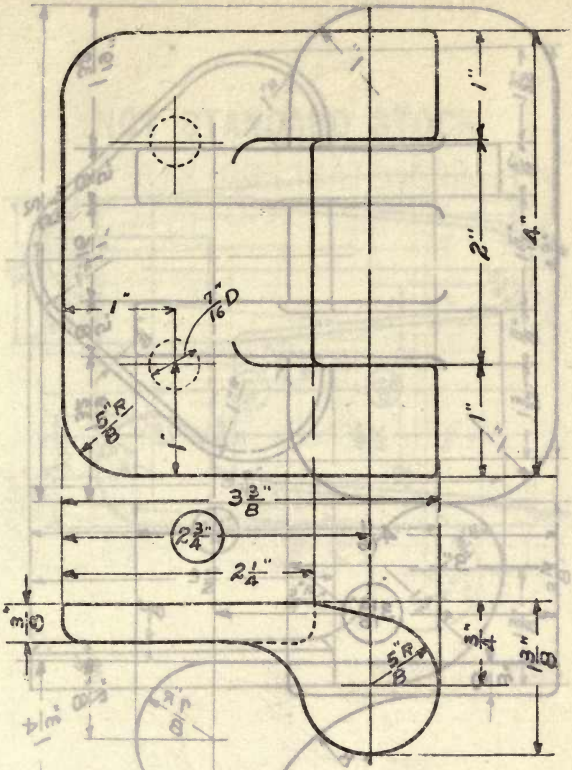

HINGE, FEMALE, 2 3/4″

Size of pad, 4″ x 2 1/4″ x 3/8″

For male part see die number 1386

Weight, lbs. **Die number, 1374-M**
Former die number, (3-43)

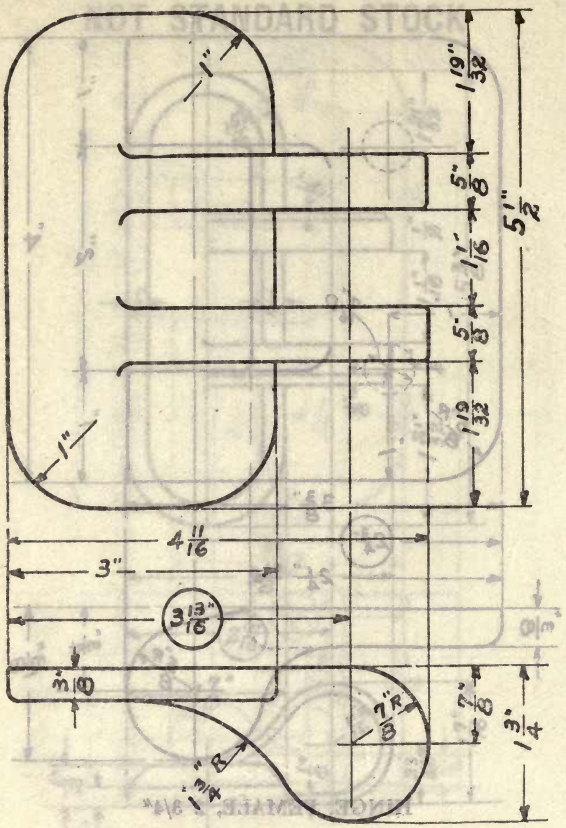

HINGE, FEMALE, 3 13/16″

Size of pad, 5 1/2′ x 3′ x 3/8′

For male part see die number 1389

Weight (steel), 3.0 lbs. **Die number, 1375-Y**
Former die number, (310)

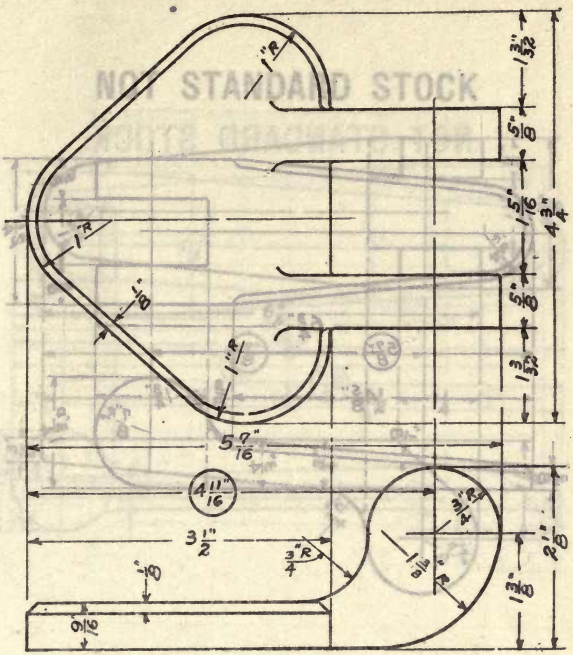

HINGE, FEMALE, 4 11/16″

Size of pad, 4 3/4″ x 3 1/2″ x 9/16″

For male part see die number 1415

Weight (steel), 4.3 lbs. **Die number, 1376-Y**
Former die number, (359)

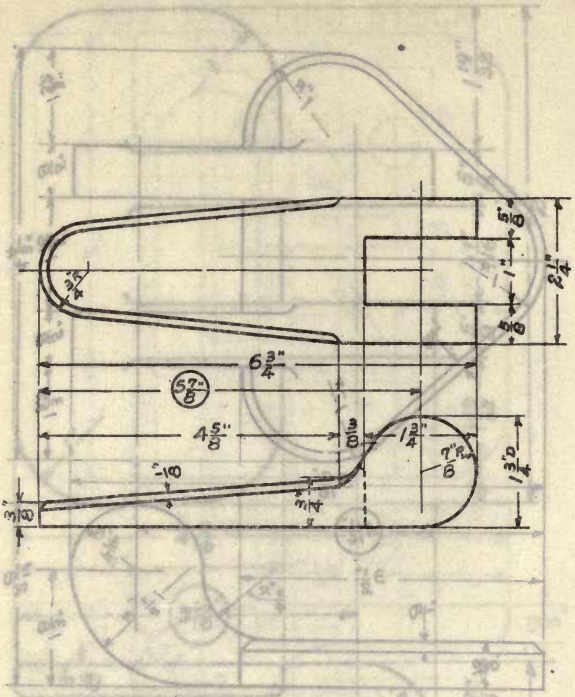

HINGE, FEMALE, 5 7/8″

Size of pad, 4 5/8″ x 2 1/4″ x 3/4″

Used with drop bolt

Weight (steel), 2.7 lbs. Die number, 1377-BY
Former die numbers, (83) (129)

NOT STANDARD STOCK

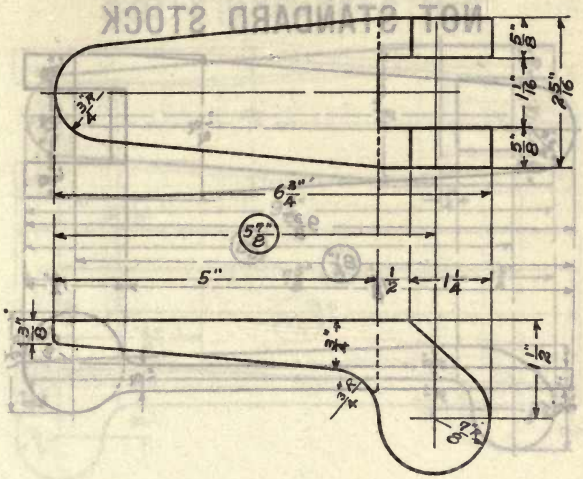

HINGE, FEMALE, 5 7/8″

Size of pad, 5″ x 2 5/16″ x 3/4″

For male part see die number 1416

Weight (steel), 3.0 lbs. **Die number, 1378-Y**
Former die number, (130)

NOT STANDARD STOCK

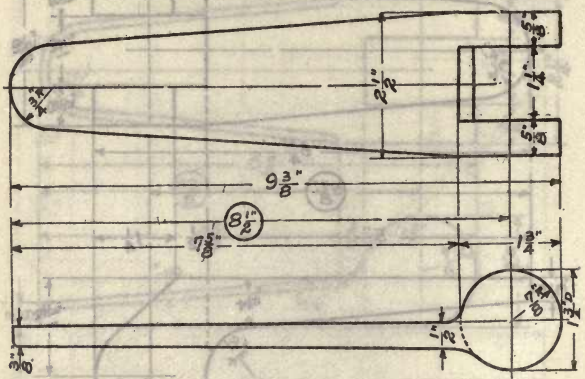

HINGE, FEMALE, 8 1/2″

Size of pad, 7 5/8″ x 2 1/2″ x 1/2″
Nonstandard
For standard hinge see die number 1380

Weight (steel), 8.4 lbs. Die number, 1379-N
Former die number, (4-25)

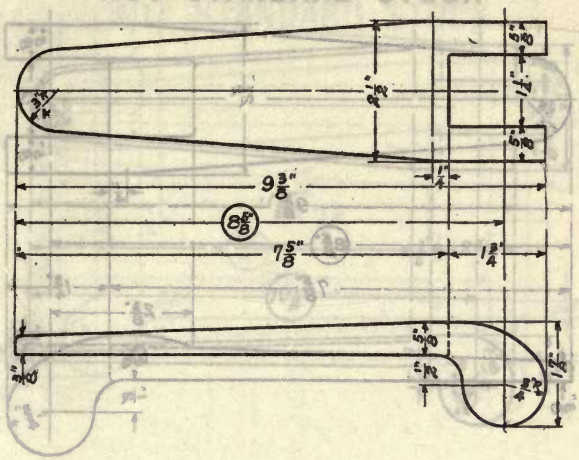

HINGE, FEMALE, 8 5/8″

Size of pad, 7 3/8″ x 2 1/2″ x 5/8″

For male part see die numbers 1417 and 1419

Weight (steel), 3.4 lbs. **Die number, 1380-NYB**
Former die numbers, (4-6) (125) (168)

NOT STANDARD STOCK

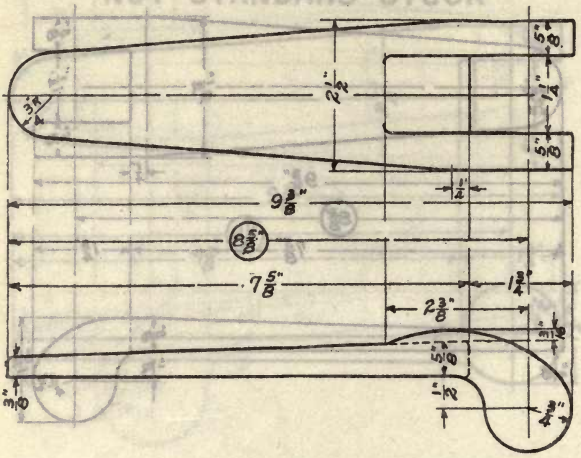

HINGE, FEMALE, 8 5/8″

Size of pad, 7 5/8″ x 2 1/2″ x 5/8″

For male part see die number 1417

Weight, lbs. **Die number, 1381-M**
Former die number, (4-6)

NOT STANDARD STOCK

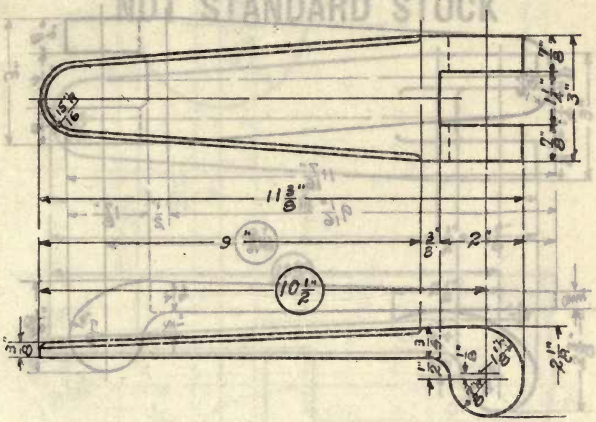

HINGE, FEMALE, 10 1/2"

Size of pad, 9" x 3" x 3/4"

For male part see die number 1420

Weight (steel), 5.0 lbs. **Die number, 1382-B**
Former die number, (131)

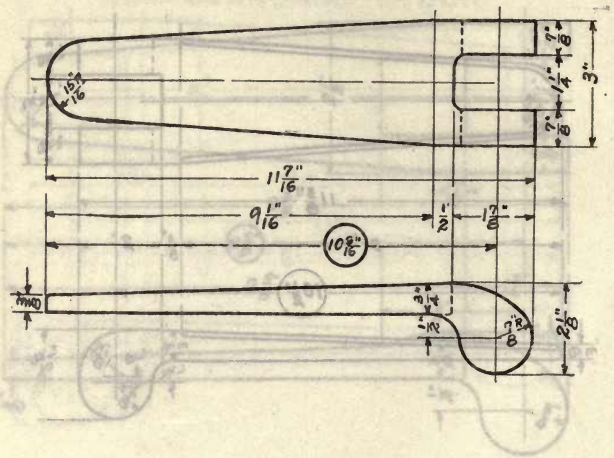

HINGE, FEMALE, 10 9/16″

Size of pad, 9 1/16″ x 3″ x 3/4″

For male part see die numbers 1417 and 1418

Weight (steel), 6.3 lbs. Die number, 1383-NY
Former die numbers, (4-14) (126)

NOT STANDARD STOCK

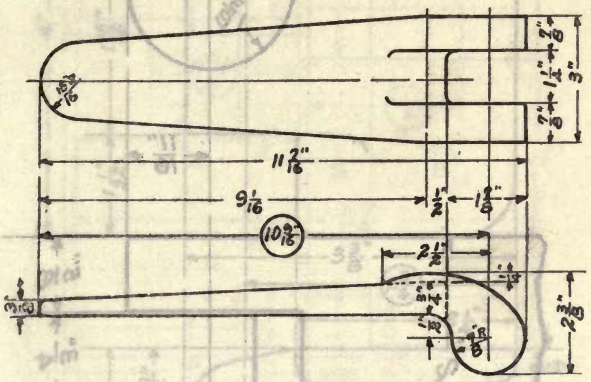

HINGE, FEMALE, 10 9/16″

Size of pad, 9 1/16″ x 2″ x 3/4″

For male part see die number 1420

Weight, lbs. Die number, 1384-M
Former die number, (4-14)

NOT STANDARD STOCK

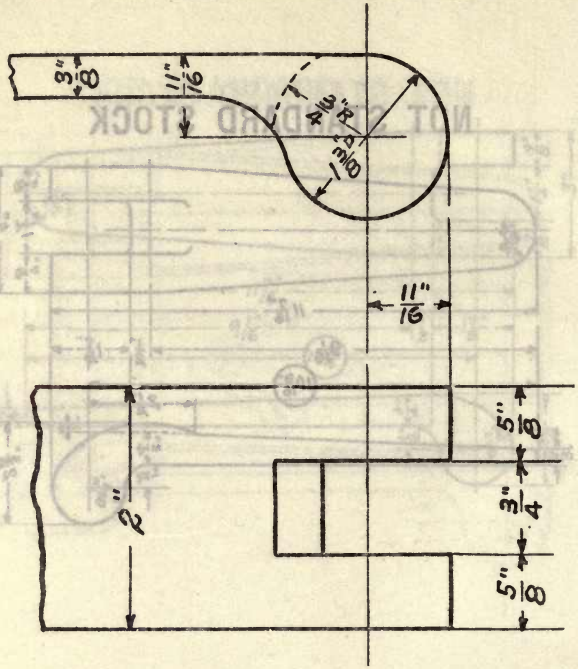

HINGE, FEMALE, OPEN DIE

Used as strap for metal hose rack

For male part see die numbers 1396 and 1397

Weight, lbs. Die number, 1385-BY
Former die numbers, (87) (342)

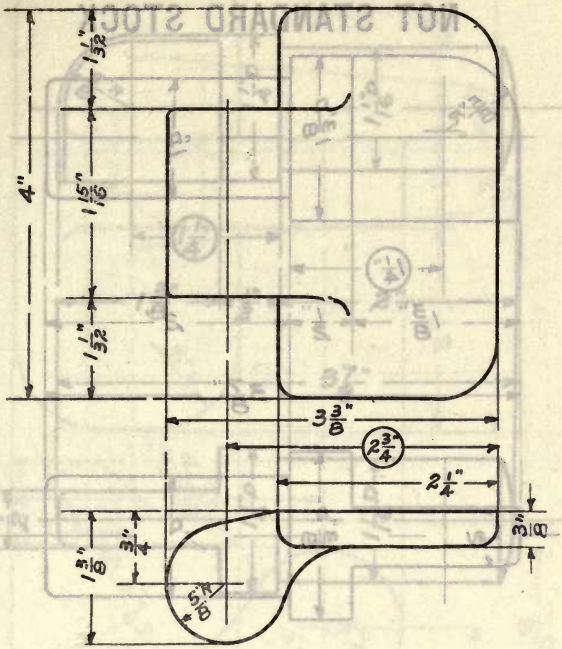

HINGE, MALE, 2 3/4″

Size of pad, 4″ x 2 1/4″ x 3/8″

For female part see die number 1374

Weight, lbs. **Die number, 1386-M**
Former die number, (3-42)

NOT STANDARD STOCK

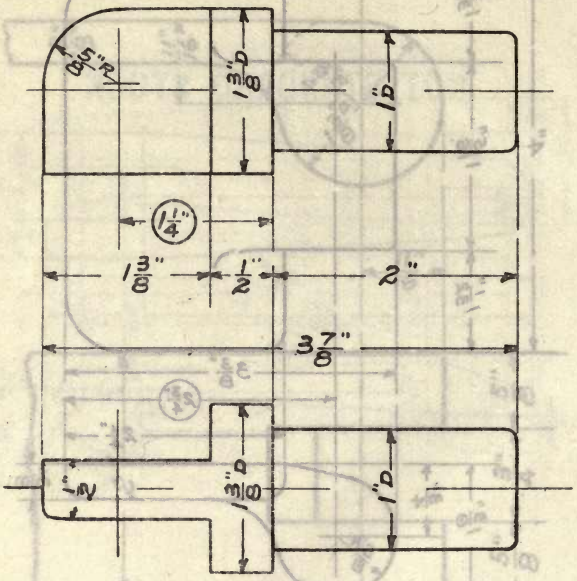

HINGE, MALE, 1 1/4″

Size of shank, 2″ x 1″ D.

For female part see die number 1371

Weight (steel), 0.88 lb. **Die number, 1387-Y**
Former die number, (400)

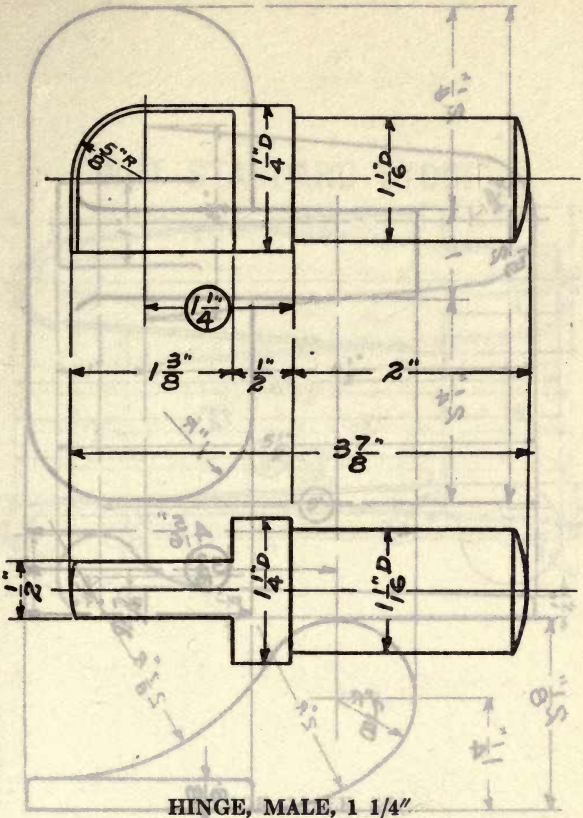

HINGE, MALE, 1 1/4″

Size of shank, 2″ x 1 1/16″ D.

For female part see die number 1370

Weight (steel), 0.94 lb. **Die number, 1388-B**
Former die number, (117)

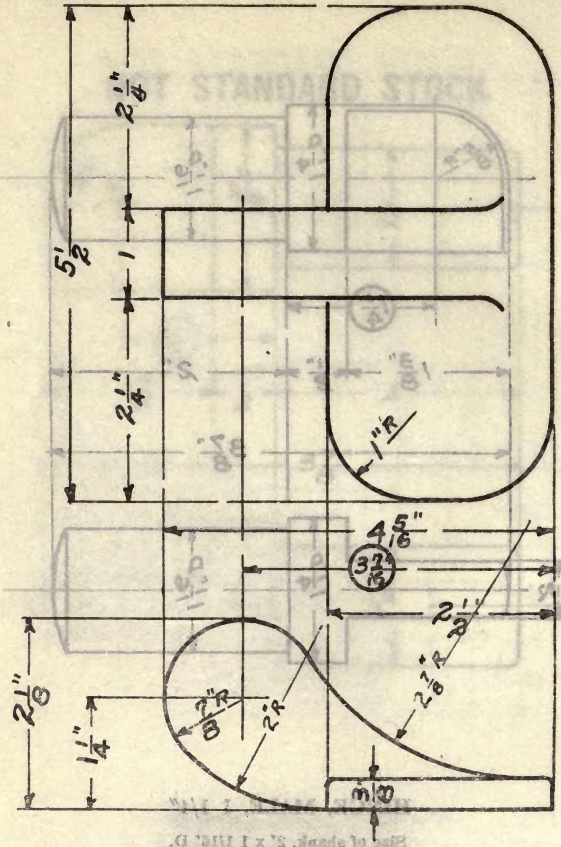

HINGE, MALE, 3 7/16″

Size of pad, 5 1/2″ x 2 1/2″ x 3/8″

For male part see die number 1375

Weight (steel), 2.7 lbs. **Die number, 1389-Y**
Former die number, (311)

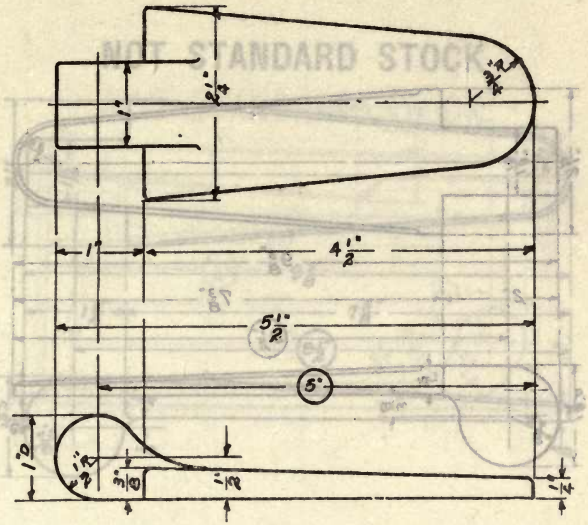

HINGE, MALE, 5″

Size of pad, 4 1/2″ x 2 1/4″ x 3/8″

For female part see die number 1372

Weight (steel), 1.0 lb. **Die number, 1390-Y**
Former die number, (105)

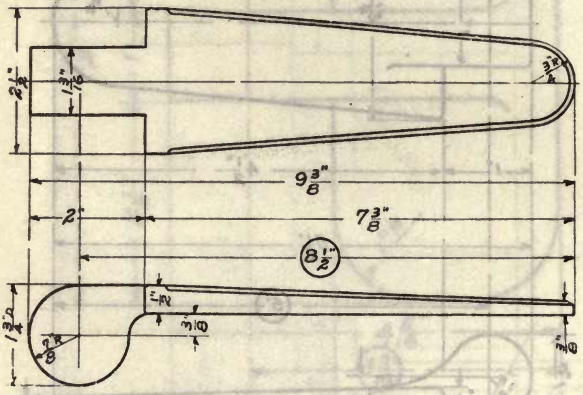

HINGE, MALE, 8 1/2″

Size of pad, 7 3/8′ x 2 1/2′ x 1/2′

Weight (steel), 3.3 lbs. Die number, 1391-MNX
Former die numbers, (4-4) (4-4) (127)

NOT STANDARD STOCK

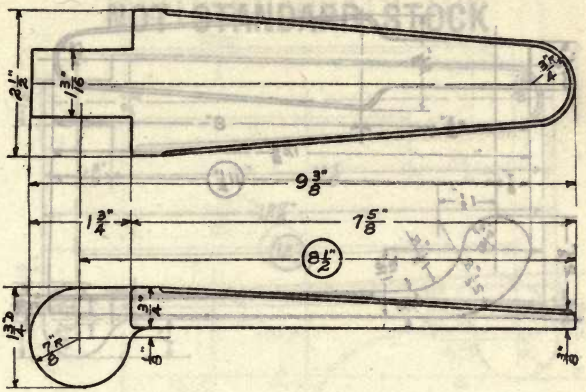

HINGE, MALE, 8 1/2″

Size of pad, 7 5/8″ x 2 1/2″ x 3/4″

For female part see die numbers 1409 and 1410

Weight (steel), 3.5 lbs. **Die number, 1392-B**
Former die number, (85)

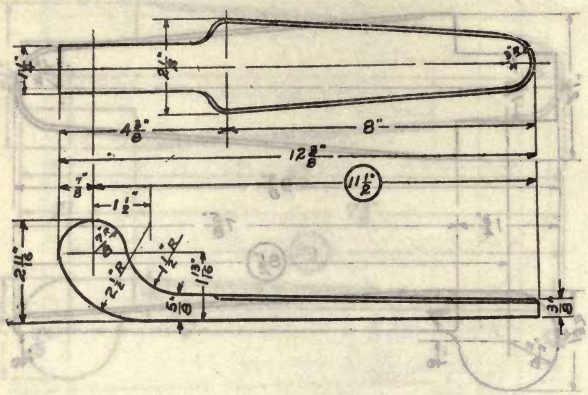

HINGE, MALE, 11 1/2″

Size of pad, 8″ x 2 1/2″ x 5/8″

For female part see die number 1412

Weight (steel), 4.5 lbs. **Die number, 1393-YM**
Former die number, (405)

NOT STANDARD STOCK

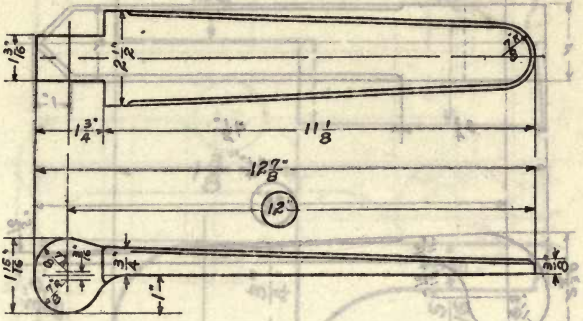

HINGE, MALE, 12″

Size of pad, 11 1/8″ x 2 1/2″ x 3/4″

For female part see die number 1411

Weight (steel), 5.0 lbs. Die number, 1394-BYMN
Former die numbers, (114) (124) (4-24) (4-24)

NOT STANDARD STOCK

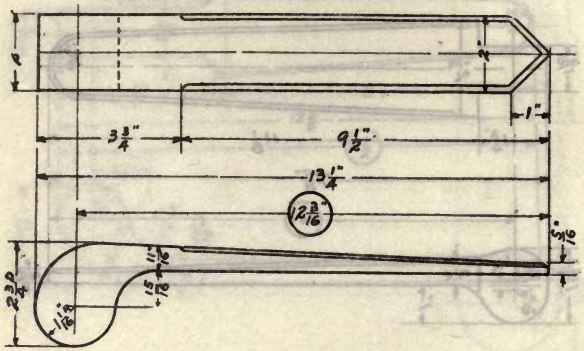

HINGE, MALE, 12 3/16″

Size of pad, 9 1/2″ x 2″ x 11/16″

Weight (steel), 1.75 lbs. **Die number, 1395-N**
Former die number, (3-75)

NOT STANDARD STOCK

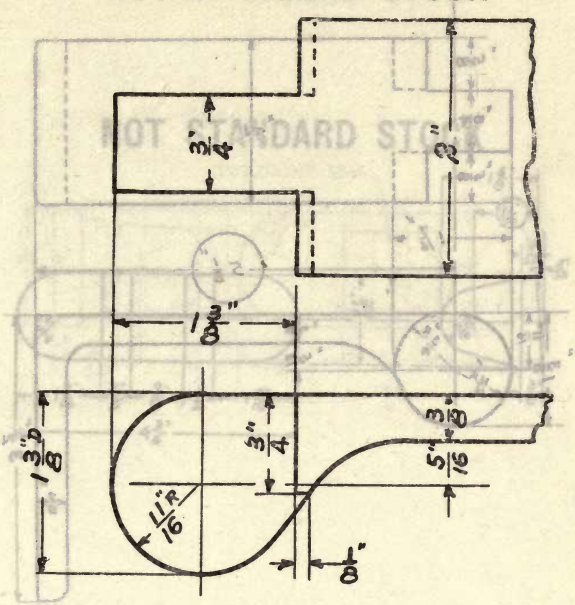

HINGE, MALE, OPEN DIE

Used with metal hose rack

For female part see die number 1385

Weight, lbs. **Die number, 1396-B**
Former die number, (97)

NOT STANDARD STOCK

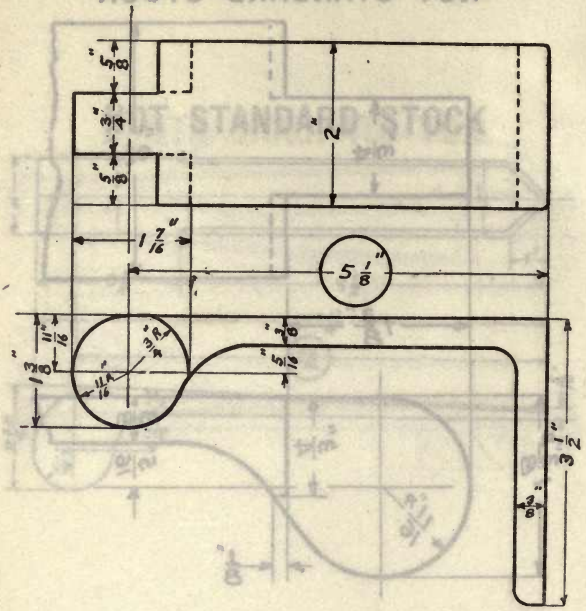

HINGE, MALE, 5 1/8″

Used with metal hose rack

For female part see die number 1385

Weight (steel), 2.1 lbs. **Die number, 1397-Y**
Former die number, (343)

NOT STANDARD STOCK

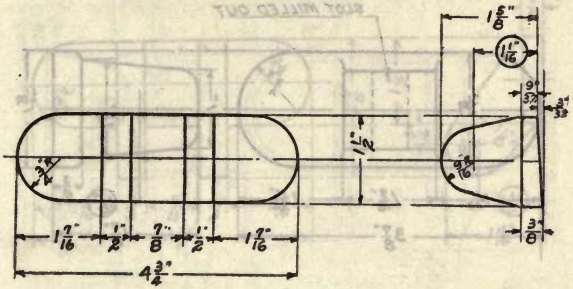

HINGE PAD, FEMALE, 1 1/16″

Size of pad, 4 3/4″ x 1 1/2″ x 3/8″

Used as drop bolt pad.

Weight (steel), 1.3 lbs. **Die number, 1398-Y**
Former die number, (276)

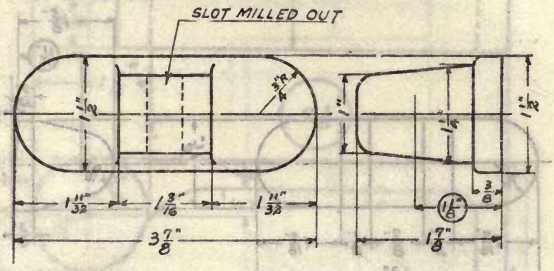

HINGE PAD, FEMALE, 1 1/8″

Size of pad, 3 7/8″ x 1 1/2″ x 3/8″

Used as folding berth catch pad

Weight (steel), 1.13 lbs. **Die number, 1399-B**
Former die number, (116)

NOT STANDARD STOCK

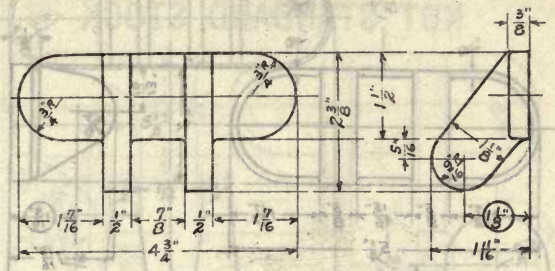

HINGE PAD, FEMALE, 1 1/8″

Size of pad, 4 3/4″ x 1 1/2″ x 3/8″

Used as drop bolt pad

Weight (steel), 1.3 lbs. **Die number, 1400-Y**
Former die number, (357)

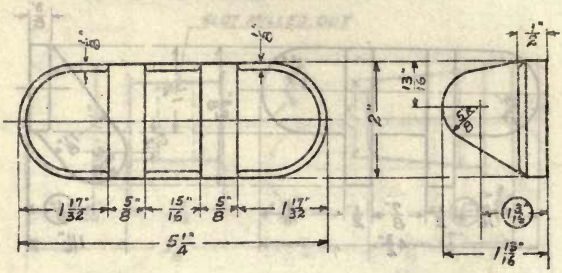

HINGE PAD, FEMALE, 1 3/16″

Size of pad, 5 1/4″ x 2″ x 1/2″

Used as drop bolt pad

Weight (steel), 2.3 lbs. **Die number, 1401-B**
Former die number, (124)

NOT STANDARD STOCK

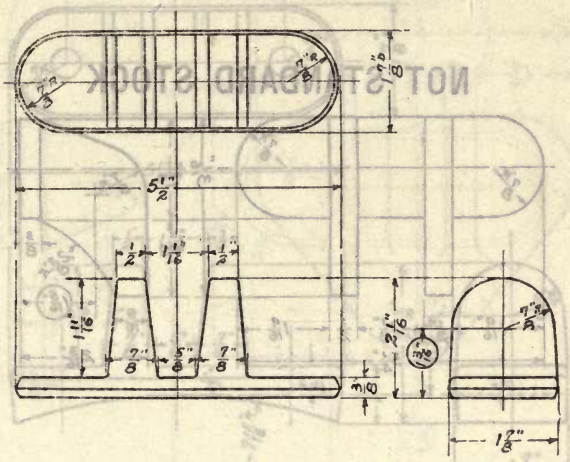

HINGE PAD, FEMALE, 1 3/16″

Size of pad, 5 1/2″ x 1 3/4″ x 3/8″

Used as drop bolt pad

Weight (steel), 2.3 lbs.

Die number, 1402-Y
Former die number, (355)

NOT STANDARD STOCK

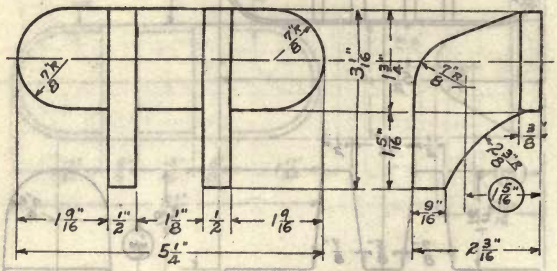

HINGE PAD, FEMALE, 1 5/16″

Size of pad, 5 1/4″ x 1 3/4″ x 3/8″

Used as drop bolt pad

Weight (steel), 2.6 lbs.

Die number, 1403-Y
Former die number, (271)

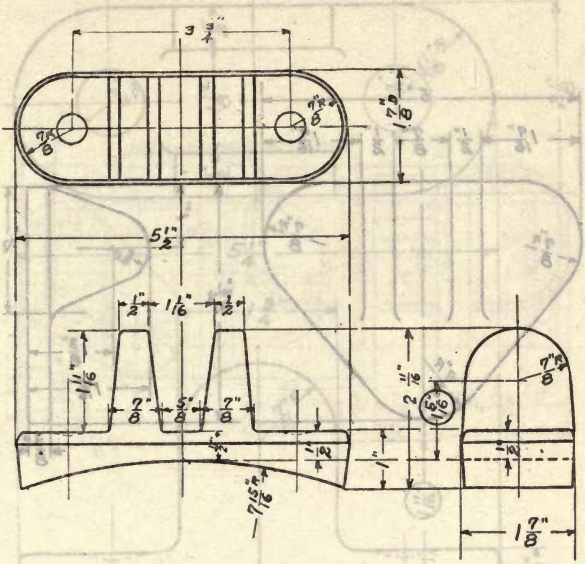

HINGE PAD, FEMALE, 1 5/16″

Size of pad, 5 1/2″ x 1 7/8″ x 1/2″

Weight, lbs. **Die number, 1404-Y**
Former die number, (355-A)

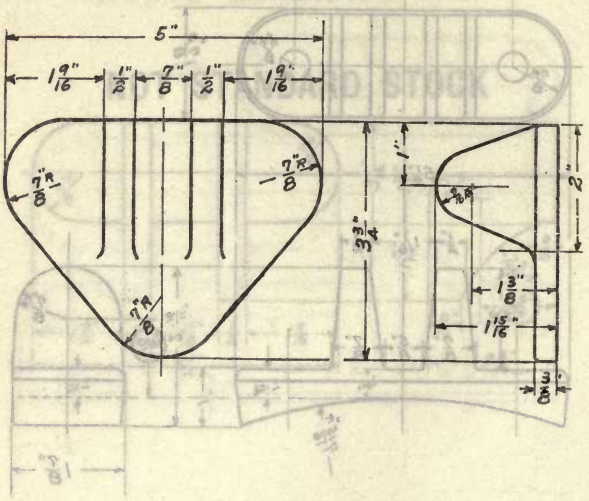

HINGE PAD, FEMALE, 1 3/8″

Size of pad, 5″ x 3 3/4″ x 3/8″

Used as drop bolt pad

Weight (steel), 2.5 lbs. **Die number, 1405-Y**
Former die number, (272)

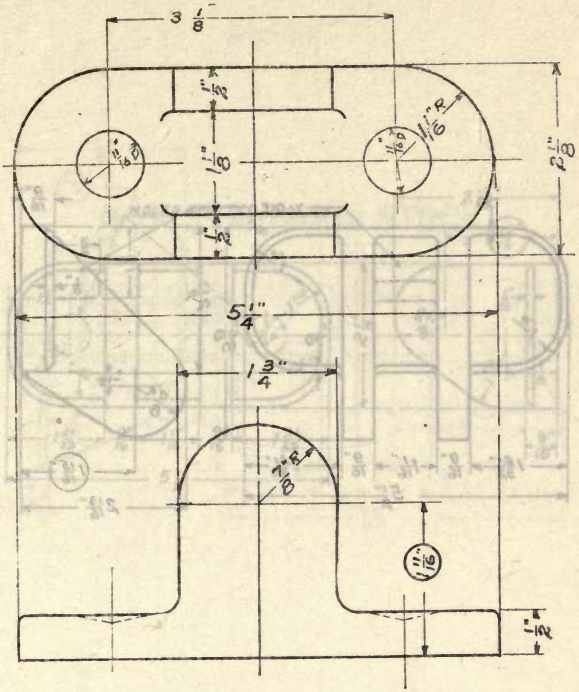

HINGE PAD, FEMALE, 1 11/16″

Size of pad, 5 1/4″ x 2 1/8″ x 1/2″

Weight, lbs. **Die number, 1406-M**
Former die number, (4-63)

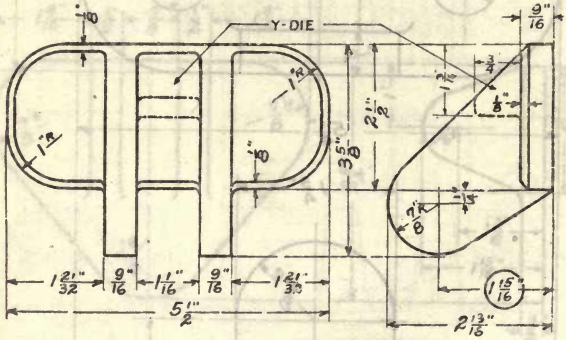

HINGE PAD, FEMALE, 1 15/16″

Size of pad, 5 1/2″ x 2 1/2″ x 9/16″

Used as drop bolt pad

Weight (steel), 4.4 lbs. **Die number, 1407-YB**
Former die numbers, (133) (82)

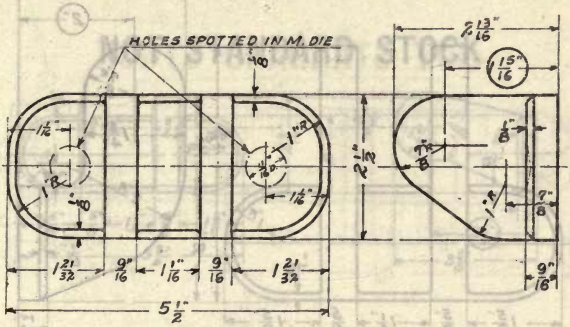

HINGE PAD, FEMALE, 1 15/16″

Size of pad, 5 1/2″ x 2 1/2″ x 9/16″

Used as drop bolt pad

Weight, lbs. **Die number, 1408-M**
Former die number, (4-21)

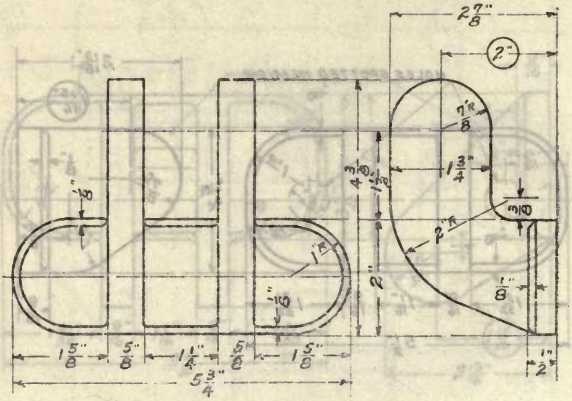

HINGE PAD, FEMALE, 2″

Size of pad, 5 3/4″ x 2″ x 1/2″

For male part see die number 1392

Weight (steel), 4.6 lbs. **Die number, 1409-B**
Former die number, (125)

NOT STANDARD STOCK

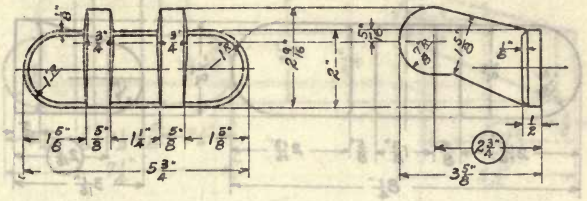

HINGE PAD, FEMALE, 2 3/4″

Size of pad, 5 3/4″ x 2″ x 1/2″

For male part see die number 1392

Weight, lbs. **Die number, 1410-B**
Former die number, (167)

NOT STANDARD STOCK

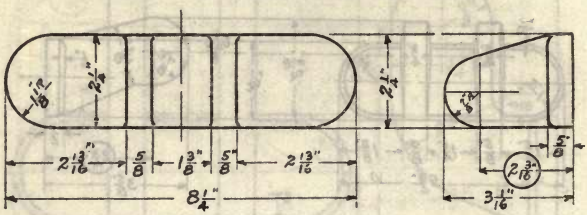

HINGE PAD, FEMALE, 2 13/16″

Size of pad, 8 1/4″ x 2 1/4″ x 5/8″

For male part see die number 1394

Weight (steel), 5.6 lbs. **Die number, 1411-Y**
Former die number, (363)

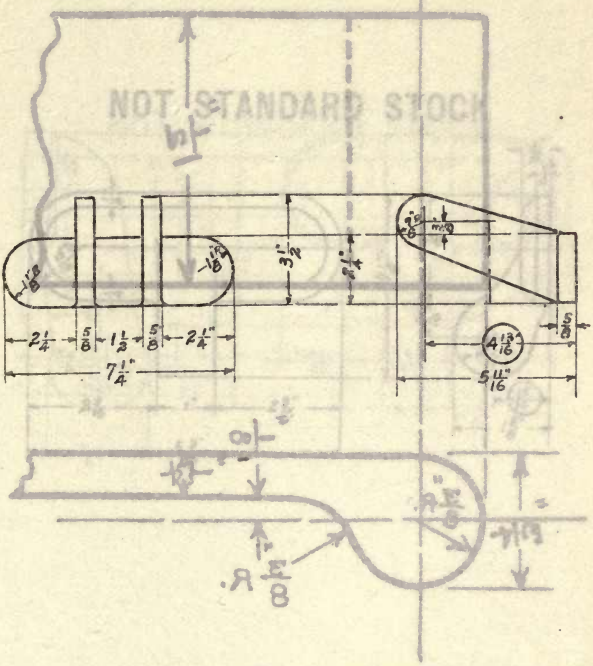

HINGE PAD, FEMALE, 4 13/16″

Size of pad, 7 1/4″ x 2 1/4″ x 5/8″

For male part see die number 1393

Weight (steel), 6.8 lbs. **Die number, 1412-YM**
Former die number, (404)

NOT STANDARD STOCK

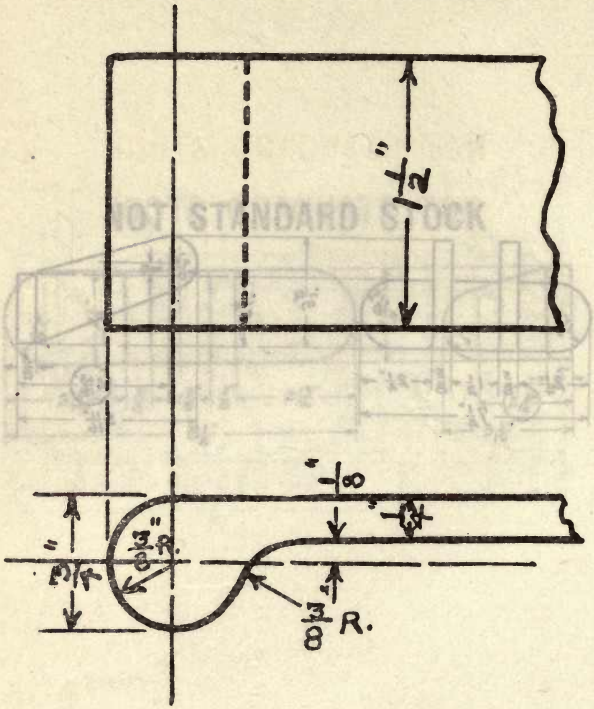

OPEN DIE

HINGE, DOOR, BUNKER, COAL

Used on steam cutters

Weight (steel), 1.0 lb. **Die number, 1413-N**
Former die number, (3-49)

NOT STANDARD STOCK

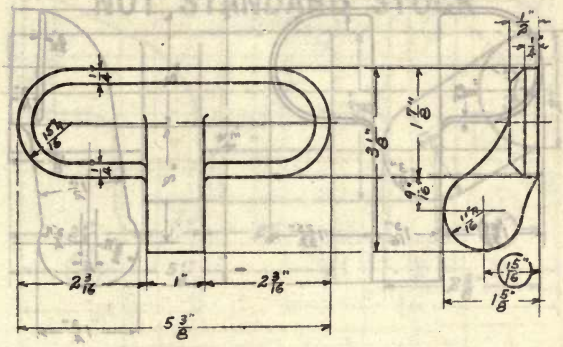

HINGE PAD, MALE, 15/16″

Size of pad, 5 3/8″ x 1 7/8″ x 1/2″

For female part see die number 1373

Weight (steel), 1.8 lbs.

Die number, 1414-B
Former die number, (68)

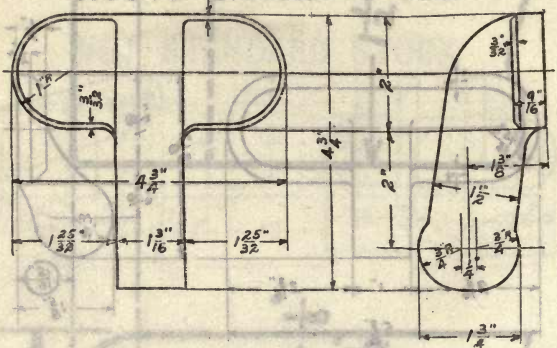

HINGE PAD, MALE, 1 3/8″

Size of pad, 4 3/4″ x 2″ x 9/16″

For female part see die number 1376

Weight, lbs. **Die number, 1415-Y**

Former die number, (358)

NOT STANDARD STOCK

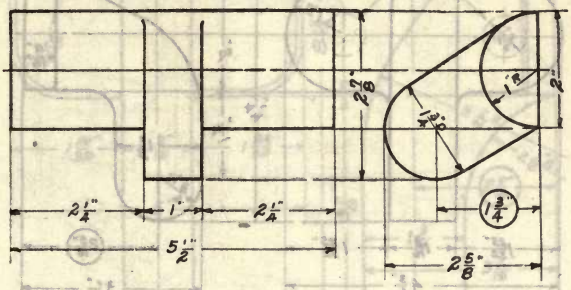

HINGE PAD, MALE, 1 3/4″

Size of pad, 5 1/2″ x 2″ x 1″

For female part see die number 1378

Weight (steel), 3.5 lbs. **Die number, 1416-Y**
Former die number, (132)

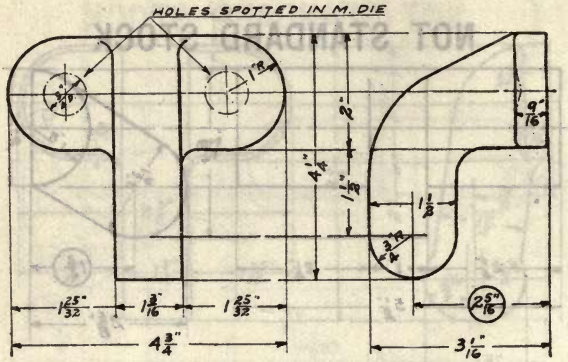

HINGE PAD, MALE, 2 5/16″

Size of pad, 4 3/4″ x 2″ x 9/16″

For female part see die numbers 1380 and 1381

Weight (steel), 3.9 lbs. Die number, 1417-NMYB
Former die numbers, (4-10) (4-10) (128) (163)

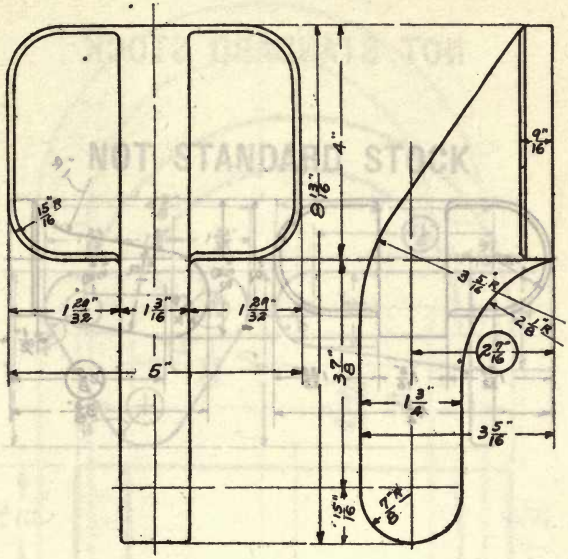

HINGE PAD, MALE, 2 7/16″

Size of pad, 5″ x 4″ x 9/16″

For female part see die number 1383

Weight (steel), 8.0 lbs.

Die number, 1418-YM
Former die number, (131)

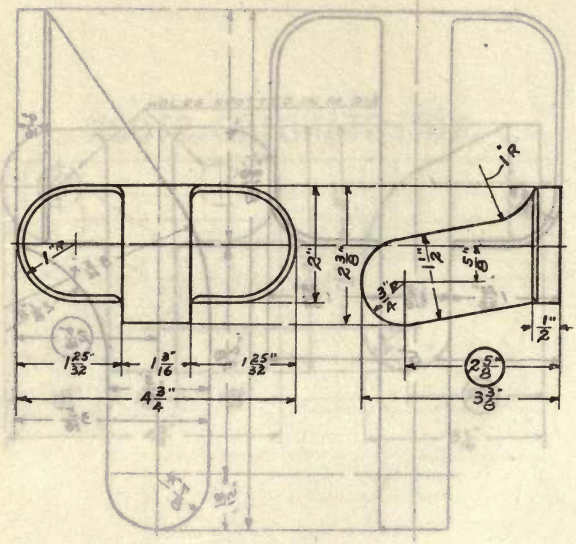

HINGE PAD, MALE, 2 5/8″

Size of pad, 4 3/4′ x 2′ x 1/2′

For female part see die number 1380

Weight (steel), 3.0 lbs.

Die number, 1419-Y
Former die number, (270)

NOT STANDARD STOCK

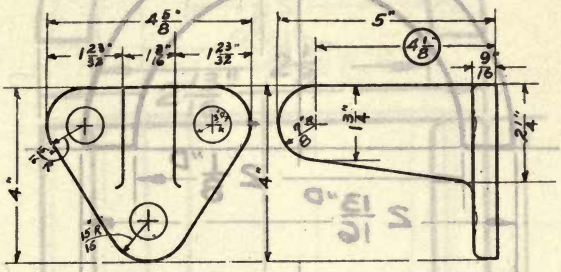

HINGE PAD, MALE, 4 1/8″

Size of pad, 4 5/8″ x 4″ x 9/16″

For female part see die numbers 1384 and 1382

Weight, lbs. **Die number, 1420-M**
Former die number, (4-15)

NOT STANDARD STOCK

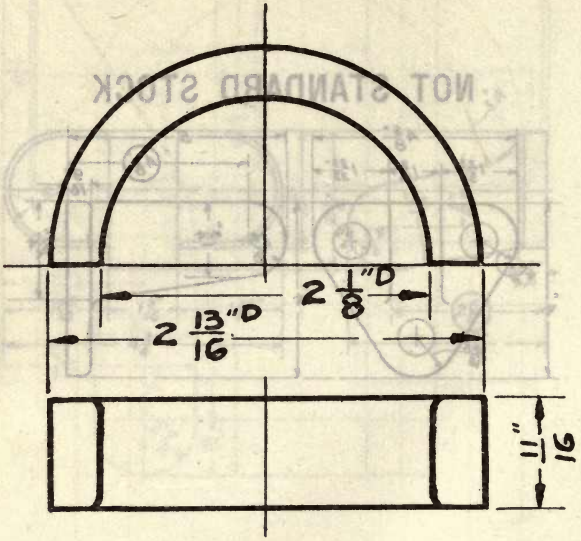

SLEEVE, HALF, BOLT, ARMOR, 2″

Length, 11/16″

Weight (steel), 0.56 lb. **Die number, 1421-Y**
Former die number, (279)

NOT STANDARD STOCK

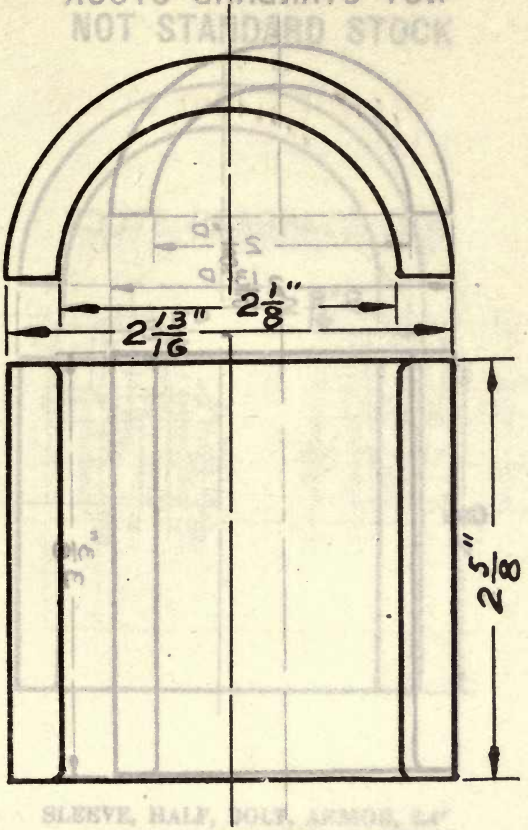

SLEEVE, HALF, BOLT, ARMOR, 2″

Length, 2 5/8″

Weight (steel), 2.1 lbs. **Die number, 1422-Y**
Former die number, (347)

NOT STANDARD STOCK

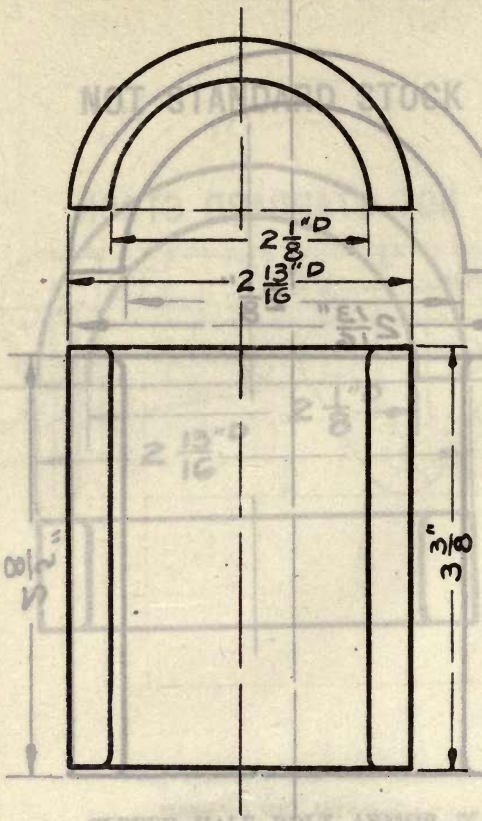

SLEEVE, HALF, BOLT, ARMOR, 2″

Length, 3 3/8″

Weight, lbs. **Die number, 1423-Y**
Former die number, (281)

NOT STANDARD STOCK

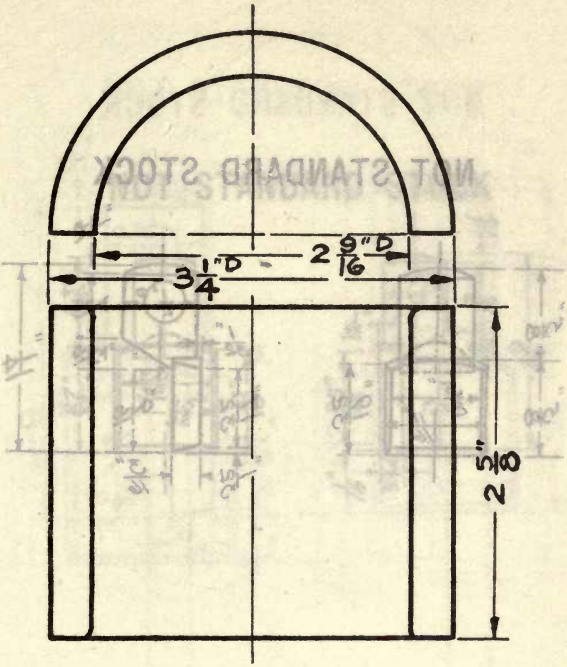

SLEEVE, HALF, BOLT, ARMOR, 2.4″

Length, 2 5/8″

Weight, lbs. **Die number, 1424-Y**
Former die number, (348)

NOT STANDARD STOCK

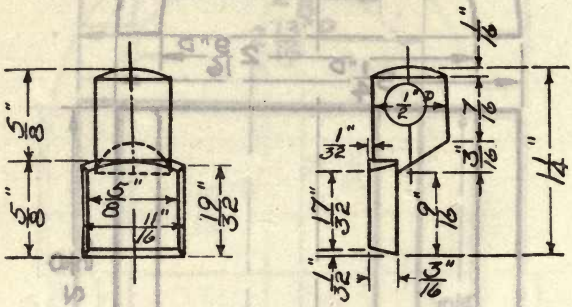

LUG, TERMINAL, 1/2″

Weight (n. brass), 0.06 lb. **Die number, 1425-Y**
Former die number, (321)

NOT STANDARD STOCK

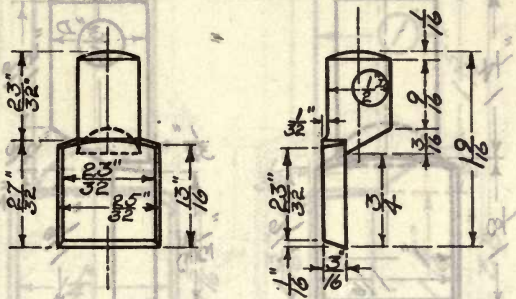

LUG, TERMINAL, 1/2″

Weight (n. brass), 0.13 lb. **Die number, 1426-Y**
Former die number, (320)

NOT STANDARD STOCK

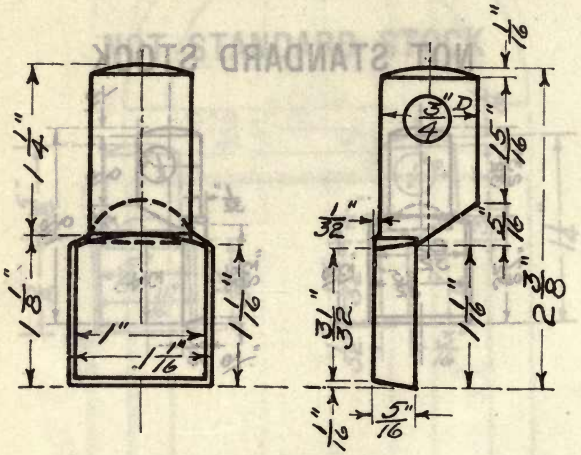

LUG, TERMINAL, 3/4″

Weight (n. brass), 0.34 lb. **Die number, 1427-Y**
Former die number, (319)

NOT STANDARD STOCK

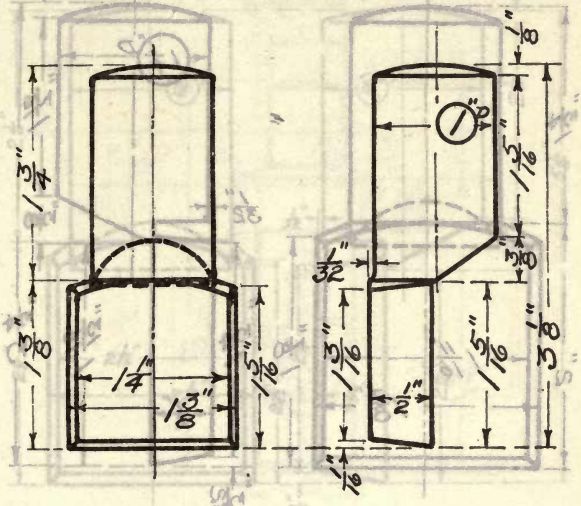

LUG, TERMINAL, 1″

Weight (n. brass), 0.88 lb. **Die number, 1428-Y**
Former die number, (318)

NOT STANDARD STOCK

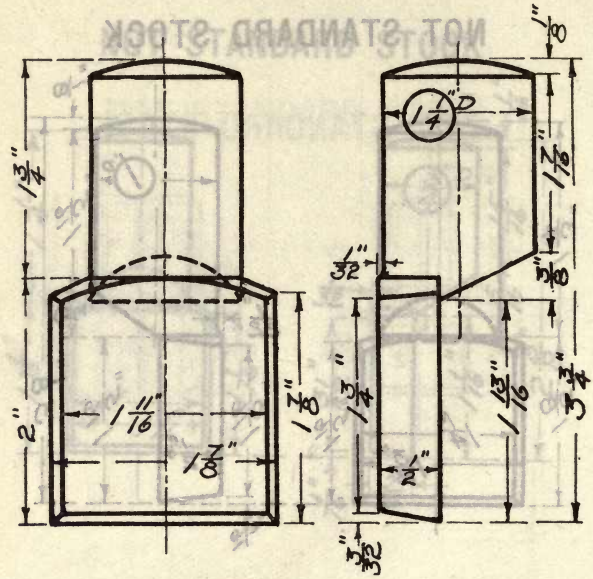

LUG, TERMINAL, 1 1/4″

Weight (n. brass), 1.6 lbs. **Die number, 1429-Y**
Former die number, (317)

NOT STANDARD STOCK

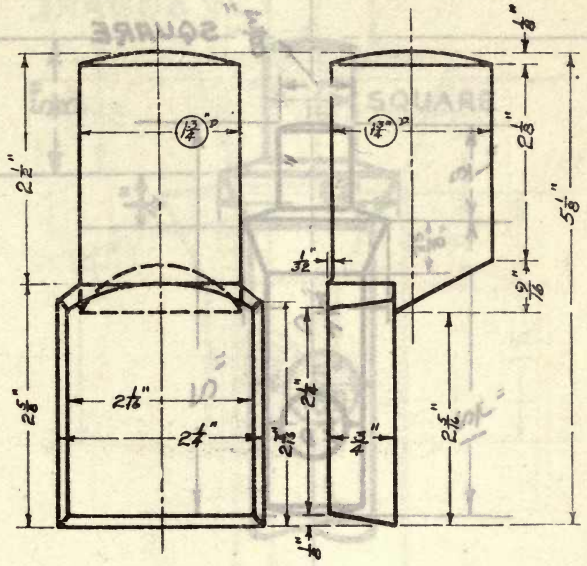

LUG, TERMINAL, 1 3/4″

Weight (n. brass), 3.6 lbs. **Die number, 1430-Y**
Former die number, (816)

NOT STANDARD STOCK

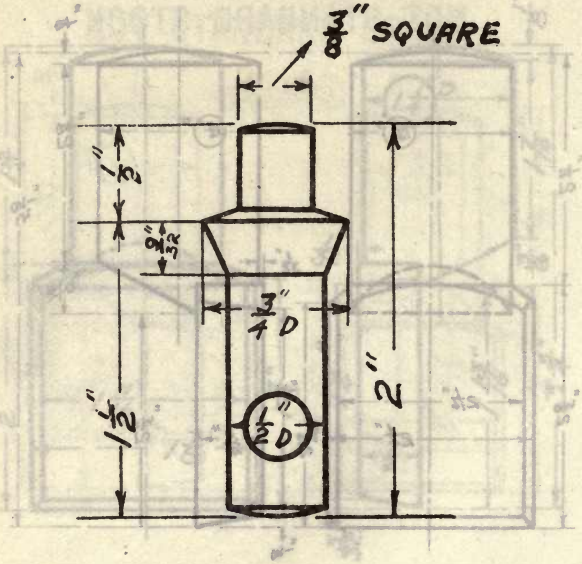

RIVET, TAP, 1/2″

Length, 1 1/2″

Weight (steel), 0.13 lb. **Die number, 1431-Y**
Former die number, (331)

NOT STANDARD STOCK

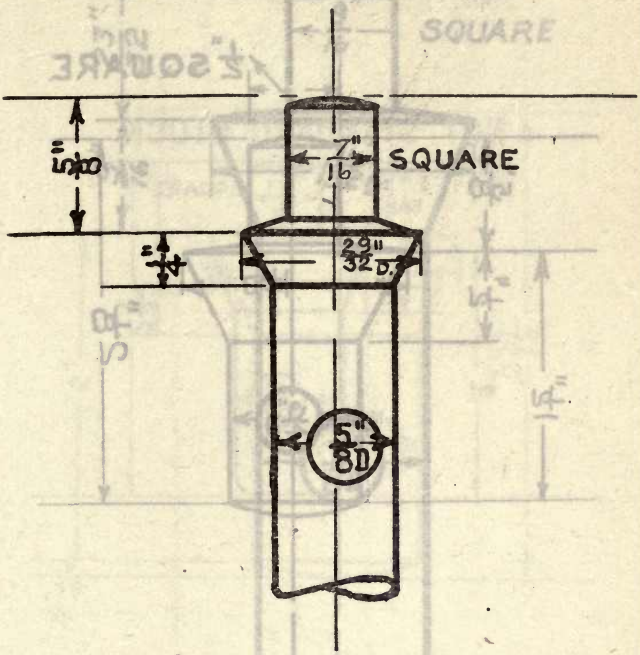

RIVET, TAP, 5/8″

Length, open die

Weight, lbs.

Die number, 1432-B
Former die number, (373)

NOT STANDARD STOCK

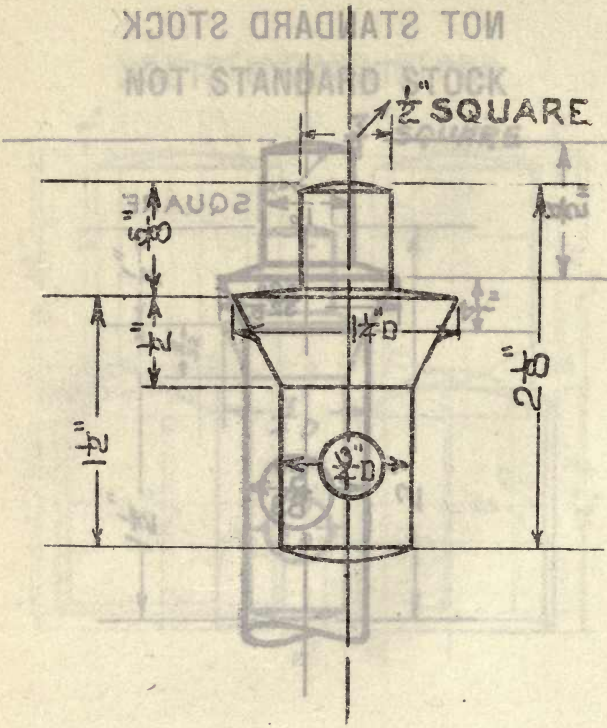

RIVET, TAP, 3/4″

Length, 1 1/2″

Weight (steel), 0.30 lb. **Die number, 1433-Y**
Former die number, (329)

NOT STANDARD STOCK

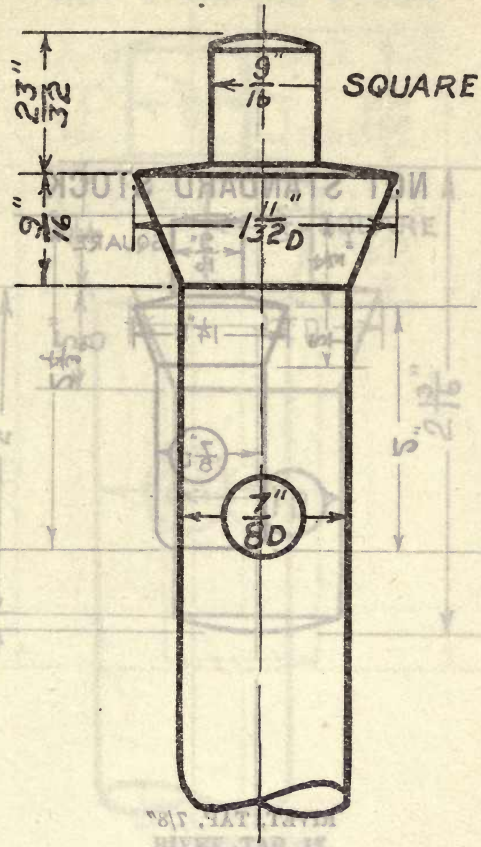

RIVET, TAP, 7/8″

Length, open die

Weight, lbs. **Die number, 1434-B**
Former die number, (374)

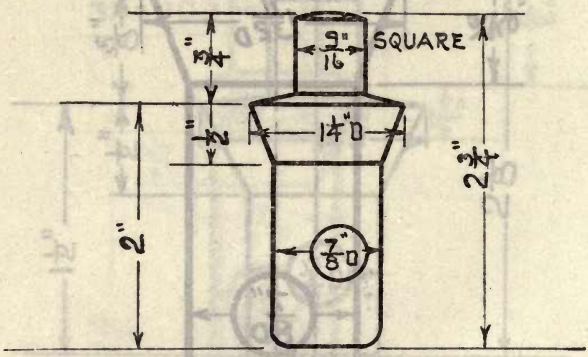

RIVET, TAP, 7/8″

Length, 2″

Weight (steel), 0.66 lb. **Die number, 1435-Y**
Former die number, (328)

NOT STANDARD STOCK

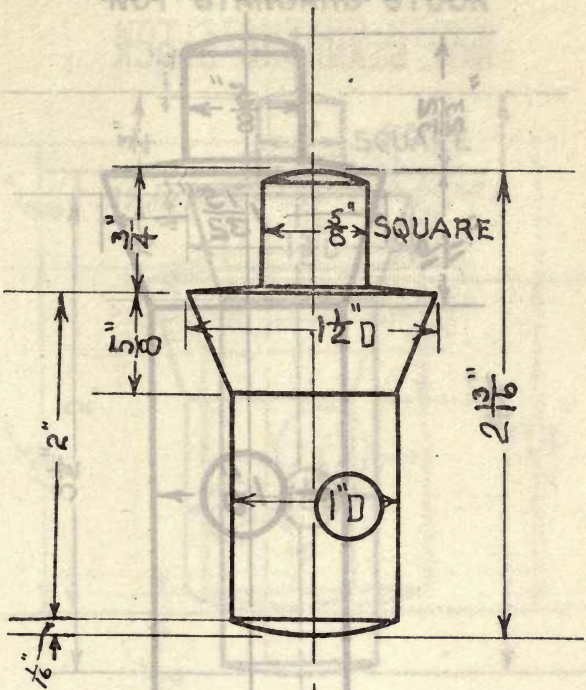

RIVET, TAP, 1″

Length, 2 1/16″

Weight (steel), 0.63 lb. **Die number, 1436-Y**
Former die number, (330)

NOT STANDARD STOCK

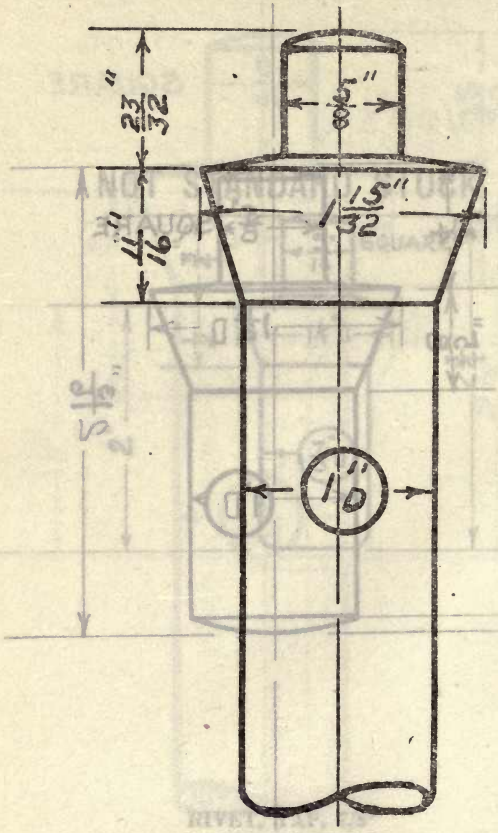

RIVET, TAP, 1″

Length, open die

Weight, lbs. **Die number, 1437-B**
Former die number, (375)

NOT STANDARD STOCK

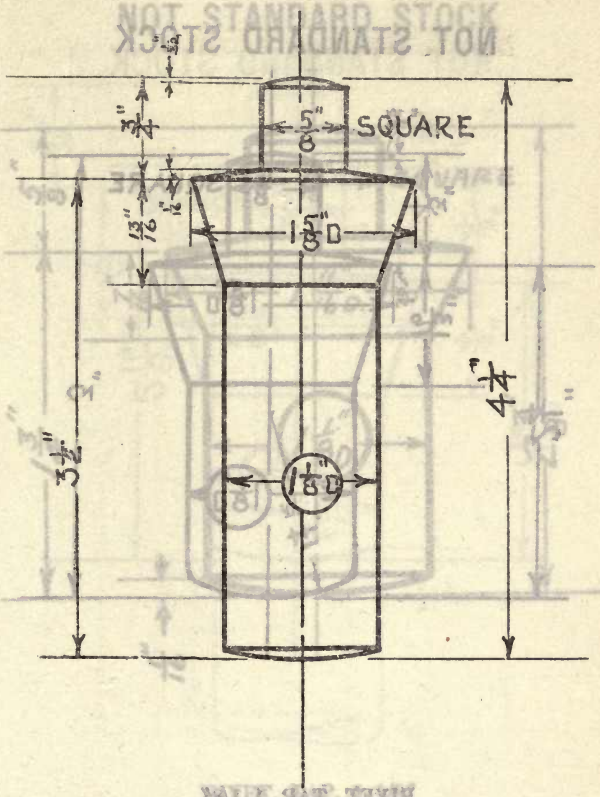

RIVET, TAP, 1 1/8″

Length, 3 1/2″

Weight (steel), 1.3 lbs. **Die number, 1438-Y**
Former die number, (327)

NOT STANDARD STOCK

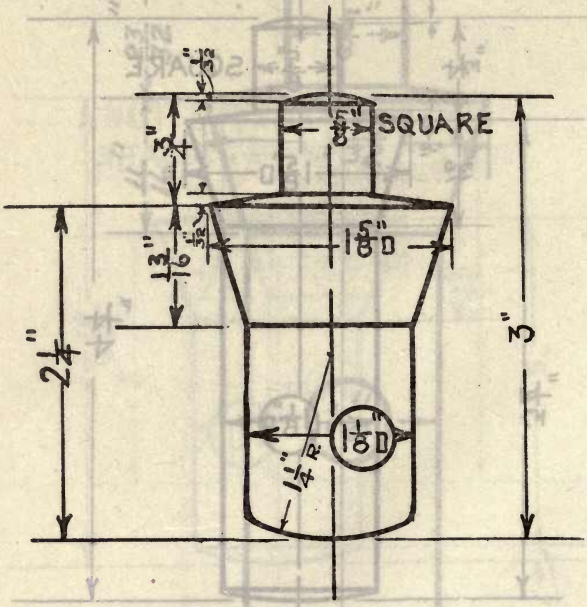

RIVET, TAP, 1 1/8″

Length, 2 1/4″

Weight (steel), 0.84 lb. **Die number, 1439-Y**
Former die number, (325)

NOT STANDARD STOCK

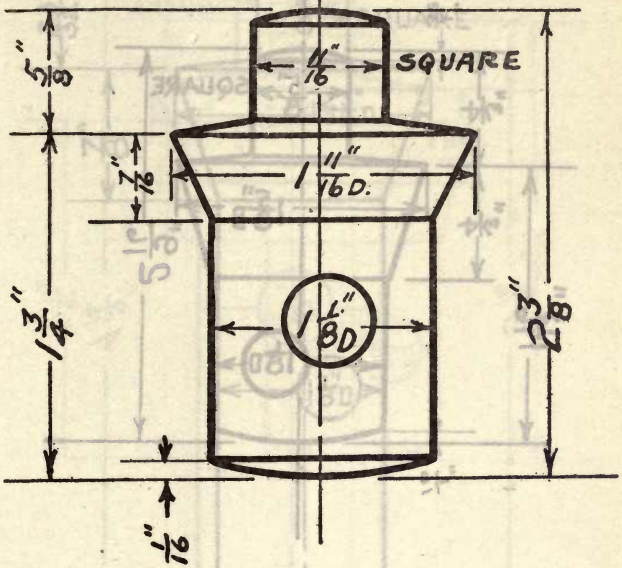

RIVET, TAP, 1 1/8″

Length, 1 3/4″

Weight (steel), 0.66 lb.

Die number, 1440-Y
Former die number, (314)

NOT STANDARD STOCK

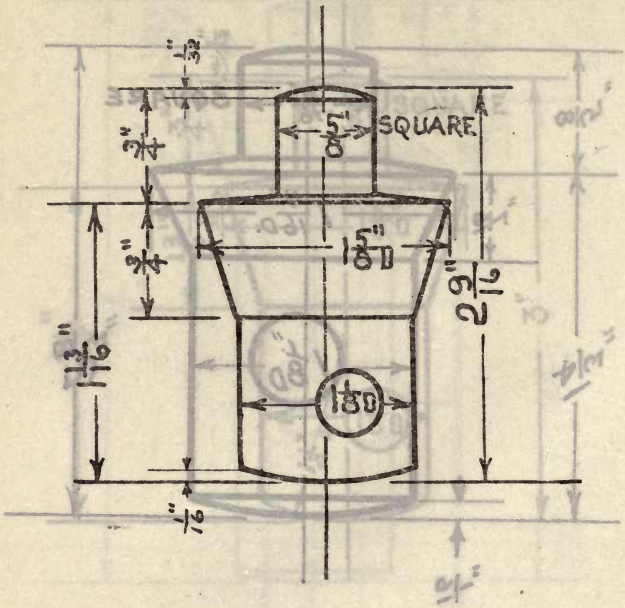

RIVET, TAP, 1 1/8″

Length, 1 13/16″

Weight (steel), 0.72 lb.

Die number, 1441-Y
Former die number, (315)

NOT STANDARD STOCK

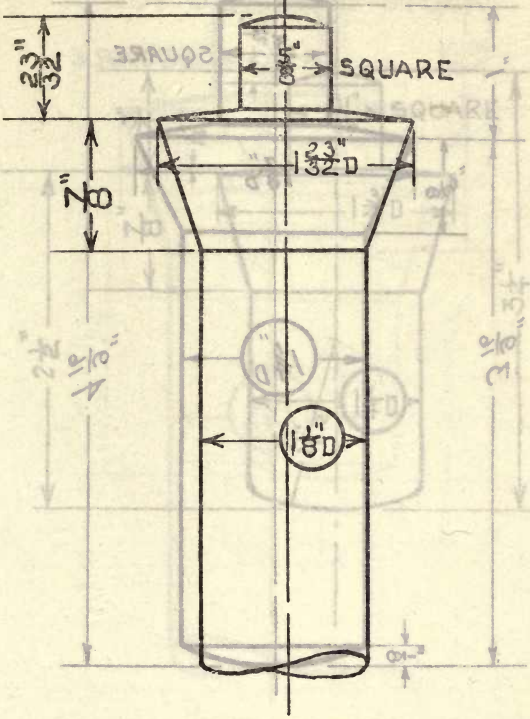

RIVET, TAP, 1 1/8″

Length, open die

Weight, lbs. **Die number, 1442-B**
Former die number, (376)

NOT STANDARD STOCK

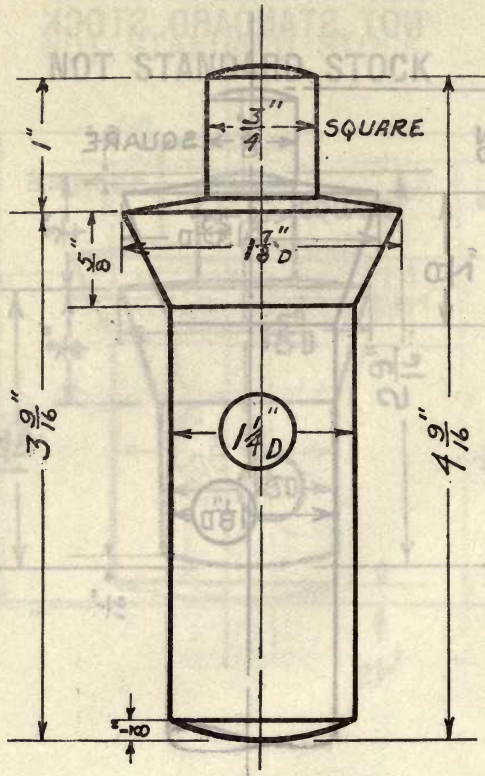

RIVET, TAP, 1 1/4″

Length, 3 9/16″

Weight, lbs. **Die number, 1443-Y**
Former die number, (334)

NOT STANDARD STOCK

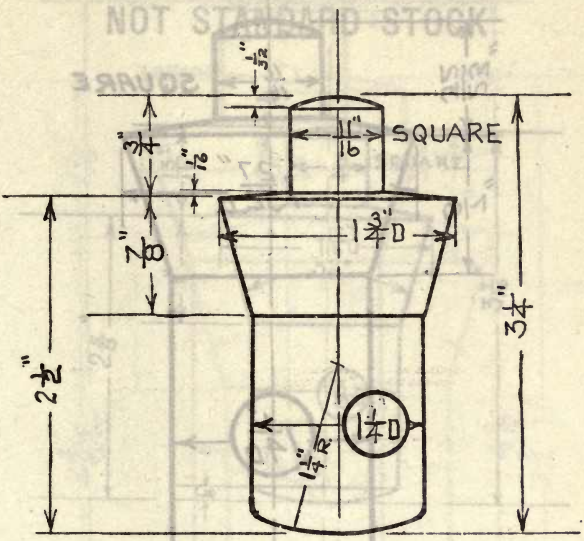

RIVET, TAP, 1 1/4″

Length, 2 1/2″

Weight (steel), 1.2 lbs.

Die number, 1444-Y
Former die number, (326)

NOT STANDARD STOCK

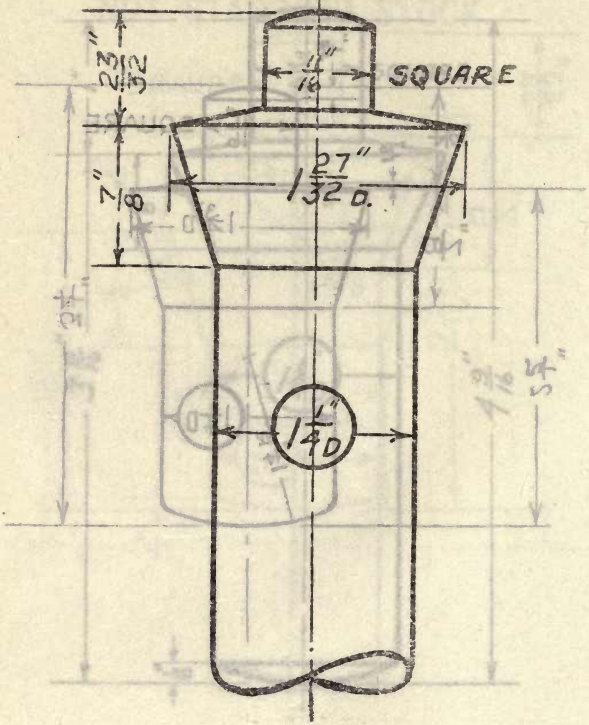

RIVET, TAP, 1 1/4″

Length, open die

Weight, lbs. **Die number, 1445-B**
Former die number, (376)

NOT STANDARD STOCK

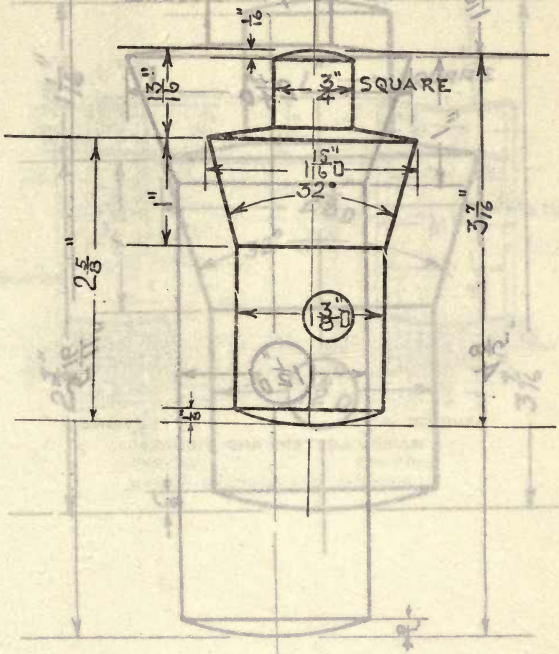

RIVET, TAP, 1 3/8″

Length, 2 5/8″

Weight (steel), lbs. **Die number, 1446-Y**
Former die number, (332)

NOT STANDARD STOCK

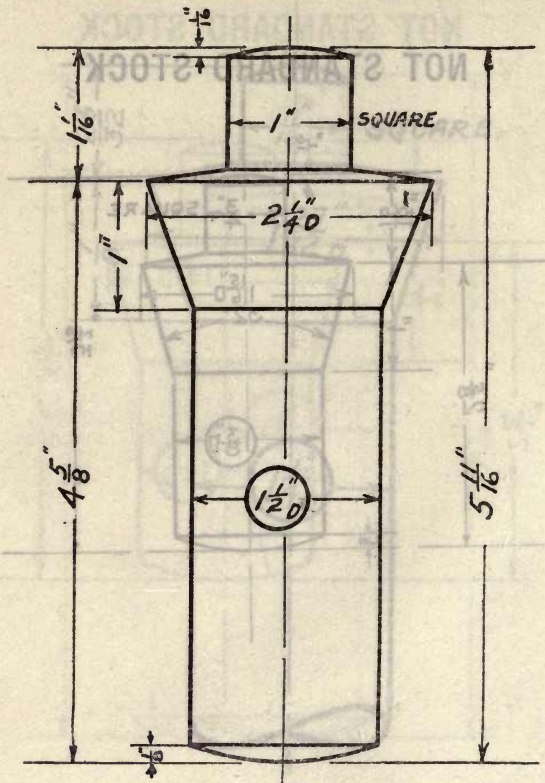

RIVET, TAP, 1 1/2″

Length, 4 5/8″

Weight (steel), 2.8 lbs. **Die number, 1447-Y**
Former die number, (324)

NOT STANDARD STOCK

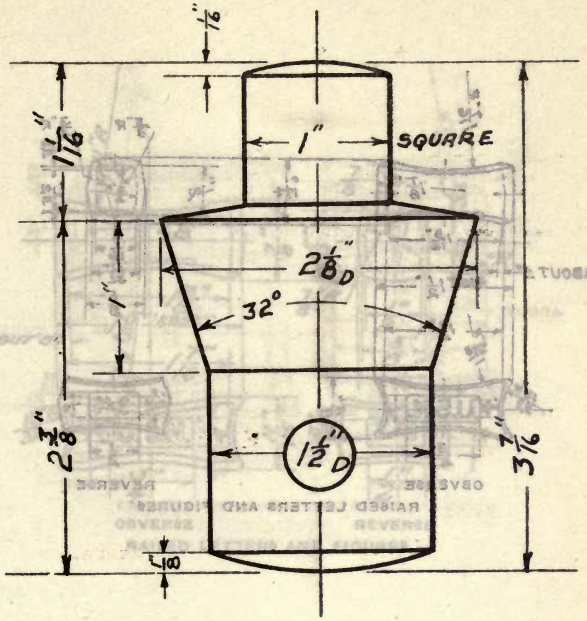

RIVET, TAP, 1 1/2″

Length, 2 3/8″

(Weight (steel), 1.8 lbs.

Die number, 1448-Y
Former die number, (333)

NOT STANDARD STOCK

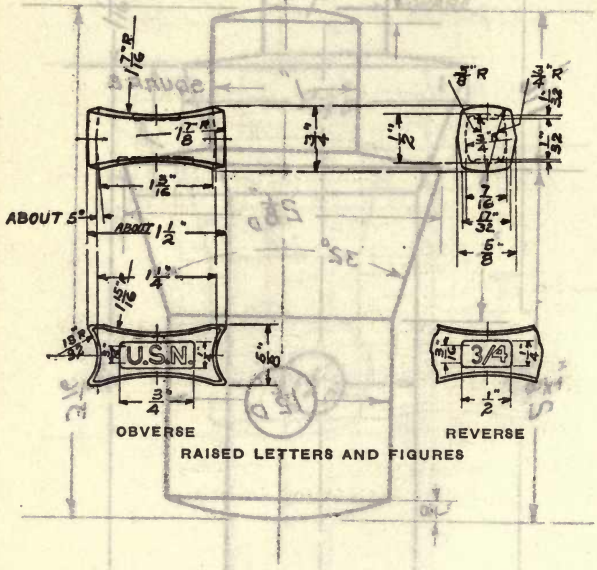

STUD, CHAIN, 3/4″

Weight (steel), lbs. **Die number, 1449-BY**
Former die number, (267)

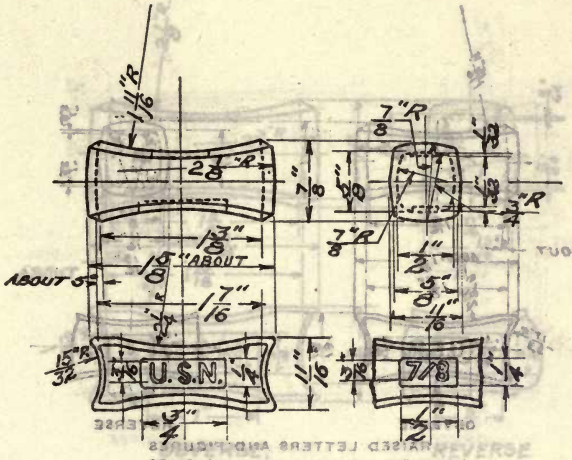

OBVERSE REVERSE

RAISED LETTERS AND FIGURES

STUD, CHAIN, 7/8″

Weight (steel), lbs. **Die number, 1450-B**

Former die number, (266)

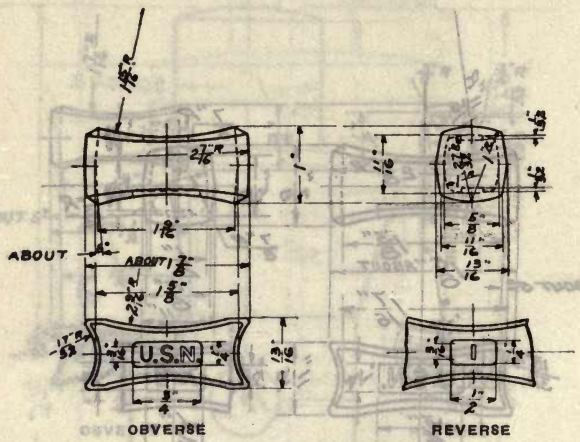

STUD, CHAIN, 1″

Weight (steel), lbs. **Die number, 1451-B**
Former die number, (268)

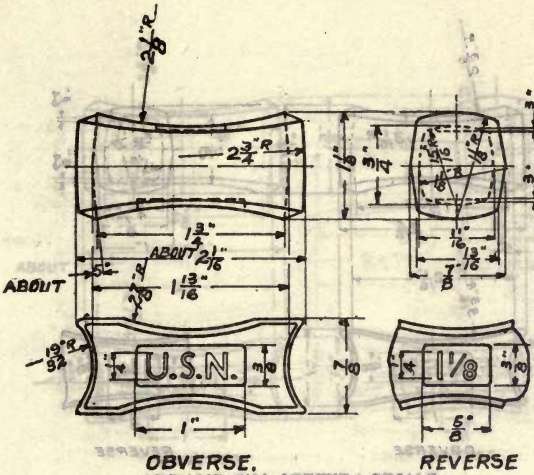

RAISED LETTERS AND FIGURES

STUD, CHAIN, 1 1/8″

Weight (steel), lbs.

Die number, 1452-B
Former die number, (269)

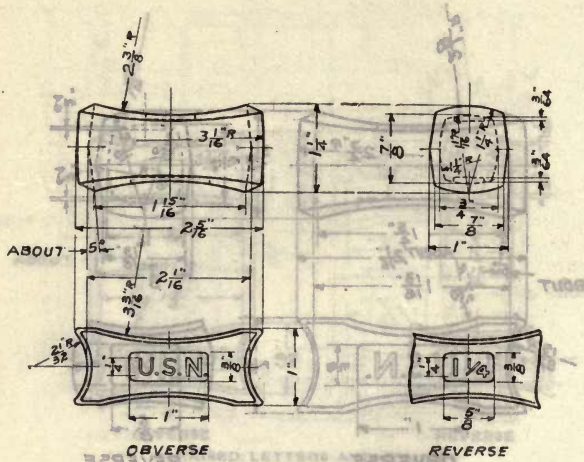

RAISED LETTERS AND FIGURES

STUD, CHAIN, 1 1/4″

Weight (steel), lbs. **Die number, 1453-B**
Former die number, (270)

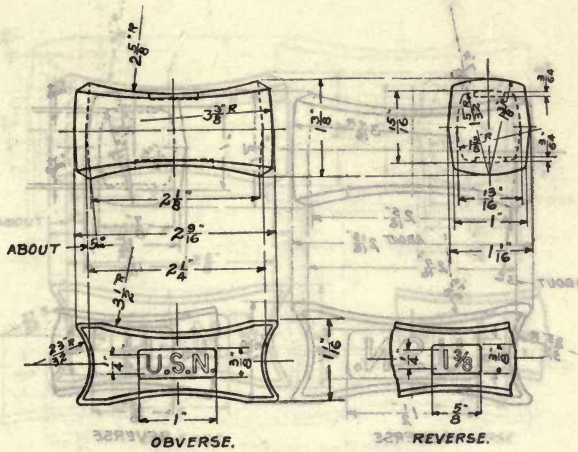

RAISED LETTERS AND FIGURES

STUD, CHAIN, 1 3/8″

Weight (steel), lbs. **Die number, 1454-B**
Former die number, (271)

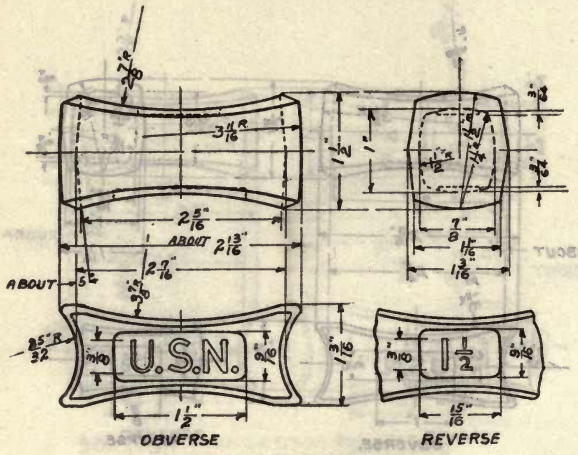

STUD, CHAIN, 1 1/2″

Weight (steel), lbs.

Die number, 1455-BY
Former die number, (272)

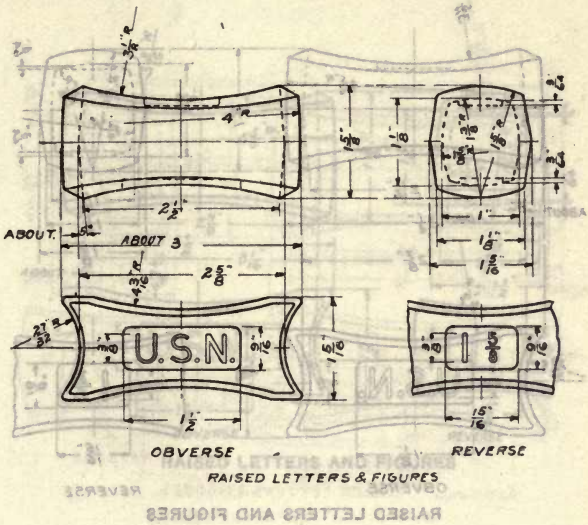

STUD, CHAIN, 1 5/8"

Weight (steel), lbs. **Die number, 1456-B**
Former die number, (273)

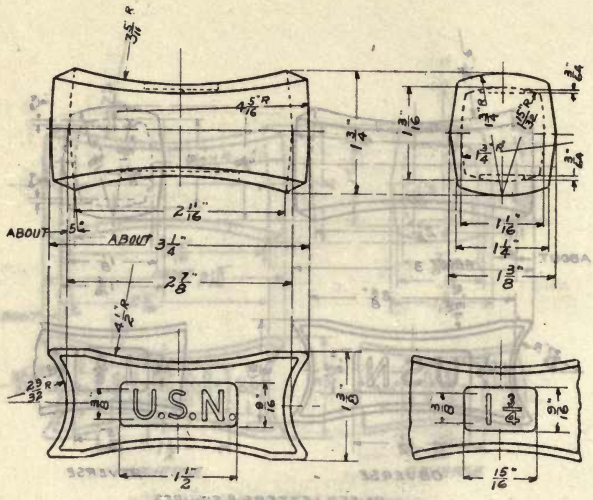

RAISED LETTERS AND FIGURES

STUD, CHAIN, 1 3/4″

Weight (steel), lbs. **Die number, 1457-B**
Former die number, (274)

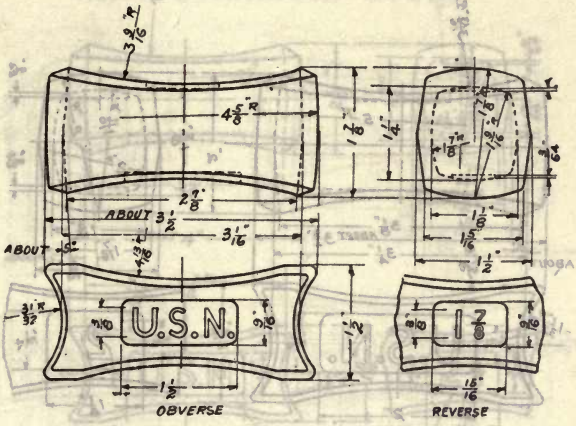

RAISED LETTERS AND FIGURES

STUD, CHAIN, 1 7/8″

Weight (steel), lbs. **Die number, 1458-B**
Former die number, (275)

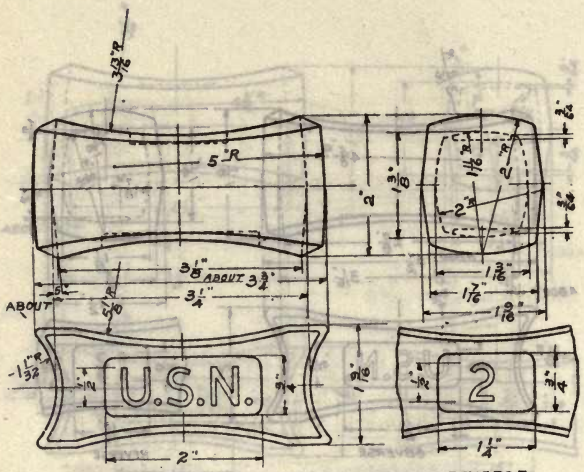

STUD, CHAIN, 2″

Weight (steel), lbs. **Die number, 1459-BY**
Former die number, (276)

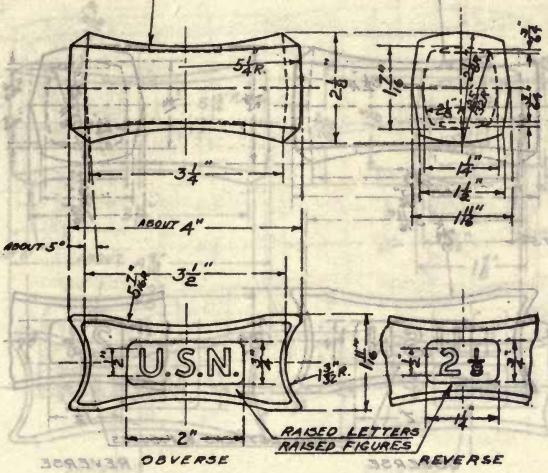

STUD, CHAIN, 2 1/8"

Weight (steel), lbs. **Die number, 1460-B**
Former die number, (277)

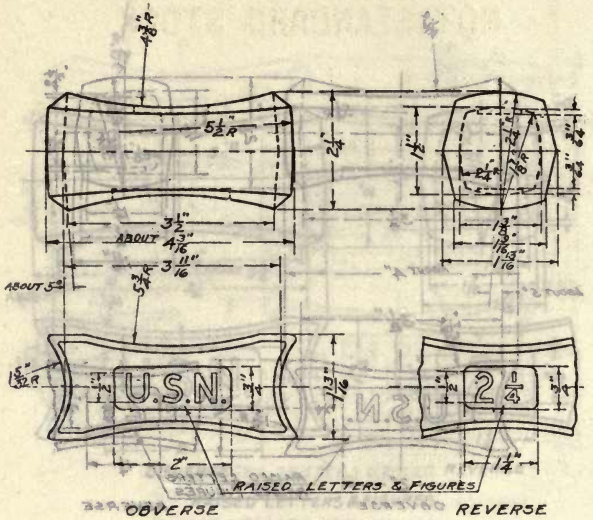

STUD, CHAIN, 2 1/4"

Weight (steel), lbs. **Die number,** 1461-B
Former die number, (278)

NOT STANDARD STOCK

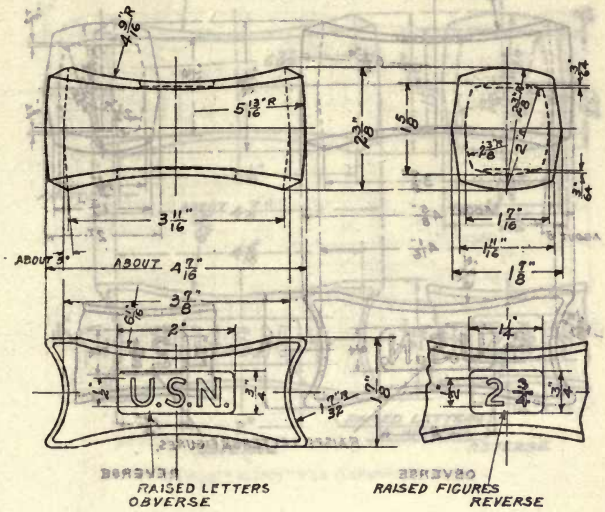

STUD, CHAIN, 2 3/8″

Weight (steel), lbs. **Die number, 1462-B**
Former die number, (279)

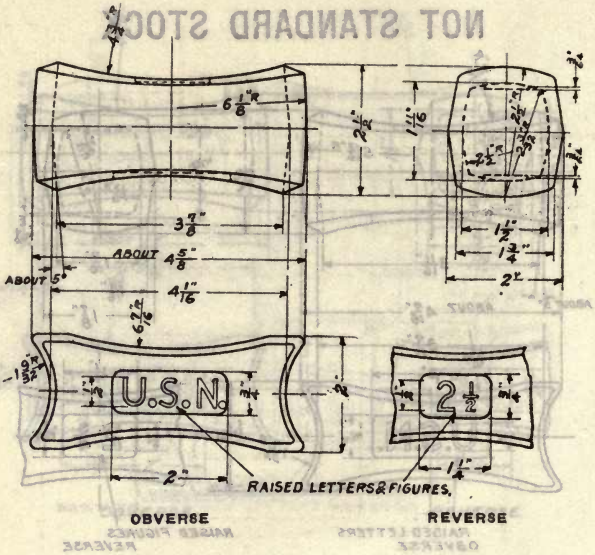

STUD, CHAIN, 2 1/2″

Weight (steel), lbs. **Die number, 1463-B.**
Former die number, (280)

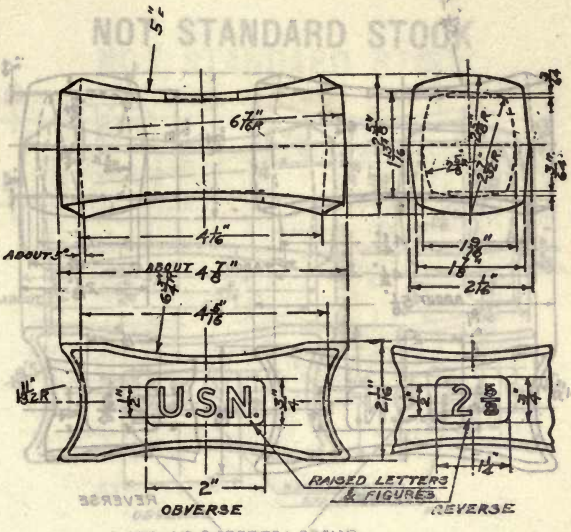

STUD, CHAIN, 2 5/8″

Weight (steel), ____ lbs. Die number, 1464-B
Former die number, (281)

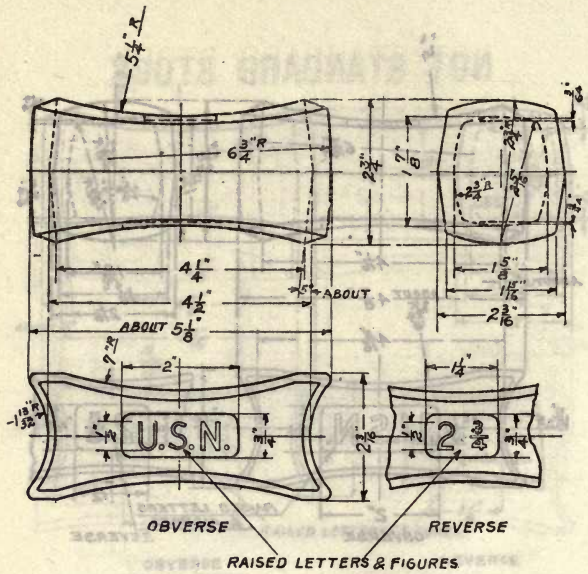

STUD, CHAIN, 2 3/4″

Weight (steel), lbs.

Die number, 1465-B
Former die number, (282)

NOT STANDARD STOCK

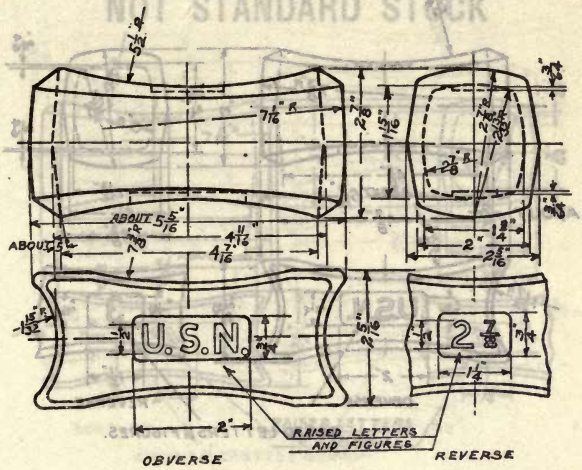

STUD, CHAIN, 2 7/8″

Weight (steel), lbs. **Die number, 1466-B**
Former die number, (283)

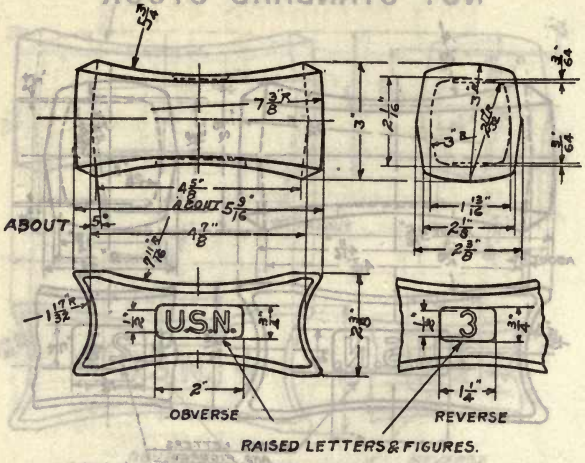

STUD, CHAIN, 3″

Weight (steel), lbs. **Die number, 1467-B**
Former die number, (284)

NOT STANDARD STOCK

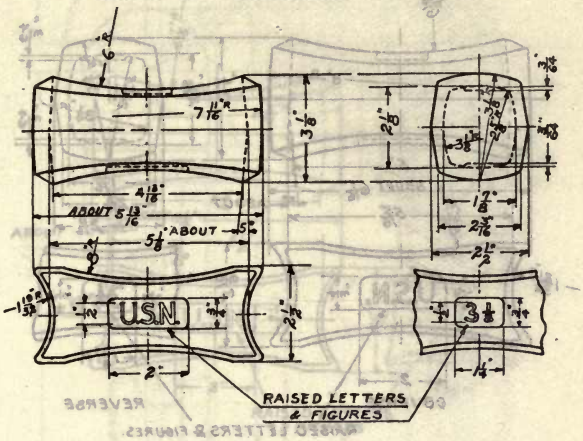

STUD, CHAIN, 3 1/8″

Weight (steel), lbs. **Die number, 1468-B**
Former die number, (285)

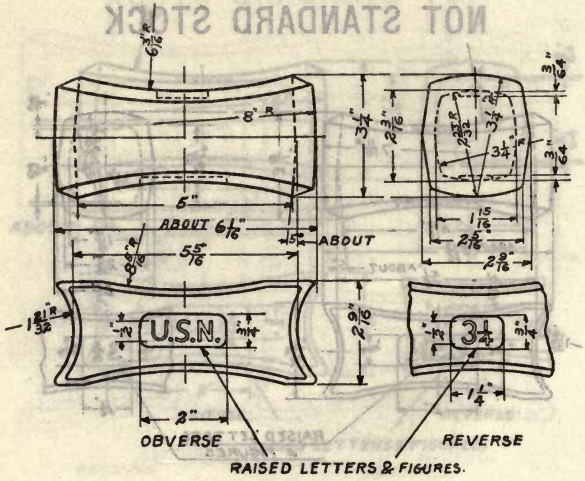

STUD, CHAIN, 3 1/4″

Weight (steel), lbs.

Die number, 1469-B
Former die number, (286)

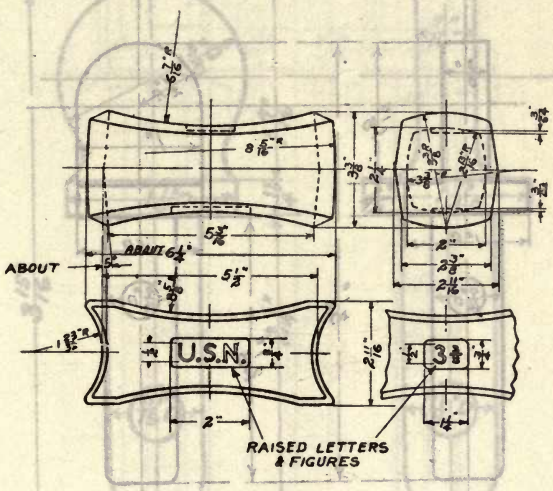

STUD, CHAIN, 3 3/8″

Weight (steel), lbs. **Die number, 1470-B**
Former die number, (287)

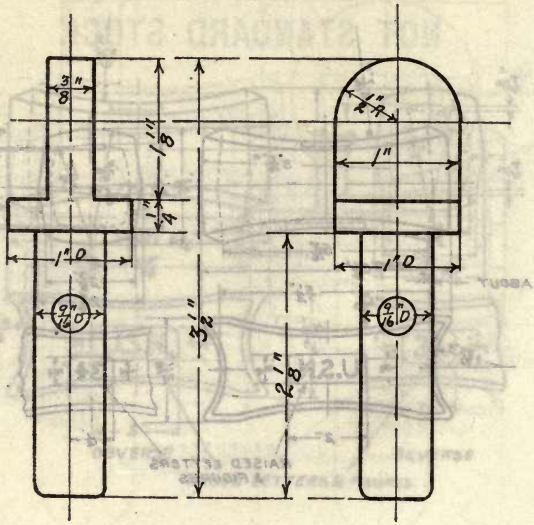

GOOSENECK, MALE, 9/16″

Weight, lbs.

Die number, 1471-M
Former die number, (3-44)

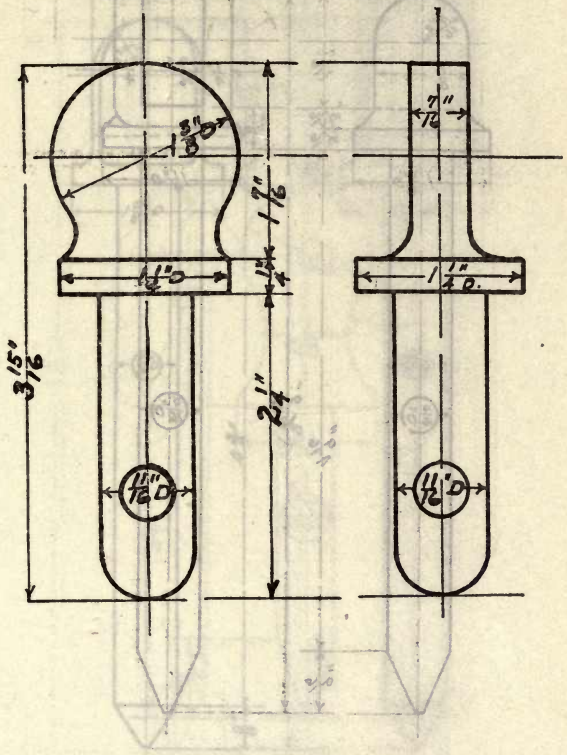

GOOSENECK, MALE, 11/16″

Weight (steel), 0.38 lb.

Die number, 1472-P
Former die number, (258)

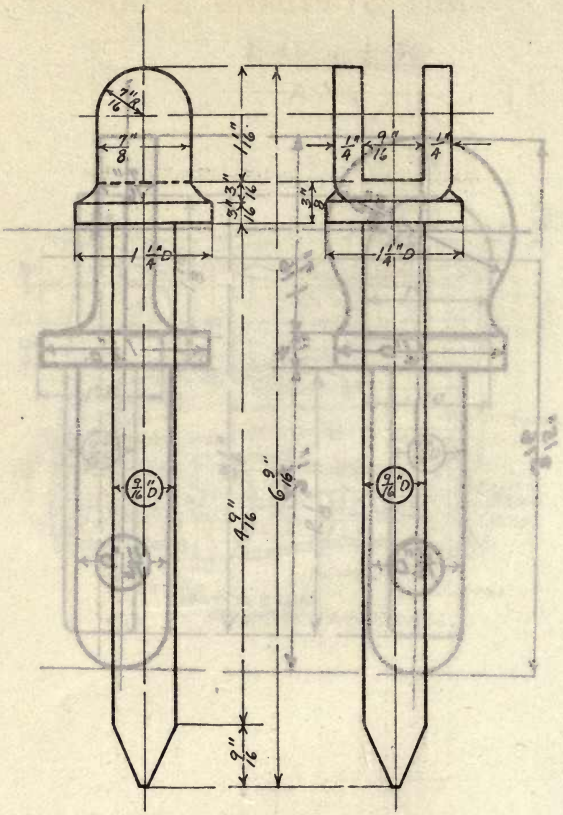

GOOSENECK, FEMALE, 9/16″

Weight (steel), 0.63 lb. **Die number, 1473-P.**
Former die number, (390)

NOT STANDARD STOCK

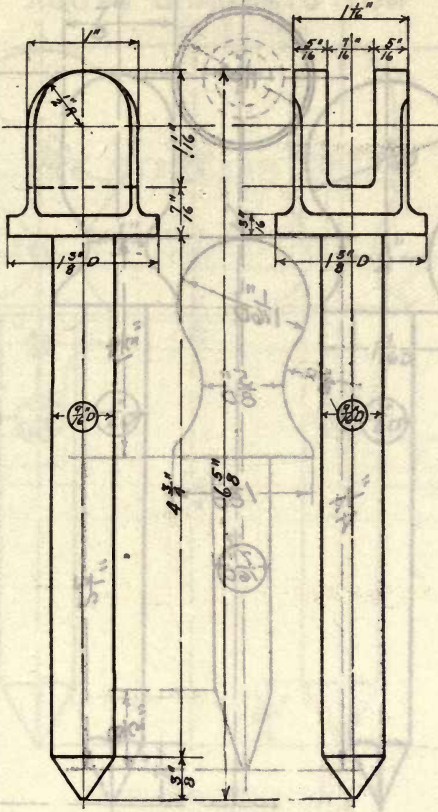

GOOSENECK, FEMALE, 9/16″

Weight, lbs. **Die number, 1474-M**
Former die number, (3-45)

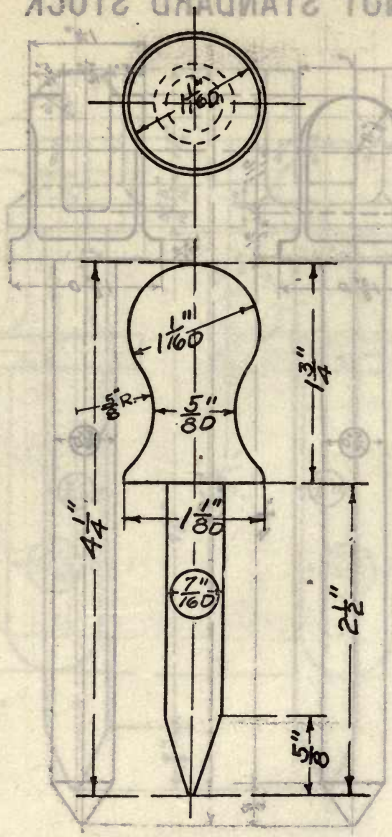

PIN, ROD, JACK, 7/16″

Weight (steel), 0.4 lb. **Die number, 1475-Y**
Former die number, (290)

NOT STANDARD STOCK

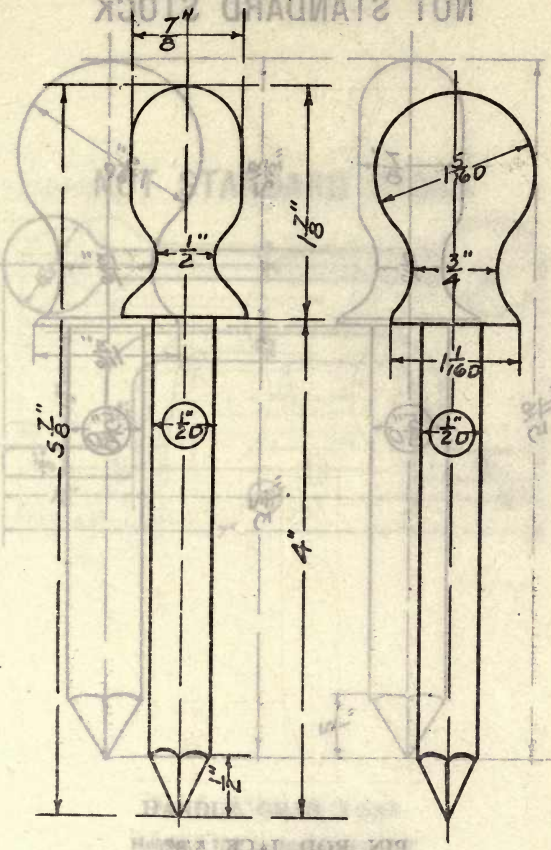

PIN, ROD, JACK, 1/2″

Weight (steel), 0.50 lb.

Die number, 1476-B
Former die number, (23)

NOT STANDARD STOCK

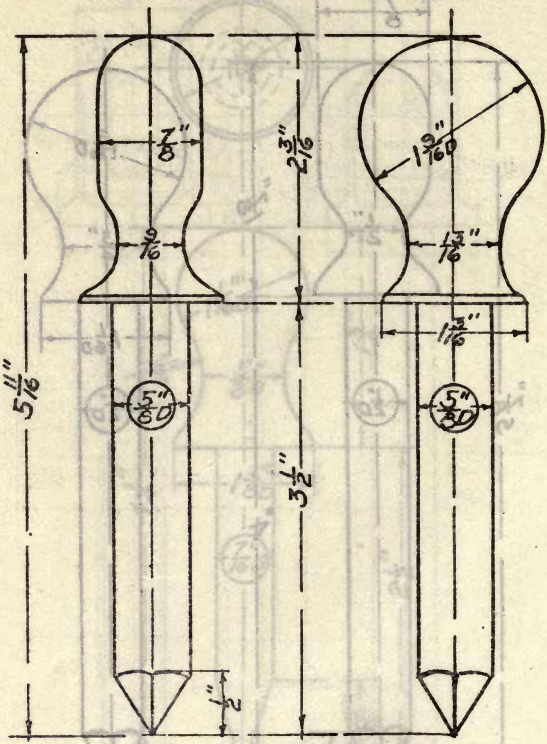

PIN, ROD, JACK, 5/8″

Weight (steel), 0.70 lb.

Die number, 1477-B
Former die number, (8)

NOT STANDARD STOCK

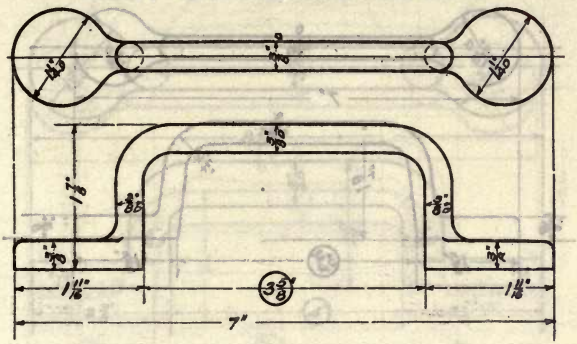

HANDLE, GRAB, 3 5/8″

Height, 1 7/8″ **Size of wire, 3/8″**

Weight (steel), 0.38 lb. **Die number, 1478-N**
Former die number, (3-2)

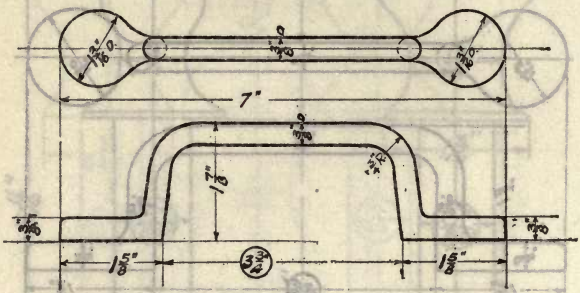

HANDLE, GRAB, 3 3/4″

Height, 1 7/8″ Size of wire, 3/8″

Weight (steel), 0.50 lb. Die number, 1479-YB
Former die numbers, (112) (333)

NOT STANDARD STOCK

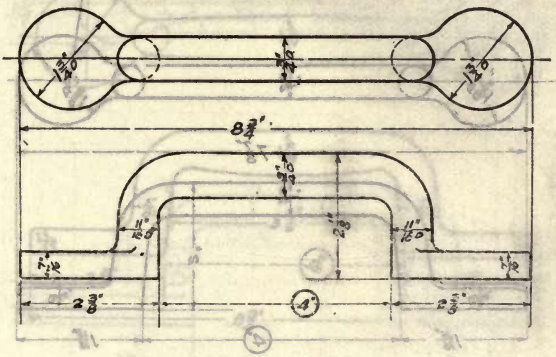

HANDLE, GRAB, 4″

Height, 2 1/8″ Size of wire, 3/4″

Weight, lbs. Die number, 1480-P
Former die number, (236)

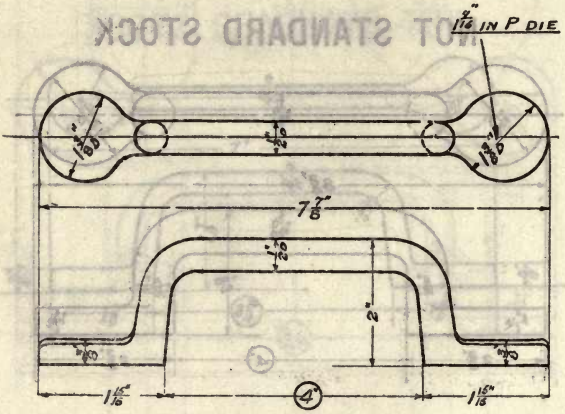

HANDLE, GRAB, 4″

Height, 2″ **Size of wire, 1/2″**

Weight (steel), 1.3 lbs. **Die number, 1481-MP**
Former die numbers, (3-2) (232)

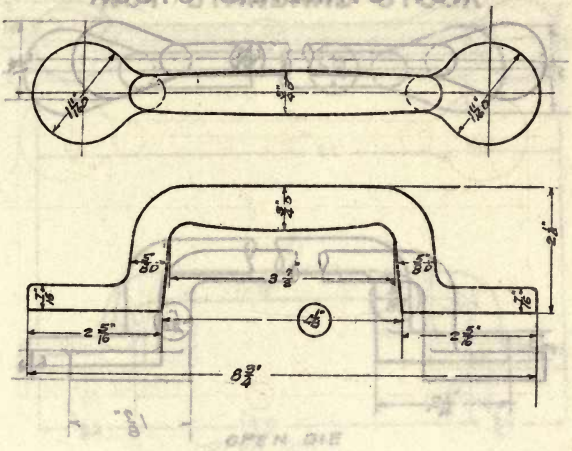

HANDLE, GRAB, 4 1/8″

Height, 2 1/8″ **Size of wire, 3/4″**

Weight (steel), 1.4 lbs. **Die number, 1482-N**
Former die number, (3-1)

NOT STANDARD STOCK

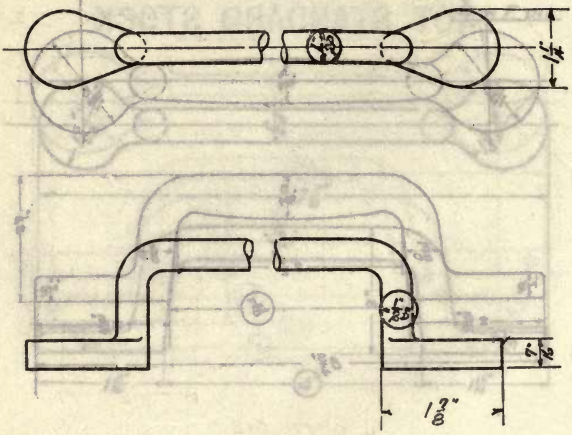

OPEN DIE

GRAB ROD, 1/2"

Weight, lbs. **Die number, 1483-N**
Former die number, (3-29)

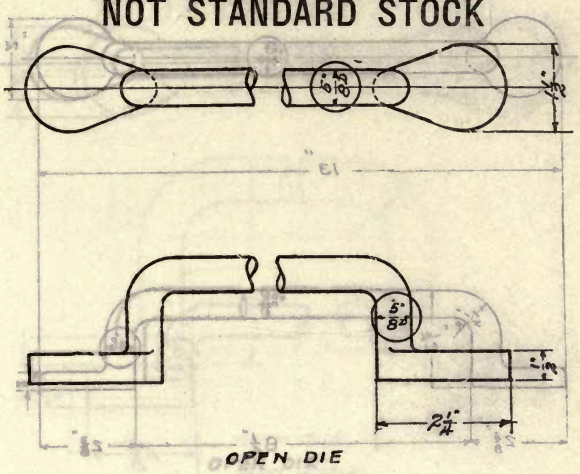

GRAB ROD, 5/8"

Weight, lbs. **Die number, 1484-N**
Former die number, (3-30)

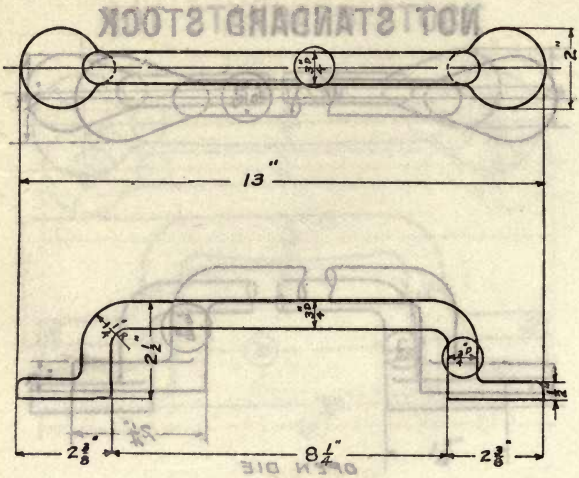

GRAB ROD, 3/4″

Weight (steel), 2.3 lbs. Die number, 1485-Y
Former die number, (116)

NOT STANDARD STOCK

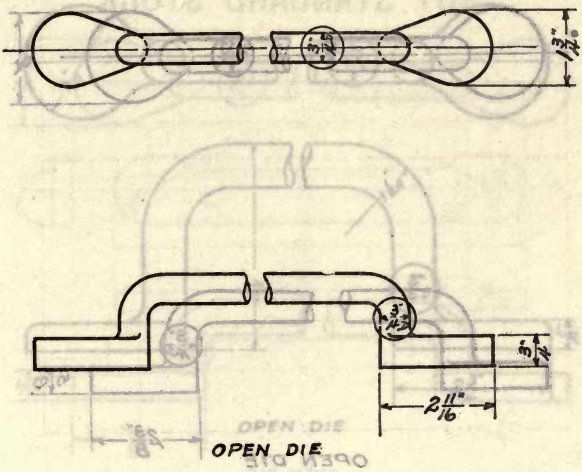

GRAB ROD, 3/4″

Weight, lbs.

Die number, 1486-N
Former die number, (3-31)

NOT STANDARD STOCK

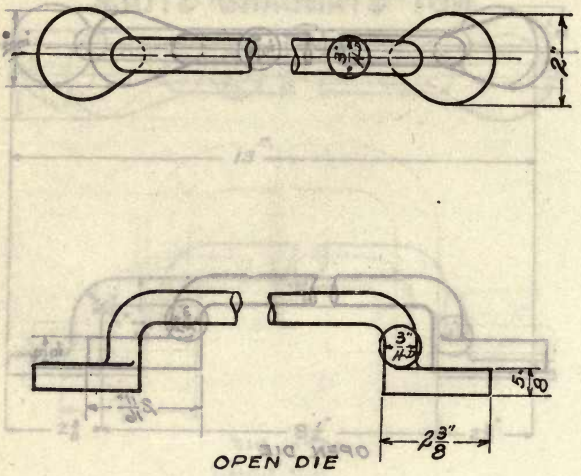

GRAB ROD, 3/4″

Weight, **lbs.** **Die number, 1487-B**
Former die number, (22)

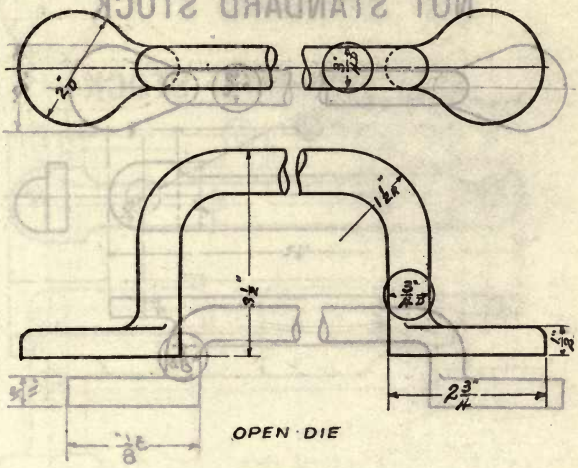

GRAB ROD, 3/4"

Weight, lbs. **Die number, 1488-Y**
Former die number, (117)

NOT STANDARD STOCK

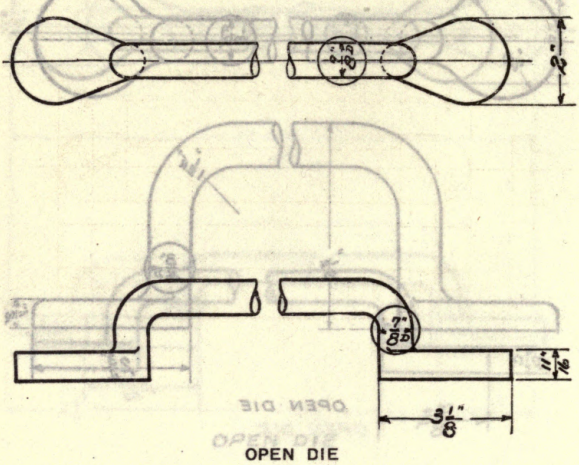

OPEN DIE

GRAB ROD, 7/8″

Weight, lbs. **Die number, 1489-N**
Former die number, (3-32)

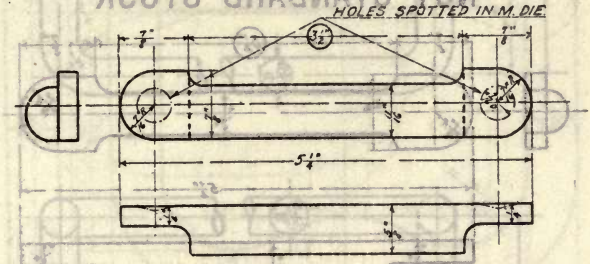

OPEN DIE

GRAB, STRAIGHT, 3 1/2″

Weight, lbs. **Die number, 1490-MY**
Former die numbers, (4-5) (119)

NOT STANDARD STOCK

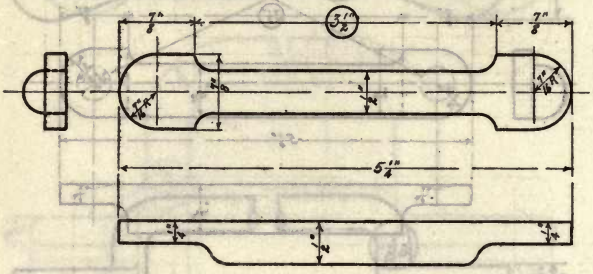

GRAB, STRAIGHT, 3 1/2″

Weight (n. brass), 0.38 lb. Die number, 1491-NB
Former die numbers, (4-5) (62)

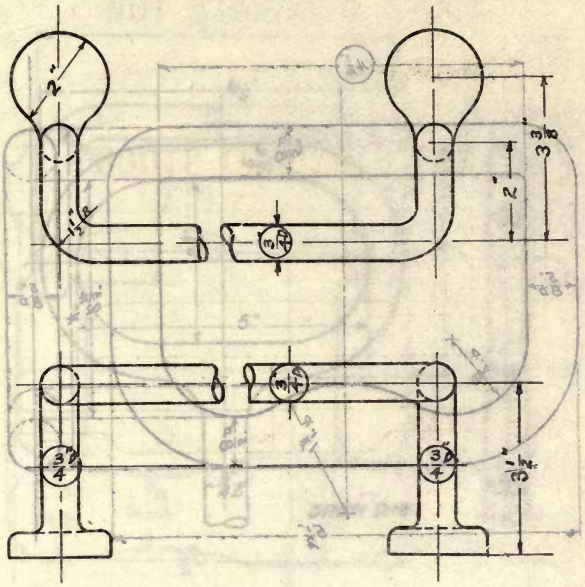

OPEN DIE

GRAB ROD, 3/4"

Weight, lbs. **Die number, 1492-X**
Former die number, (117-A)

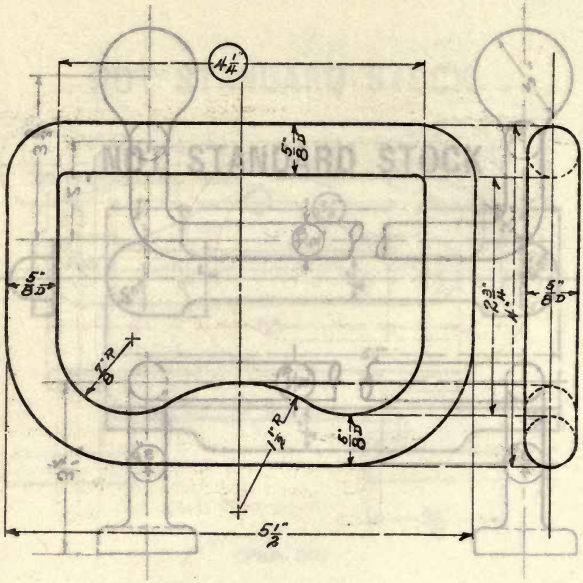

HANDLE, 4 1/4″

Weight (steel), 1.5 lbs. **Die number, 1493-N**
Former die number, (3-129)

NOT STANDARD STOCK

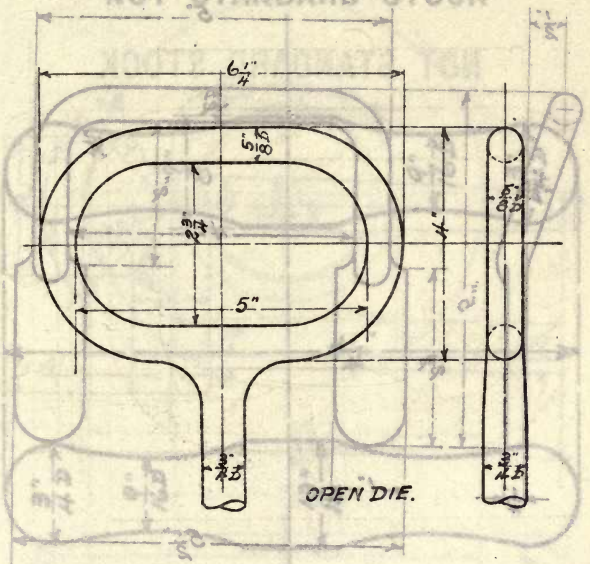

HANDLE, TOOL, FIRE

Weight, **lbs.** **Die number, 1494-MY**
Former die numbers, (12-8) (1057)

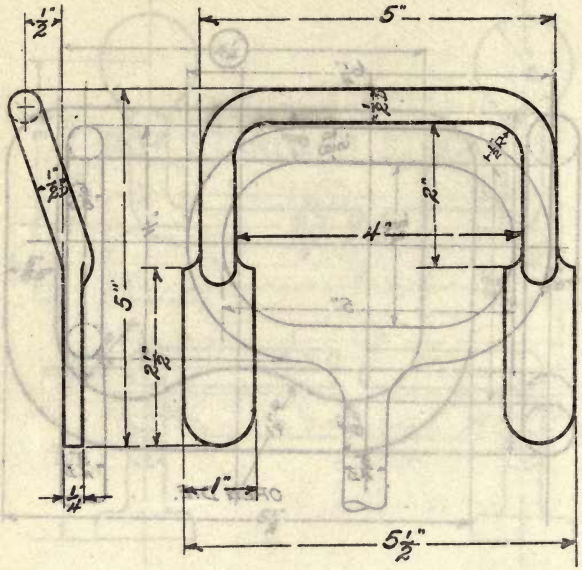

HANDLE, BUCKET, 4″

Weight, lbs. **Die number, 1495-Y.**
Former die number, (1137)

NOT STANDARD STOCK

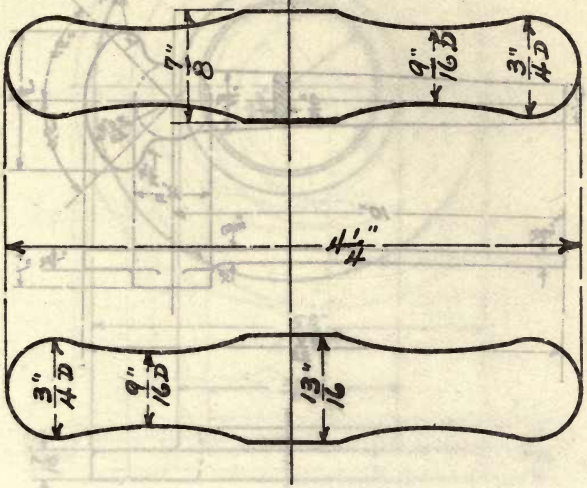

HANDLE, VALVE, AIR, H. P.

Weight (n. brass), 0.47 lb. Die number, 1496-Y
Former die number, (386)

NOT STANDARD STOCK

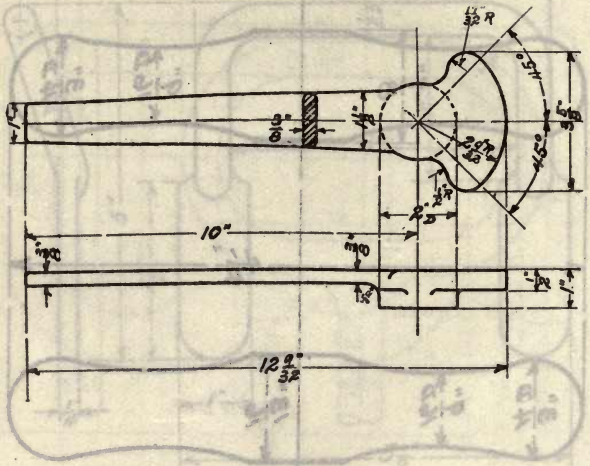

HANDLE, VALVE, BUTTERFLY

For ventilation pipe

Weight (steel), 2.3 lbs. **Die number, 1497-Y**
Former die number, (104)

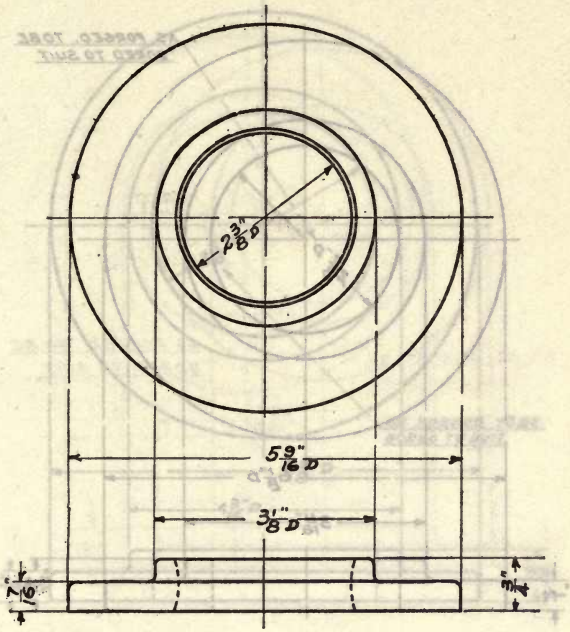

FLANGE, 2″

Weight, lbs. Die number, 1498-Y
Former die number (498)

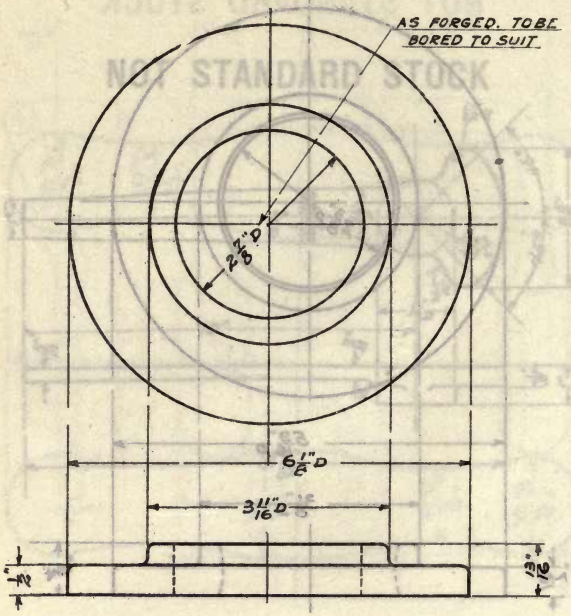

FLANGE, 2 1/2″

Weight, . **lbs.** **Die number, 1499-Y**
Former die number, (499)

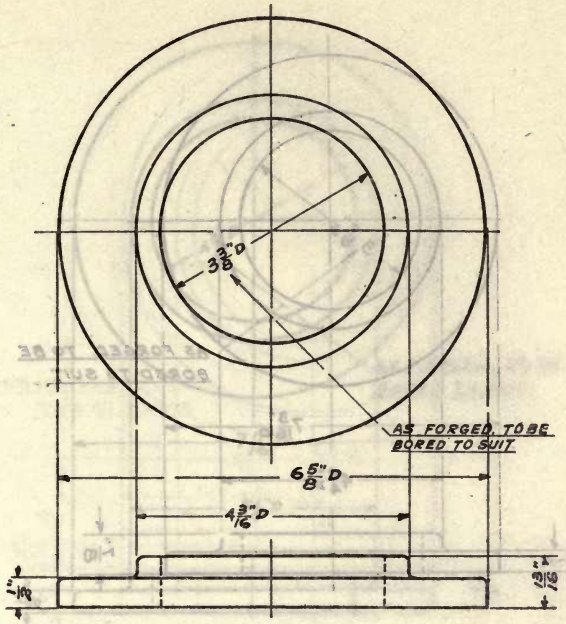

FLANGE, 3″

Weight, lbs. **Die number, 1500-Y**
Former die number, (500)

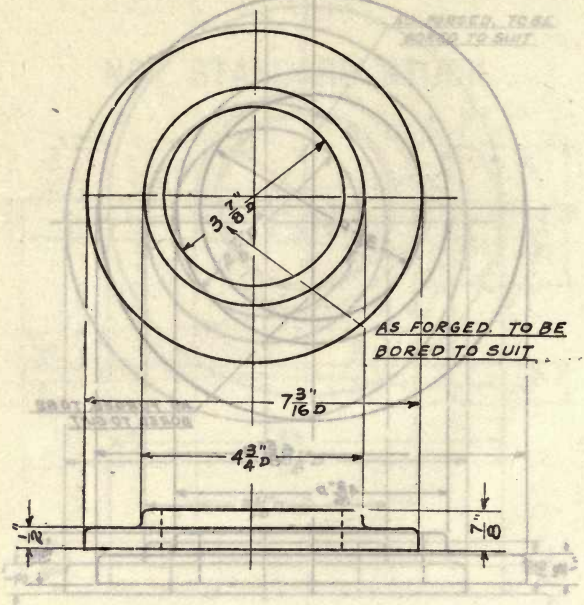

FLANGE, 3 1/2″

Weight, lbs. Die number, 1501-Y
Former die number, (501)

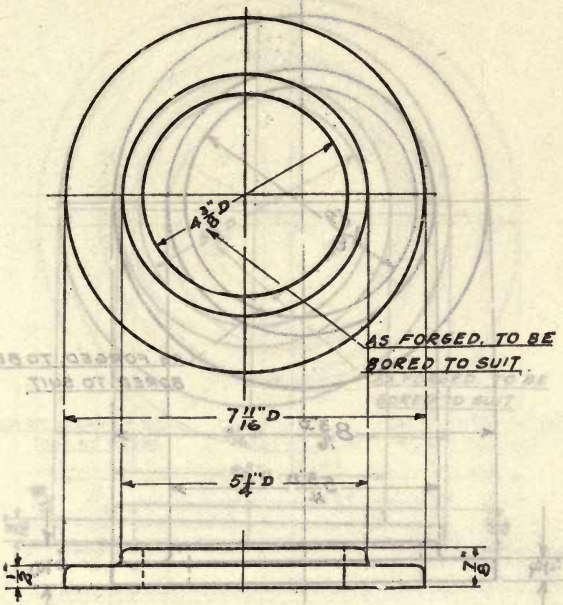

FLANGE, 4″

Weight, lbs. Die number, 1502-Y
Former die number, (502)

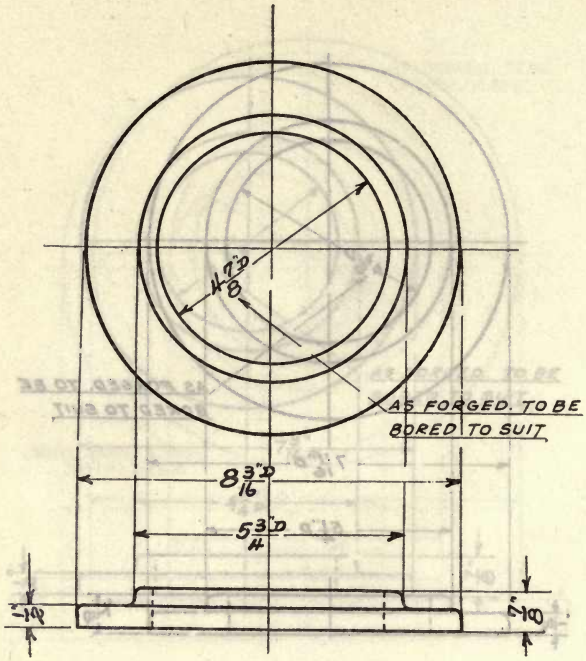

FLANGE, 4 1/2″

Weight, lbs. **Die number, 1503-Y**
Former die number, (503)

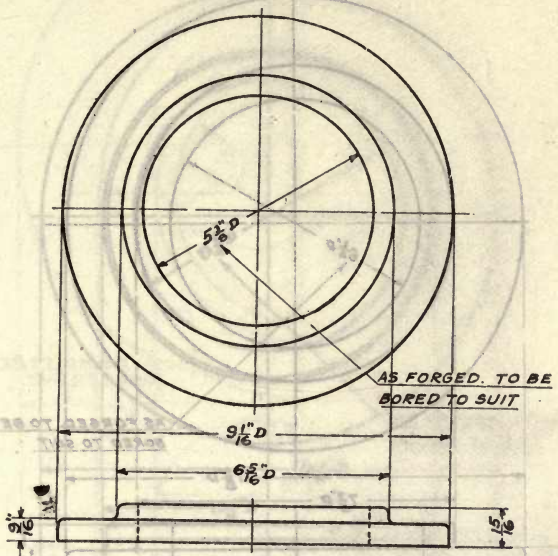

FLANGE, 5″

Weight, lbs. **Die number, 1504-Y**
Former die number, (504)

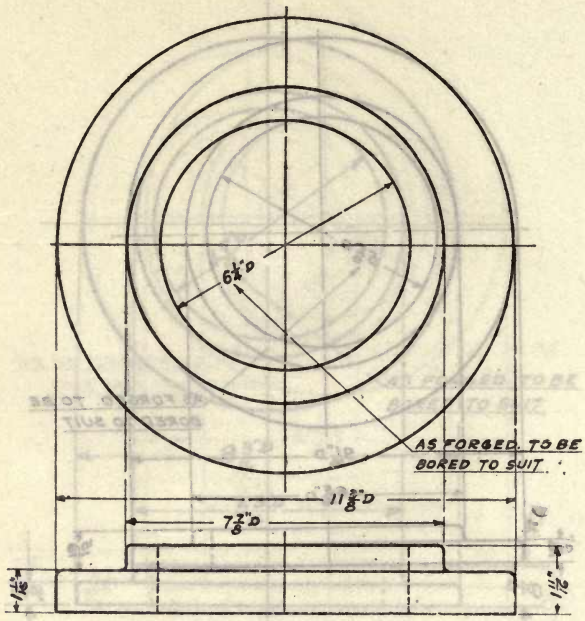

FLANGE, 6″

Weight, lbs. **Die number, 1505-Y**
Former die number, (506)

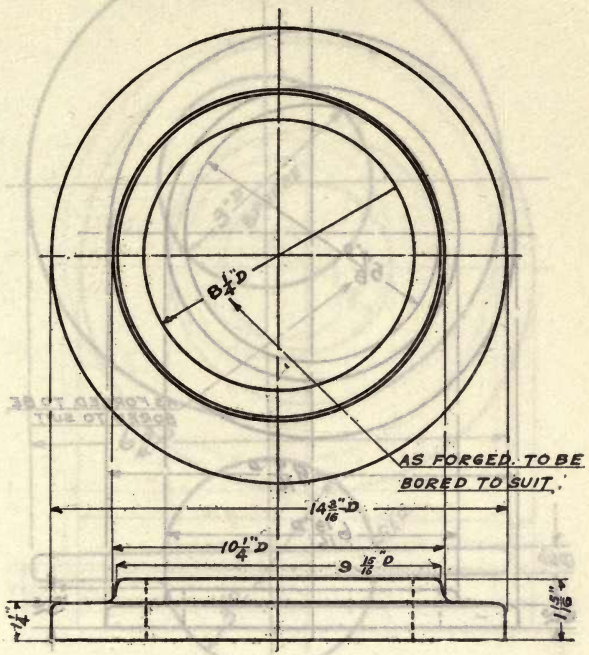

FLANGE, 8″

Weight, lbs. **Die number, 1506-Y**
Former die number, (507)

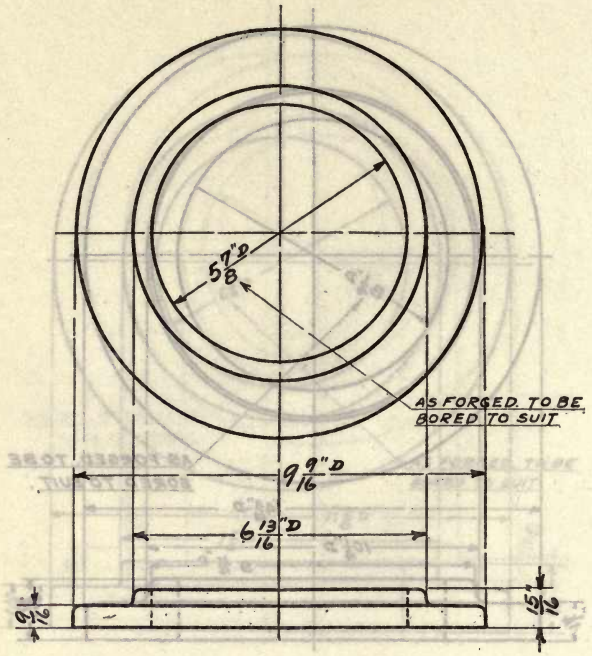

FLANGE, 5 1/2″

Weight, **lbs.** **Die number, 1507-Y**
Former die number, (505)

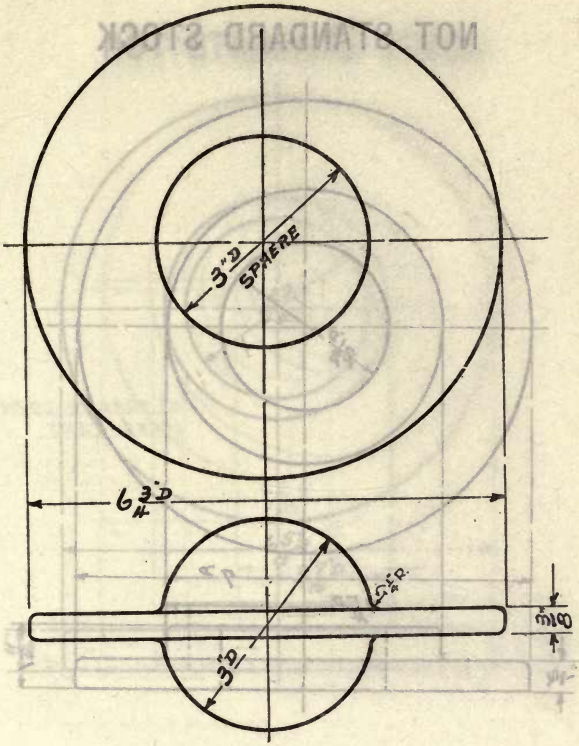

FLANGE, TUBE, SOUNDING, 1 1/2″ W. I. PIPE
FLANGE, TUBE, ESCAPE, AIR, 1 1/4″ W. I. PIPE

Weight (steel), 7.0 lbs. **Die number, 1508-Y**
Former die number, (100)

NOT STANDARD STOCK

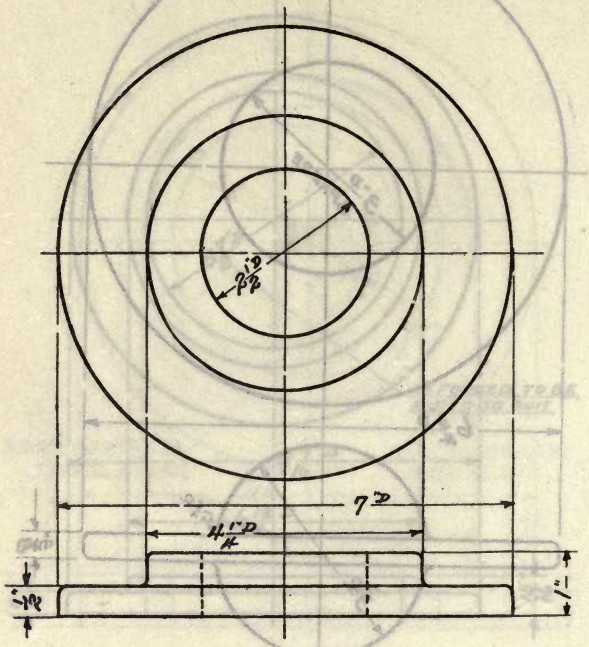

FLANGE, 2 1/2″—3″

Nonstandard

For standard flange see die numbers 1499-1500

Weight (steel), 4.3 lbs. **Die number, 1509-Y**
Former die number, (335)

NOT STANDARD STOCK

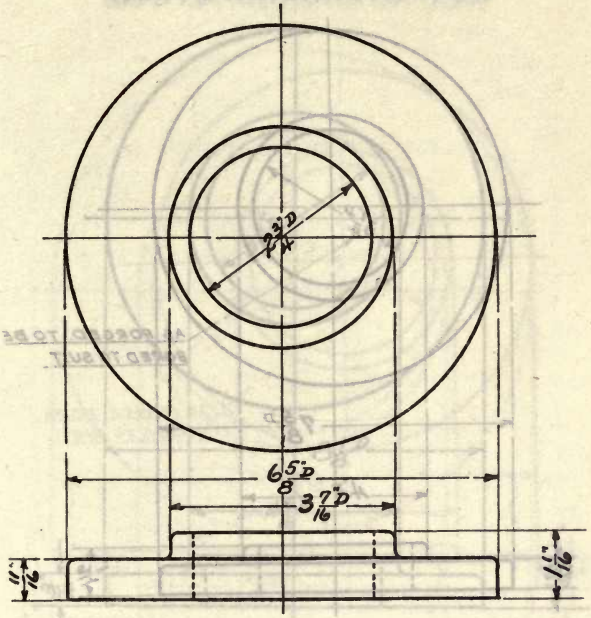

FLANGE, 2 1/2″

Nonstandard

For standard flange see die number 1499

Weight (steel), 6.0 lbs. **Die number, 1510-Y**
Former die number, (336)

NOT STANDARD STOCK

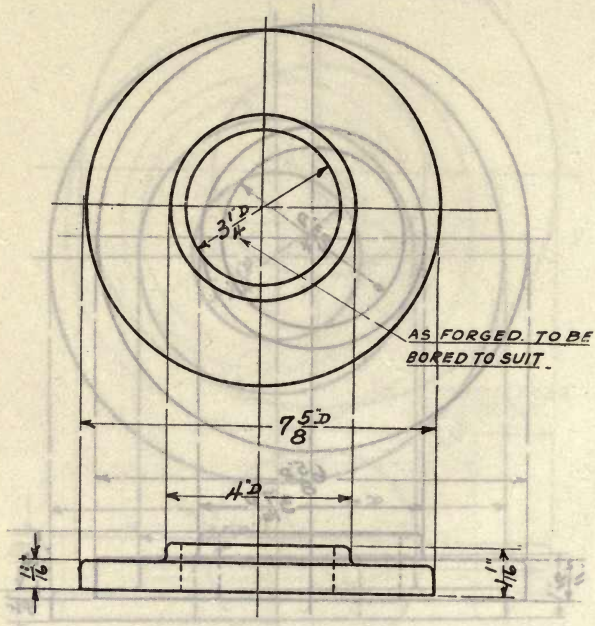

FLANGE, 3″

Nonstandard

For standard flange see die number 1500

Weight (steel), 7.5 lbs. Die number, 1511-YM
Former die numbers, (337) (445)

NOT STANDARD STOCK

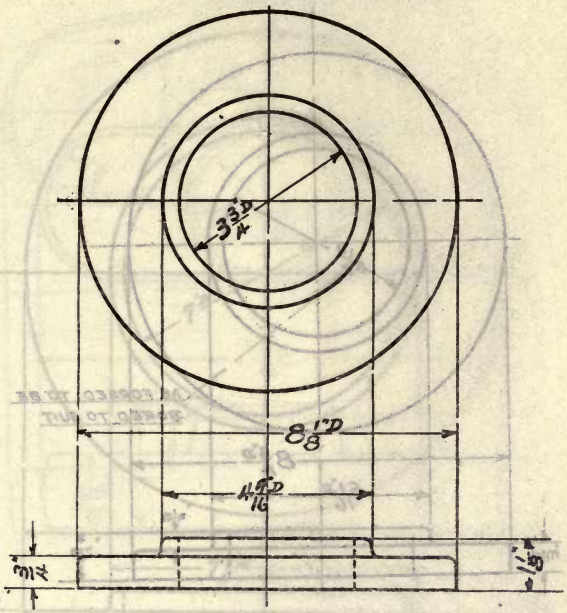

FLANGE, 3 1/2″

Nonstandard

For standard flange see die number 1501

Weight (steel), 8.0 lbs. **Die number, 1512-Y**
Former die number (338)

NOT STANDARD STOCK

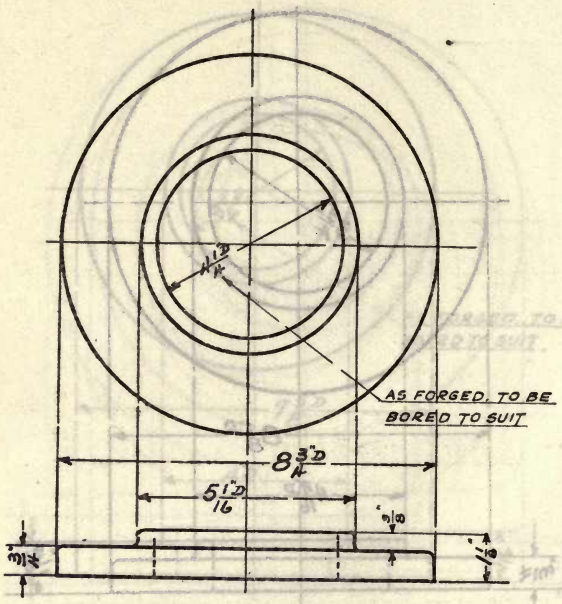

FLANGE, 4″

Nonstandard

For standard flange see die number 1502

Weight (steel) 9.5 lbs. **Die number, 1513-Y**
Former die number, (339)

NOT STANDARD STOCK

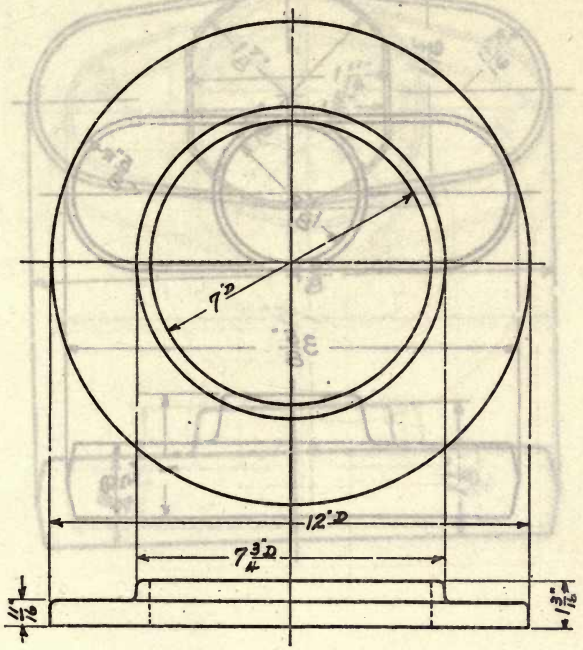

FLANGE, 6 1/2″

Nonstandard

Weight, **lbs.** **Die number, 1514-M**
Former die number, (4-50)

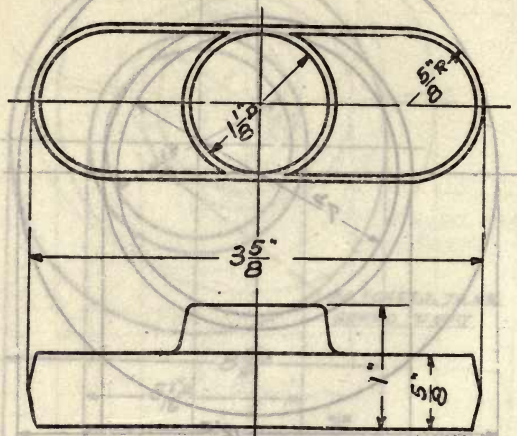

YOKE, VALVE, H. P., 1″ AND 1 1/4″

Weight (steel), 1.0 lb.

Die number, 1515-YM
Former die number (1059)

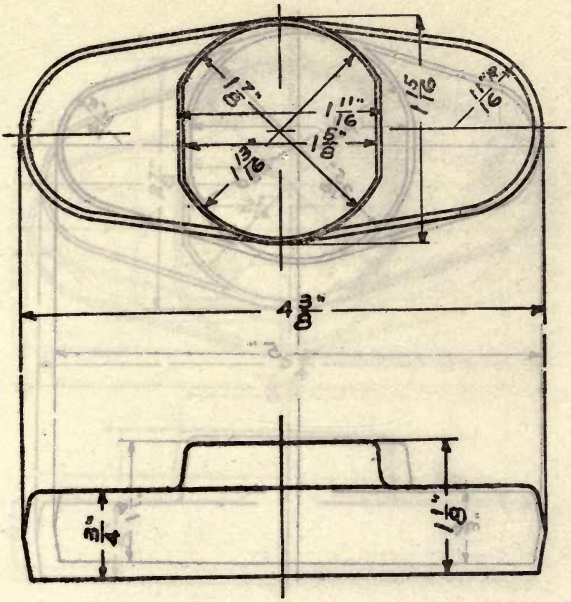

YOKE, VALVE, H. P., 1 1/2″ AND 2″

Weight (steel), 1.5 lbs. **Die number, 1516-YM**
Former die number, (1060)

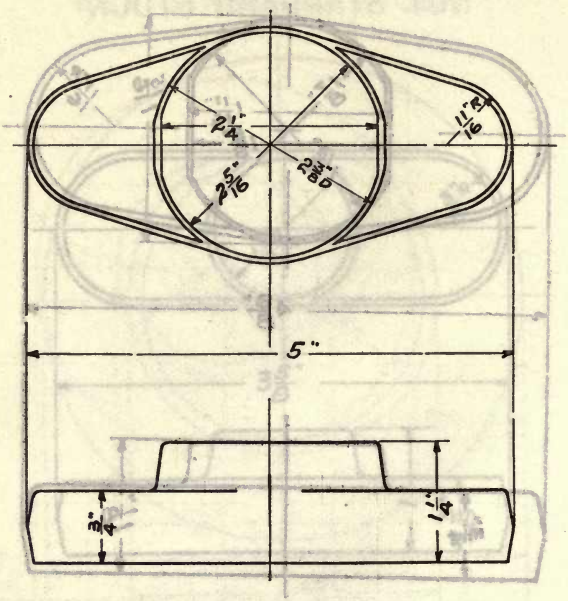

YOKE, VALVE, H. P., 2 1/2″

Weight (steel), 2.6 lbs. **Die number, 1517-Y**
Former die number, (1061)

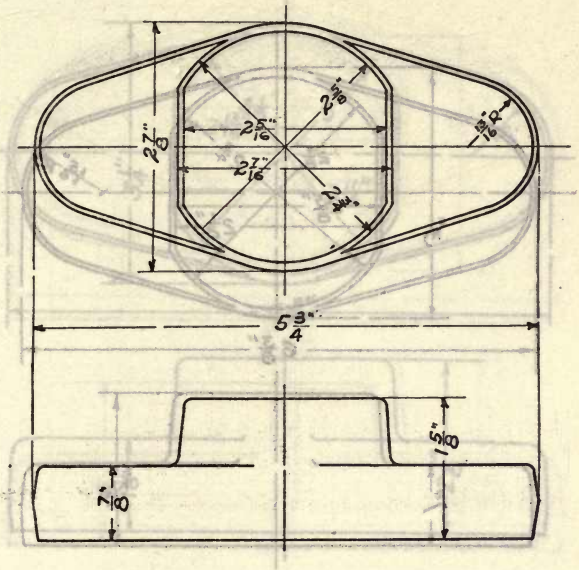

YOKE, VALVE, H. P., 3″ AND 3 1/2″

Weight (steel), 4.2 lbs.

Die number, 1518-YM
Former die number, (1062)

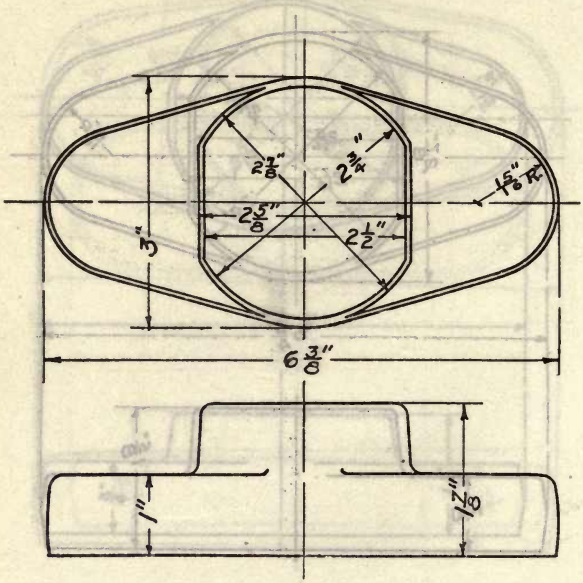

YOKE, VALVE, H. P., 4″

Weight (steel), 5.8 lbs. **Die number, 1519-Y**
Former die number, (1063)

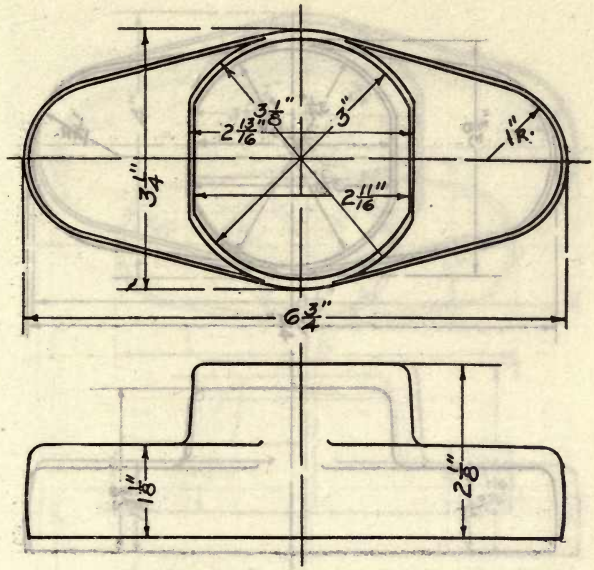

YOKE, VALVE, H. P., 4 1/2″

Weight (steel), 7.0 lbs. **Die number, 1520-Y**
Former die number, (1064)

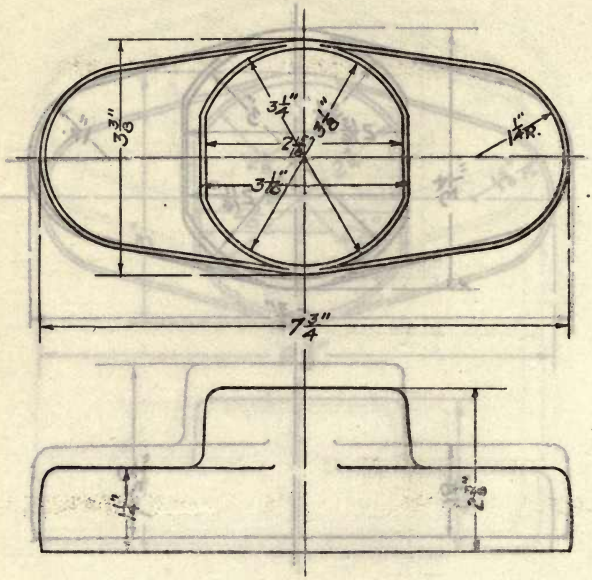

YOKE, VALVE, H. P., 5″ AND 5 1/2″

Weight (steel), 8.0 lbs. **Die number, 1521-Y**
Former die number, (1065)

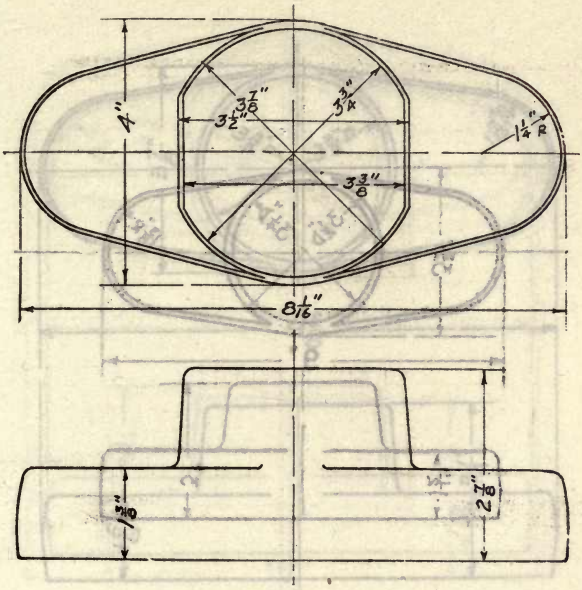

YOKE, VALVE, H. P., 6″ AND 6 1/2″

Weight (steel), 10.2 lbs. **Die number, 1522-Y**
Former die number, (1066)

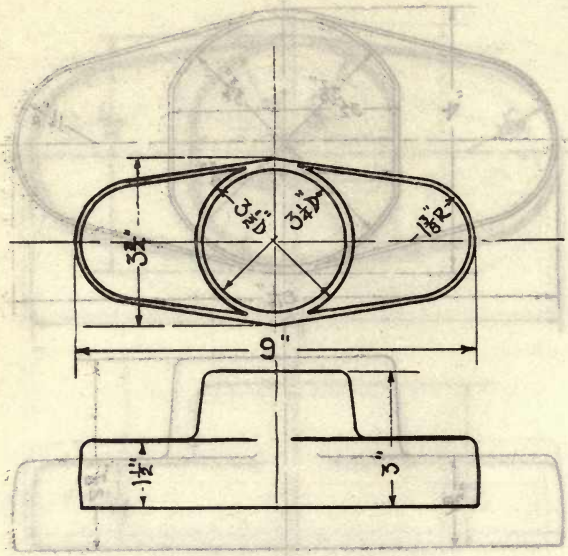

YOKE, VALVE, H. P., 7″

Weight (steel), 15.0 lbs. **Die number, 1523-Y**
Former die number, (1067)

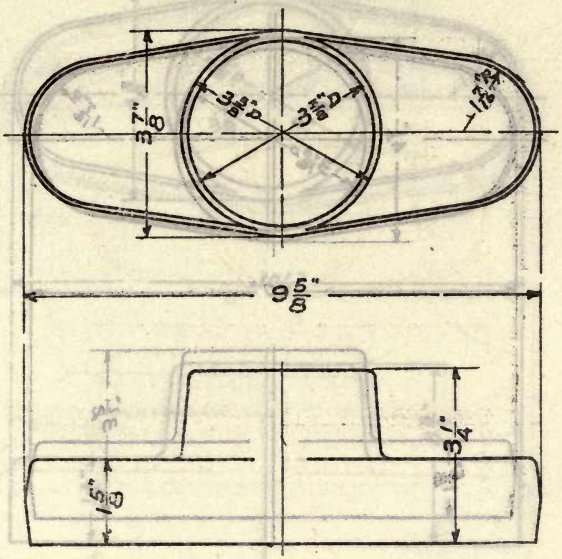

YOKE, VALVE, H. P., 7 1/2″

Weight (steel), 15.8 lbs.

Die number, 1524-Y
Former die number, (1068)

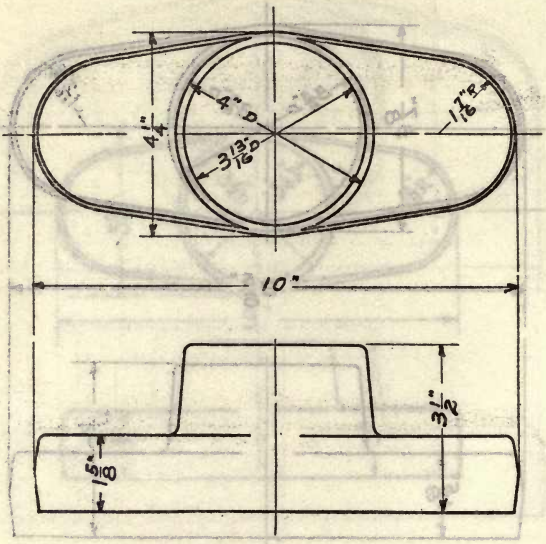

YOKE, VALVE, H. P., 8″

Weight (steel), 22.8 lbs. **Die number, 1525-Y**
Former die number, (1069)

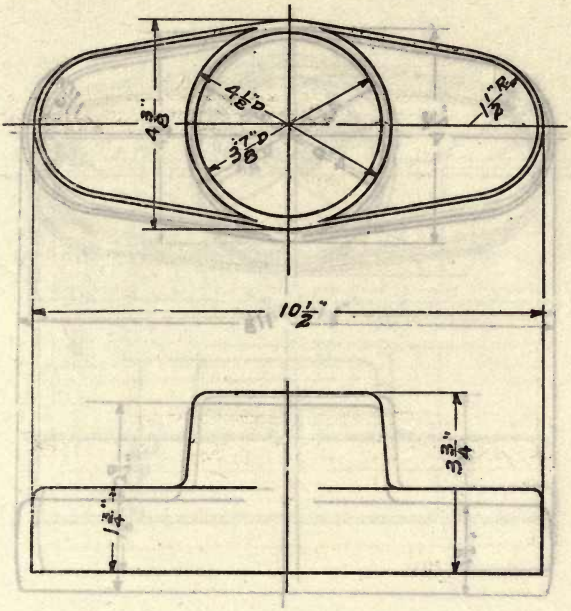

YOKE, VALVE, H. P., 8 1/2″

Weight (steel), 26.2 lbs. **Die number, 1526-Y**
Former die number, (1070)

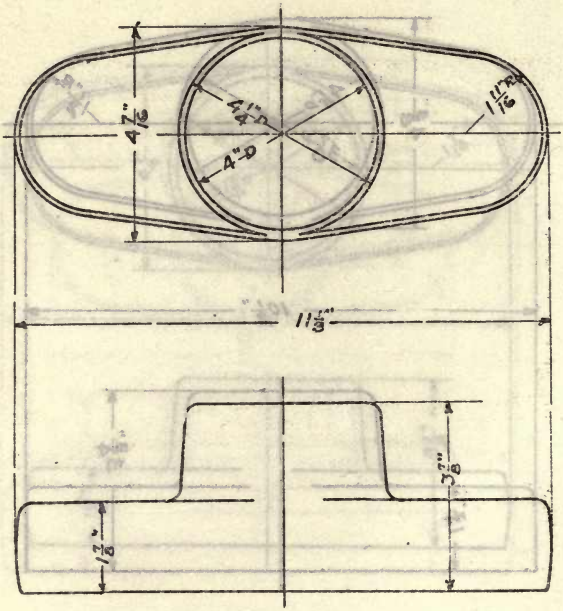

YOKE, VALVE, H. P., 9″

Weight (steel), 30.0 lbs.

Die number, 1527-Y
Former die number, (1071)

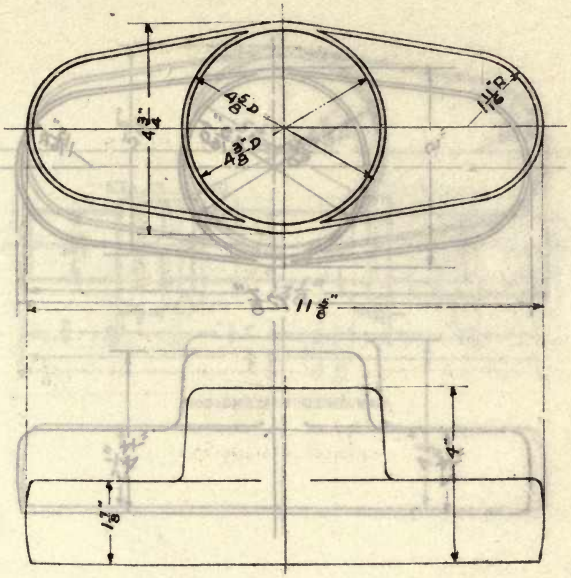

YOKE, VALVE, H. P., 9 1/2″

Weight (steel), 31.5 lbs. **Die number, 1528-Y**
Former die number, (1072)

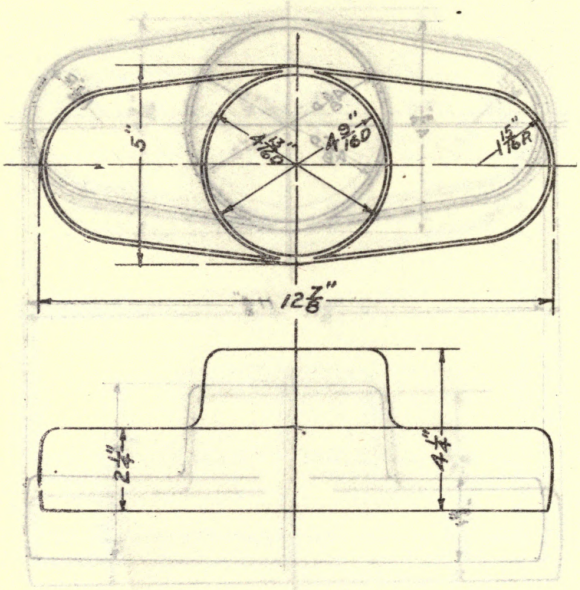

YOKE, VALVE, H. P., 10″ AND 10 1/2″

Weight (steel), 42.8 lbs. Die number, 1529-Y
Former die number, (1073)

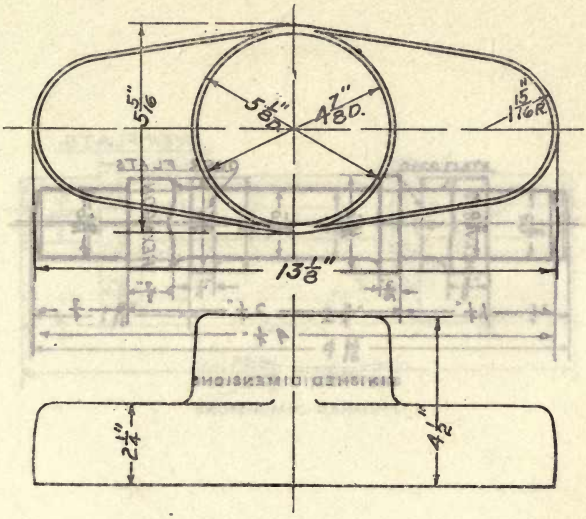

YOKE, VALVE, H. P., 11"

Weight (steel), 47.0 lbs. **Die number, 1530-Y**
Former die number, (1074)

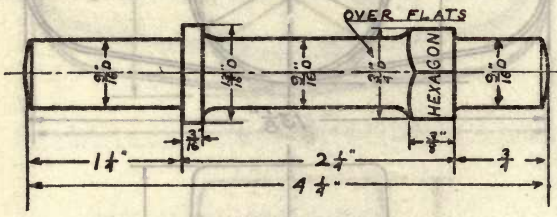

FINISHED DIMENSIONS

STANCHION, YOKE, VALVE, H. P., 1″ AND 1 1/4″

Weight, lbs. Die number, 1531-Y
Former die number, (1082-1)

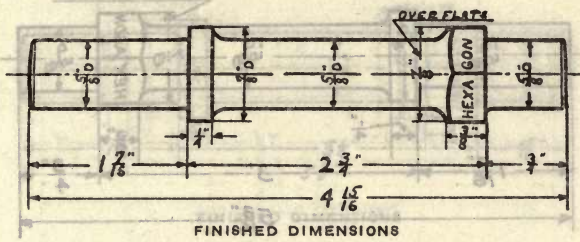

FINISHED DIMENSIONS

STANCHION, YOKE, VALVE, H. P., 1 1/2″ AND 2″

Weight, lbs. **Die number, 1532-Y**
Former die number, (1082-2)

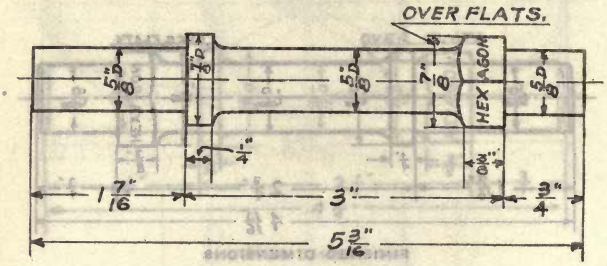

FINISHED DIMENSIONS

STANCHION, YOKE, VALVE, H. P., 2 1/2″

Weight (steel), 0.75 lbs. **Die number, 1533-Y**
Former die number, (1083-1)

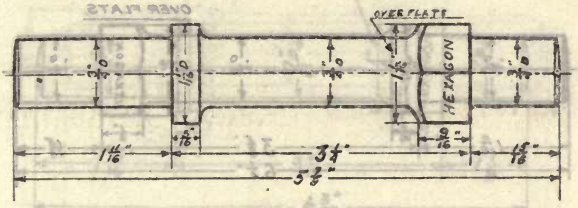

FINISHED DIMENSIONS

STANCHION, YOKE, VALVE, H. P., 3″

Weight (steel), 1.0 lb. **Die number, 1534-X**
Former die number, (1083-2)

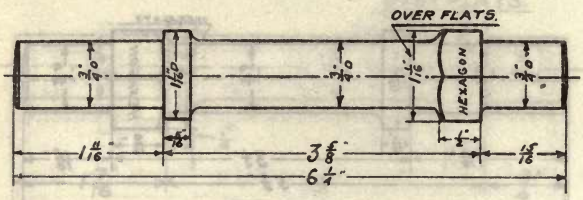

STANCHION, YOKE, VALVE, H. P., 3 1/2″

Weight (steel), 1.0 lb. **Die number, 1535-Y**
Former die number, (1084-1)

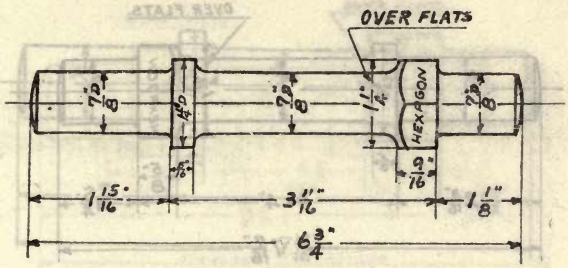

STANCHION, YOKE, VALVE, H. P., 4″

Weight (steel), 1.2 lbs. **Die number, 1536-Y**
Former die number, (1084-2)

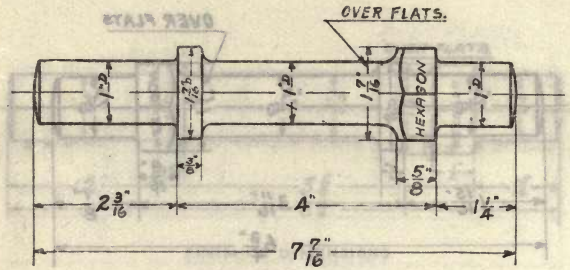

FINISHED DIMENSIONS

STANCHION, YOKE, VALVE, H. P., 4 1/2″

Weight (steel), 2.2 lbs. **Die number, 1537-Y**
Former die number, (1085-1)

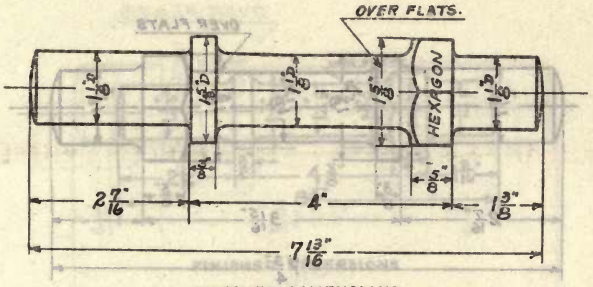

FINISHED DIMENSIONS

STANCHION, YOKE, VALVE, H. P., 5″

Weight (steel), 3.0 lbs. **Die number, 1538-Y**
Former die number, (1085-2)

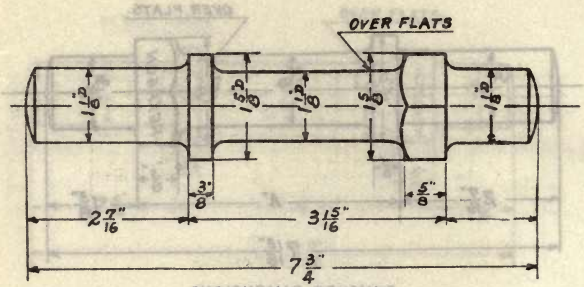

FINISHED DIMENSIONS

STANCHION, YOKE, VALVE, H. P., 5 1/2″

Weight (steel), 3.0 lbs. **Die number, 1539-Y**
Former die number, (1086-1)

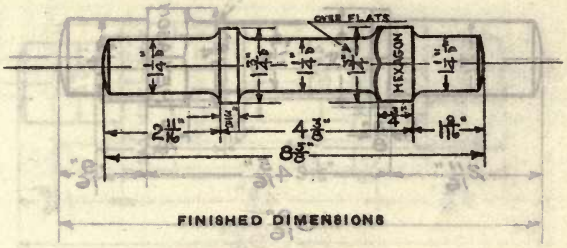

STANCHION, YOKE, VALVE, H. P., 6″

Weight (steel), 4.0 lbs. **Die number, 1540-Y**
Former die number, (1086-2)

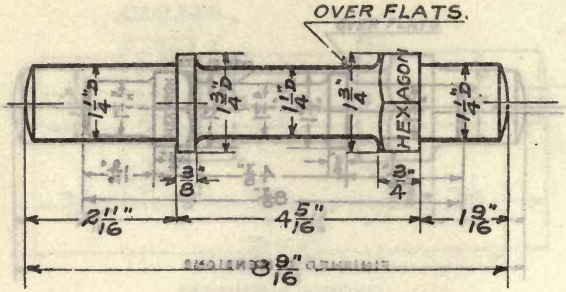

FINISHED DIMENSIONS

STANCHION, YOKE, VALVE, H. P., 6 1/2″

Weight (steel), 4.0 lbs. Die number, 1541-Y
Former die number, (1087-1)

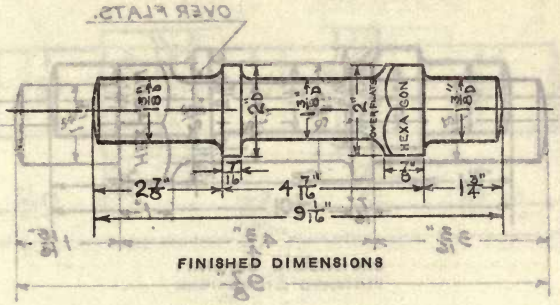

FINISHED DIMENSIONS

STANCHION, YOKE, VALVE, H. P., 7″

Weight, lbs. **Die number, 1542-Y**
Former die number, (1087-2)

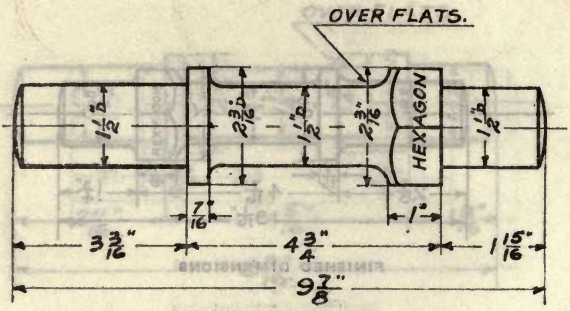

FINISHED DIMENSIONS

STANCHION, YOKE, VALVE, H. P., 7 1/2″

Weight, lbs. **Die number, 1543-Y**
Former die number, (1088-1)

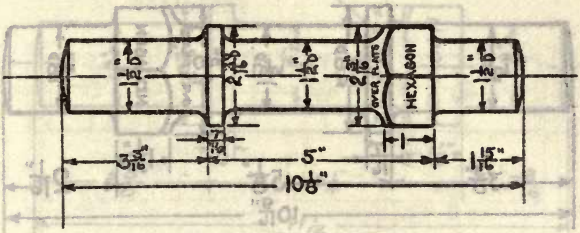

FINISHED DIMENSIONS

STANCHION, YOKE, VALVE, H. P., 8″

Weight, ____ lbs. Die number, 1544-Y
Former die number, (1088-2)

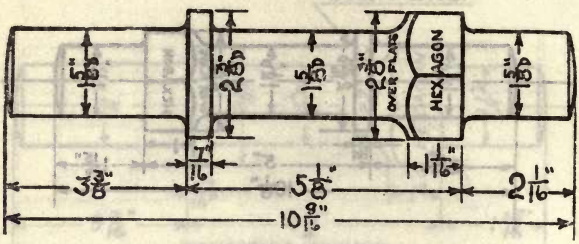

FINISHED DIMENSIONS

STANCHION, YOKE, VALVE, H. P., 8 1/2″

Weight, lbs. **Die number, 1545-Y**
Former die number, (1089-1)

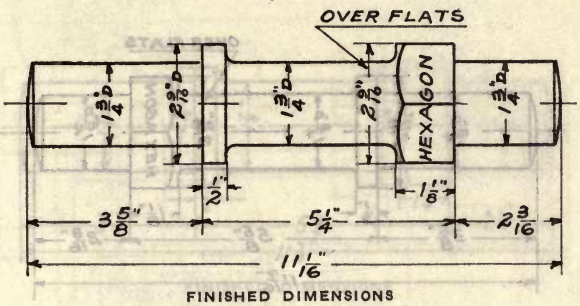

FINISHED DIMENSIONS

STANCHION, YOKE, VALVE, H. P., 9″

Weight (steel), 10.0 lbs. **Die number, 1546-Y**
Former die number, (1089-2)

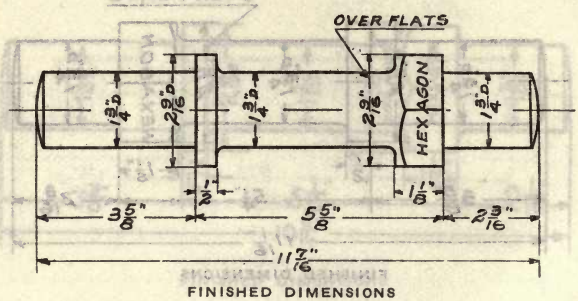

FINISHED DIMENSIONS

STANCHION, YOKE, VALVE, H. P., 9 1/2″

Weight (steel), 10.2 lbs. **Die number, 1547-Y**
Former die number, (1090)

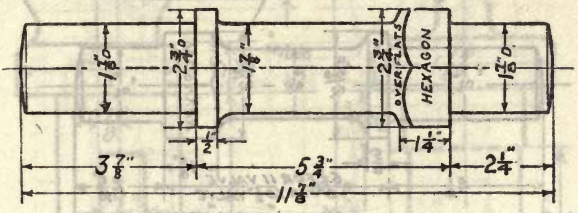

FINISHED DIMENSIONS

STANCHION, YOKE, VALVE, H. P., 10″

Weight (steel), 12.5 lbs. **Die number, 1548-Y**
Former die number, (1091)

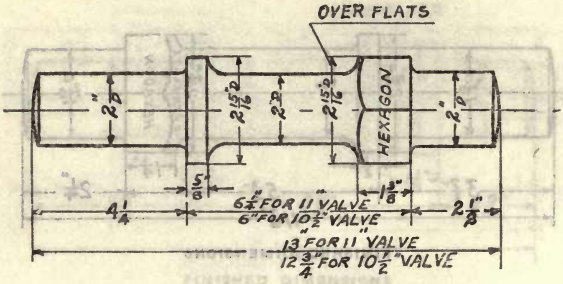

FINISHED DIMENSIONS

STANCHION, YOKE, VALVE, H. P., 10 1/2" AND 11"

Weight (steel), 15.5 lbs. **Die number, 1549-Y**
Former die number, (1092)

NOT STANDARD STOCK

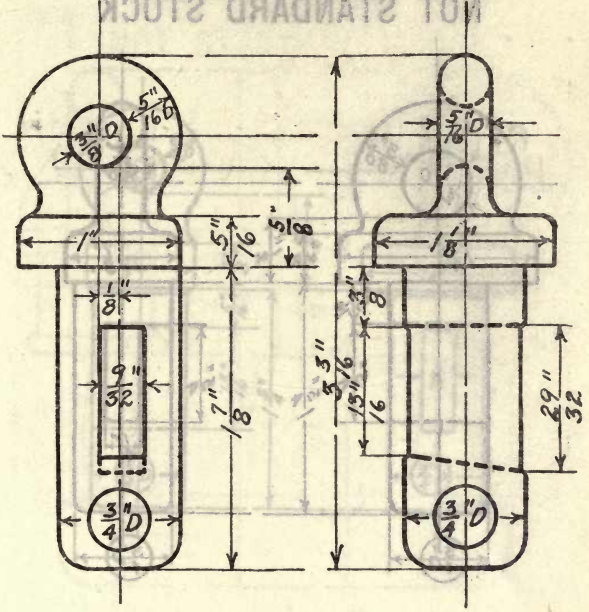

BOLT, LOCKING, 3/4″

Weight (n. brass), 0.75 lb. Die number, 1550-MN
Former die numbers, (3-38) (3-11)

NOT STANDARD STOCK

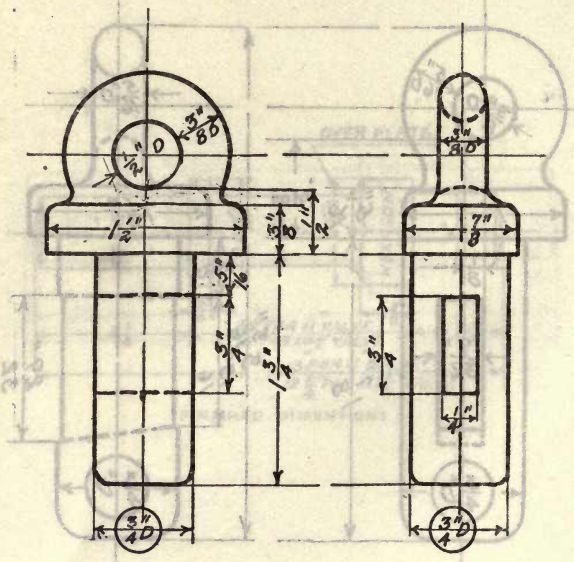

BOLT, LOCKING, 3/4″

Weight (steel), 1.5 lbs. **Die number, 1551-B**
Former die number, (216)

NOT STANDARD STOCK

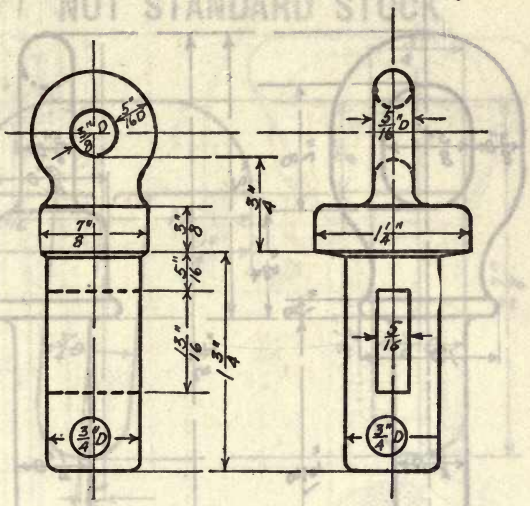

BOLT, LOCKING, 3/4″

Weight (steel), 0.38 lb. **Die number, 1552-Y**
Former die number, (395)

NOT STANDARD STOCK

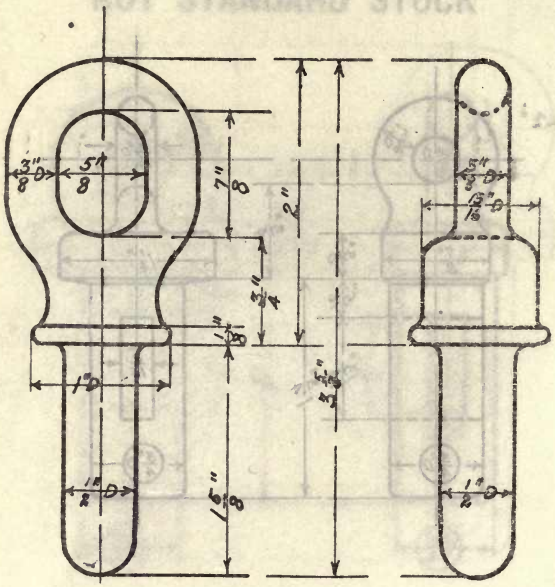

BOLT, EYE, LIFE LINE

Weight, lbs. **Die number, 1553-B**
Former die number, (79)

NOT STANDARD STOCK

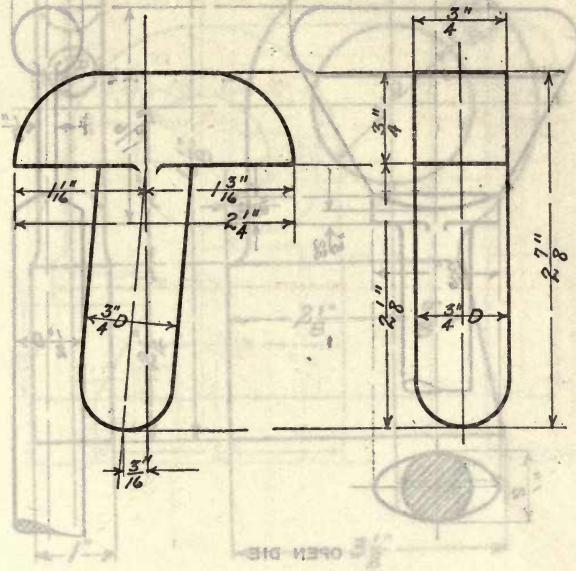

BOLT, TRACK

Weight (steel), 0.56 lb. **Die number, 1554-Y**
Former die number, (423)

NOT STANDARD STOCK

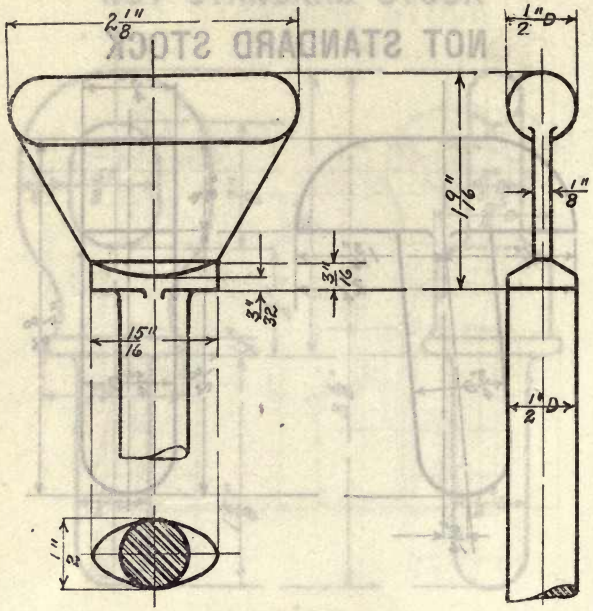

OPEN DIE

BOLT, BRICK

Weight (steel), lbs. **Die number, 1555-B**
Former die number, (264)

NOT STANDARD STOCK

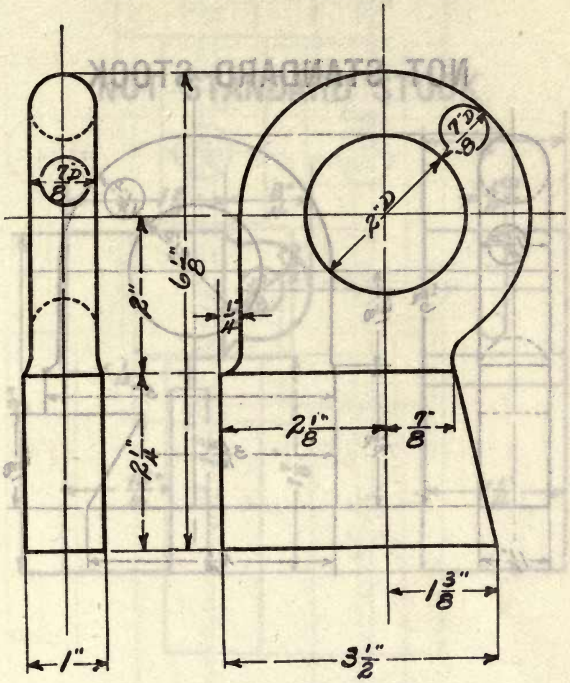

BOLT, LEWIS, 7/8″

Weight (steel), 4.4 lbs.

Die number, 1556-B
Former die number, (217)

NOT STANDARD STOCK

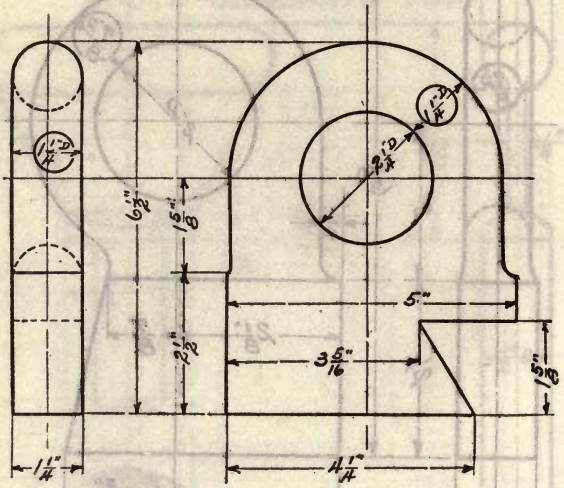

BOLT, LEWIS, 1 1/4″

Weight (steel), 7.6 lbs.

Die number, 1557-Y
Former die number, (344)

NOT STANDARD STOCK

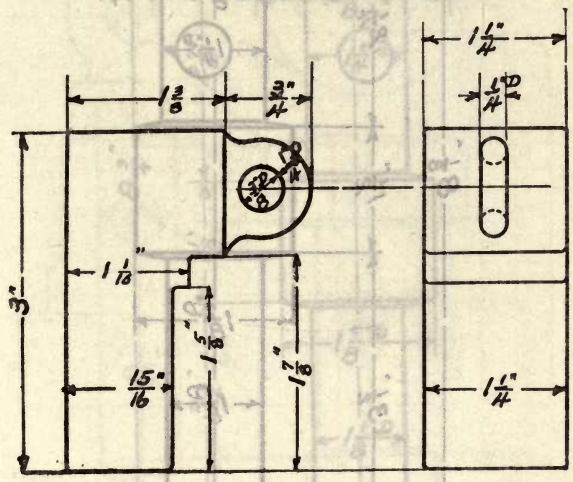

KEY, BOLT, LEWIS

Weight (steel), 1.5 lbs.

Die number, 1558-Y
Former die number, (380)

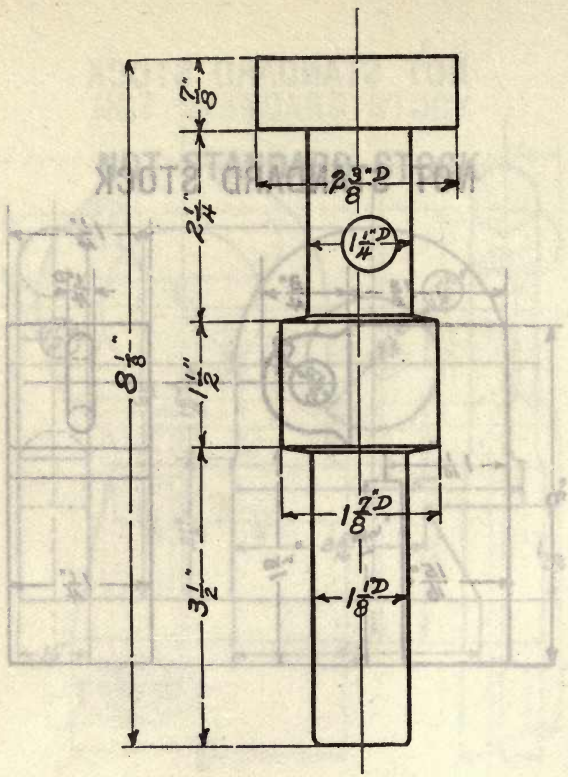

BOLT, SECURING, 1 1/4″

For coal scuttles

Weight (n. brass), 4.4 lbs. Die number, 1559-YM
Former die numbers, (427) (4-16)

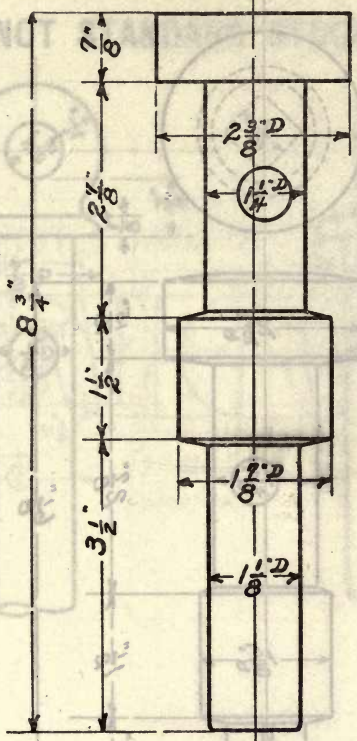

BOLT, SECURING, 1 1/4″

For coal scuttles

Weight (n. brass), 4.6 lbs. Die number, 1560-YM
Former die numbers, (426) (4-17)

NOT STANDARD STOCK

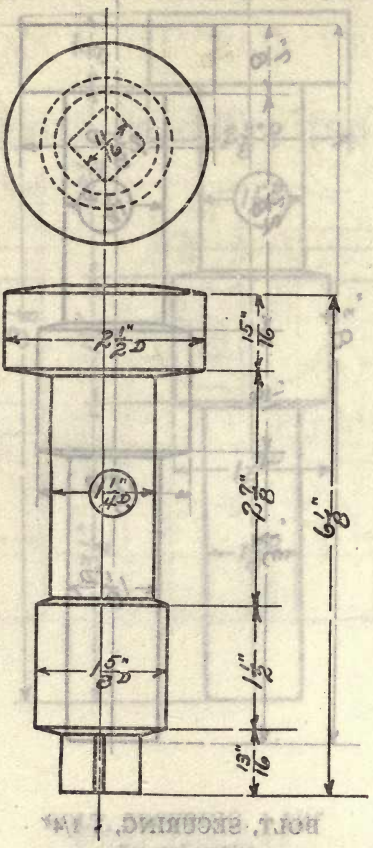

BOLT, SECURING, 1 1/4″

For coal scuttles

Weight, lbs. **Die number, 1561-B**
Former die number, (129)

NOT STANDARD STOCK

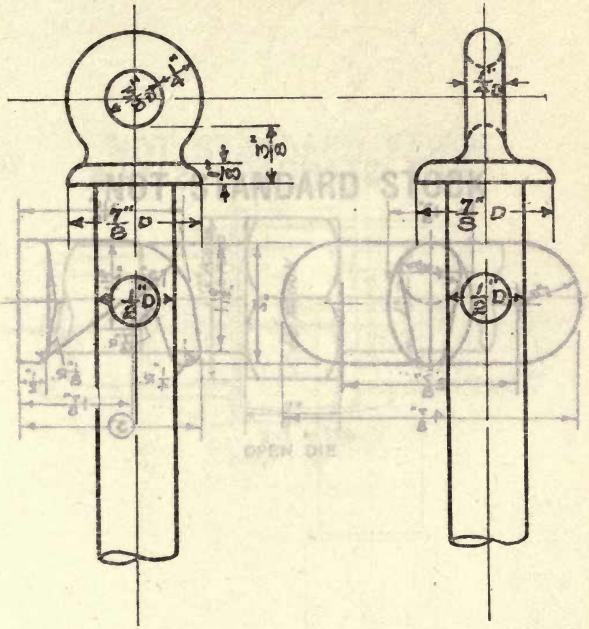

BOLT, EYE, COLLAR, 1/2″

Eye, 3/8″ Length, open die

Weight, lbs. **Die number, 1562-M**
Former die number, (3-17)

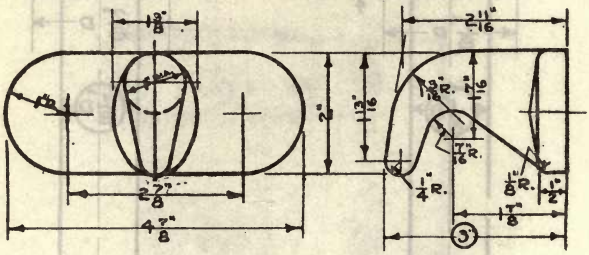

PAD, HOOK, 3″

Weight (steel), lbs. **Die number, 1563-Y**

NOT STANDARD STOCK

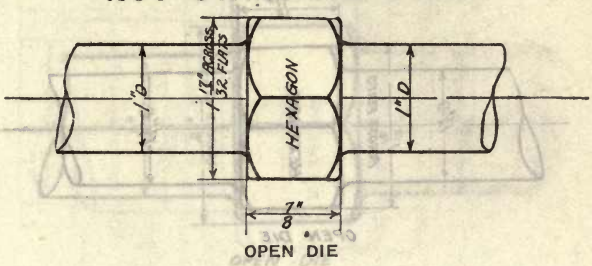

BOLT, SCREW, RIGGING, 2″

Weight, lbs. **Die number, 1564-B**
Former die number, (196)

NOT STANDARD STOCK

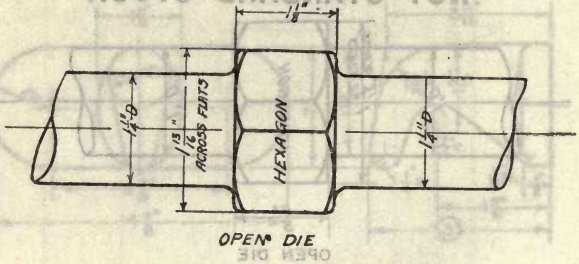

BOLT, SCREW, RIGGING, 2 1/2″

Weight, lbs. **Die number, 1565-B**
Former die number, (206)

NOT STANDARD STOCK

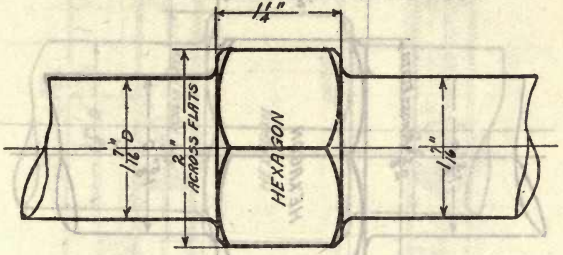

BOLT, SCREW, RIGGING, 3″

Weight, lbs. **Die number, 1566-B**
Former die number, (141)

NOT STANDARD STOCK

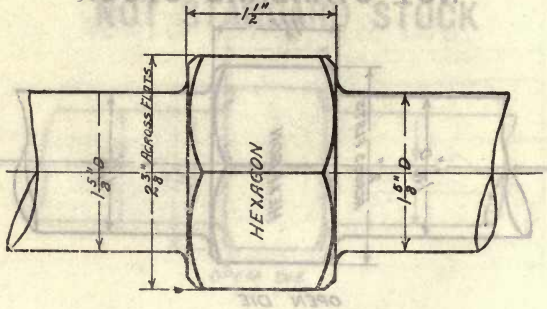

OPEN DIE

BOLT, SCREW, RIGGING, 3 1/2″

Weight, **lbs.** **Die number, 1567-B**
Former die number, (207)

NOT STANDARD STOCK

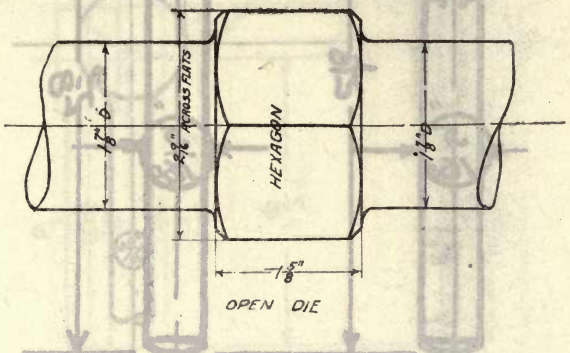

BOLT, SCREW, RIGGING, 4″

Weight, lbs. **Die number, 1568-B**
Former die number, (142)

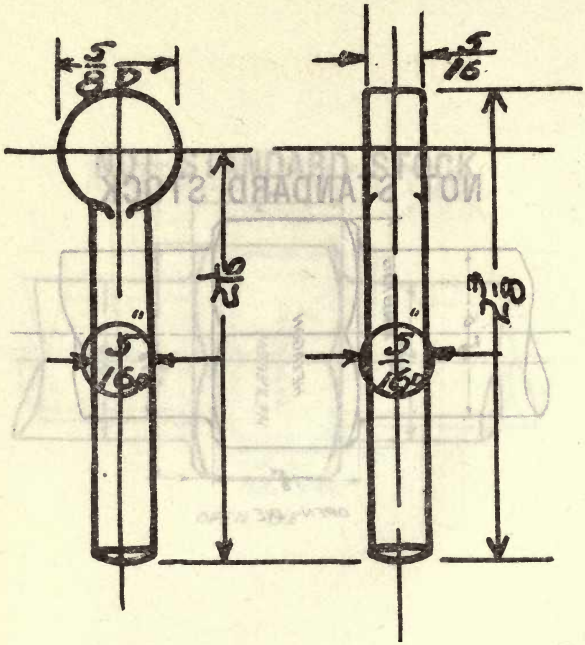

BOLT, DROP, 5/16″

Head, 5/16′ x 5/8′ D. Length, 2 1/16′

Weight (steel), 0.10 lb. **Die number, 1569-Y**
Former die number, (87)

NOT STANDARD STOCK

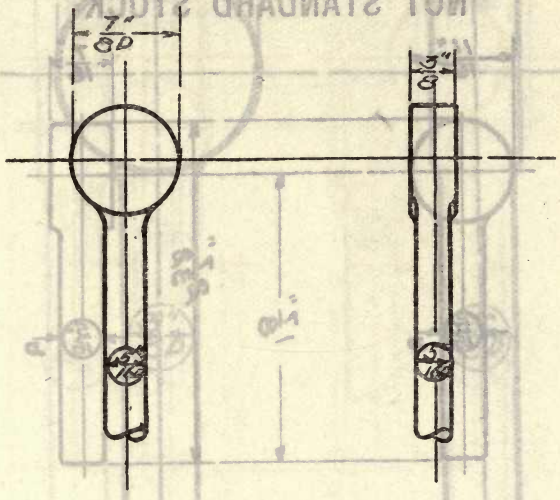

BOLT, DROP, 5/16″

Head, 3/8″ x 7/8″ D. Length, open die

Weight, lbs. Die number, 1570-MY
Former die numbers, (7-47) (1101)

NOT STANDARD STOCK

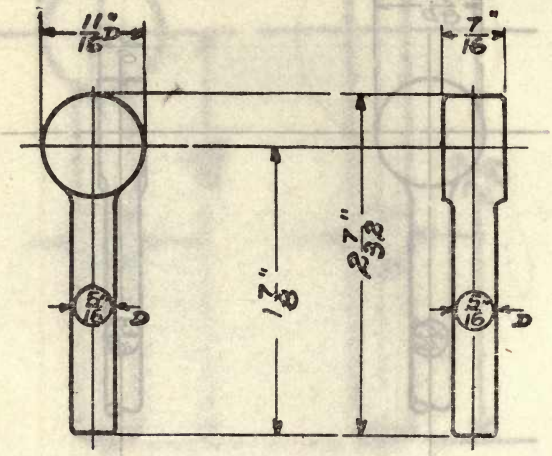

BOLT, DROP, 5/16″

Head, 7/16″ x 11′ D. **Length, 1 7/8″**

Weight (steel), 0.38 lb. **Die number, 1571-N**
Former die number, (4-38)

NOT STANDARD STOCK

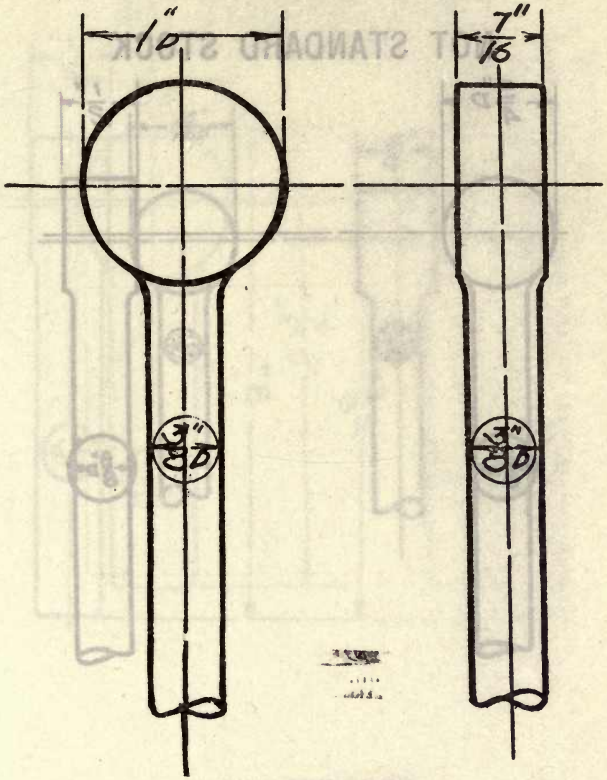

BOLT, DROP, 3/8″

Head, 7/16″ x 1″ D. Length, open die

Weight, lbs. Die number, 1572-M
Former die number, (7-70)

NOT STANDARD STOCK

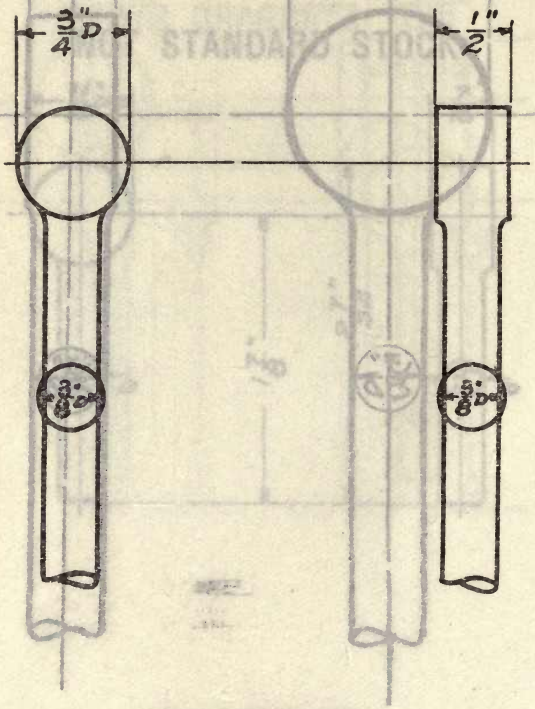

BOLT, DROP, 3/8″

Head, 1/2″ x 3/4″ D. Length, open die

Weight, lbs. **Die number, 1573-M**
Former die number, (3-59)

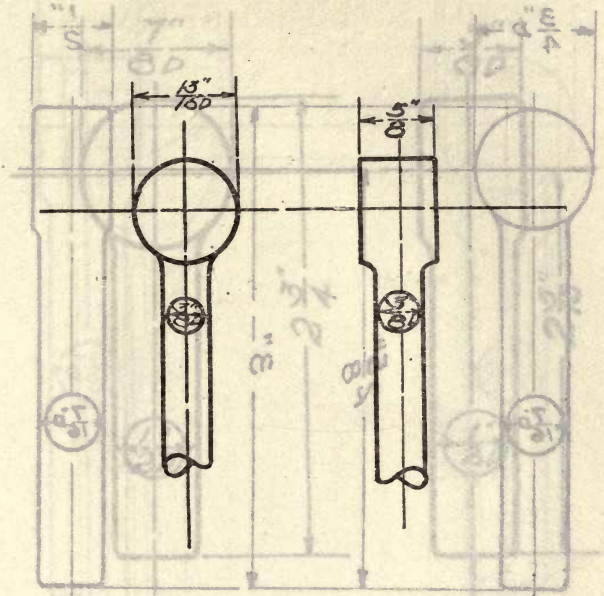

BOLT, DROP, 3/8″

Head, 5/8″ x 13/16″ D. Length, open die

Weight, lbs. Die number, 1574-YP
Former die numbers, (514) (239)

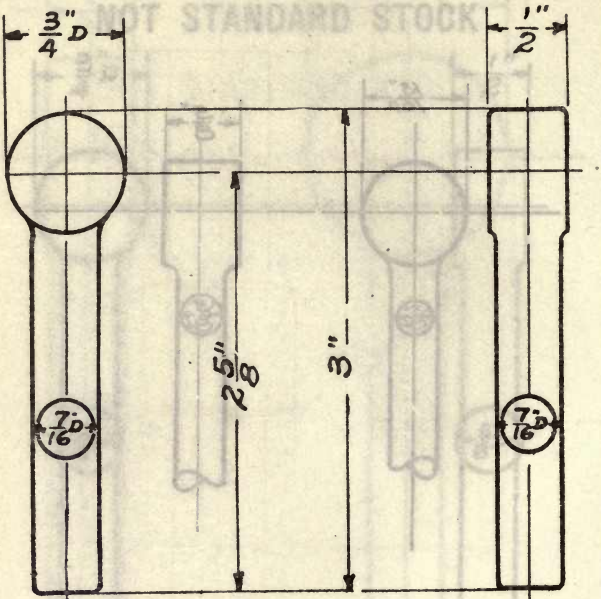

BOLT, DROP, 7/16″

Head, 1/2″ x 3/4″ D. Length, 2 5/8″

Weight (steel), 0.5 lb. **Die number, 1575-N**
Former die number, (4-40)

NOT STANDARD STOCK

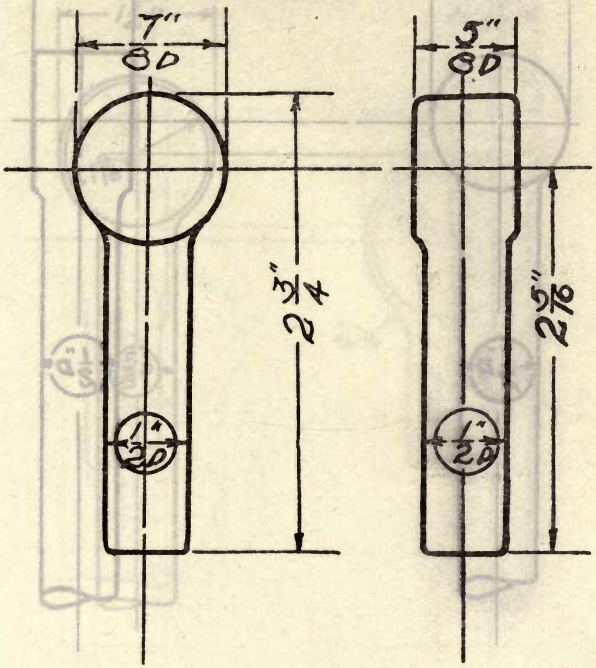

BOLT, DROP, 1/2″

Head, 5/8″ x 7/8″ D. Length, 2 5/16″

Weight (steel), 0.5 lb. **Die number, 1576-N**
Former die number, (4-39)

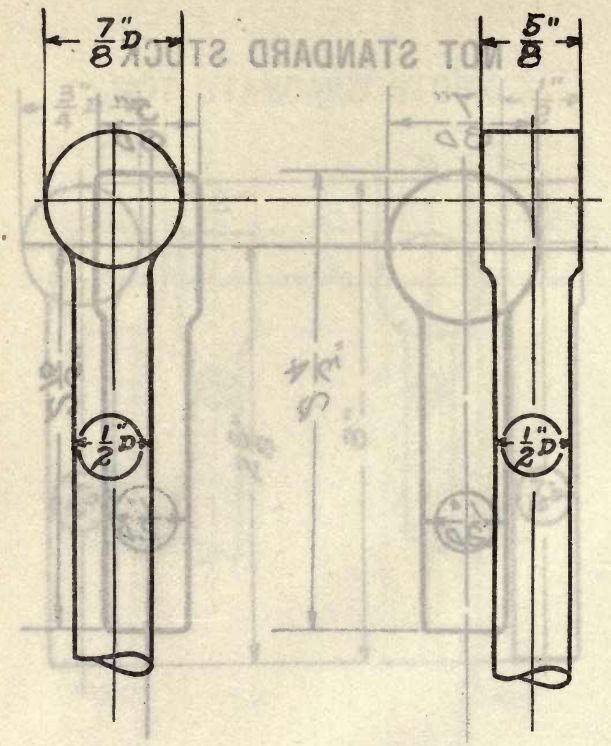

BOLT, DROP, 1/2″

Head, 5/8″ x 7/8″ **Length, open die**

Weight, **lbs.** **Die number, 1577-M**
Former die number, (3-60)

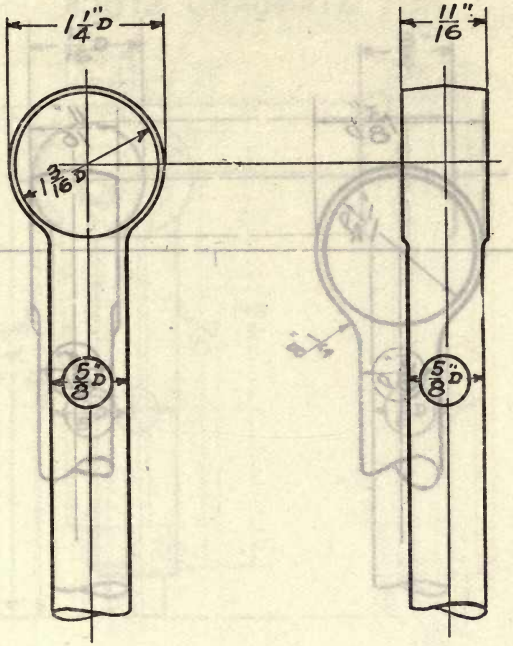

BOLT, DROP, 5/8″

Head, 11/16″ x 1 1/4″ D. Length, open die

Weight, lbs. **Die number, 1578-Y**
Former die number, (43)

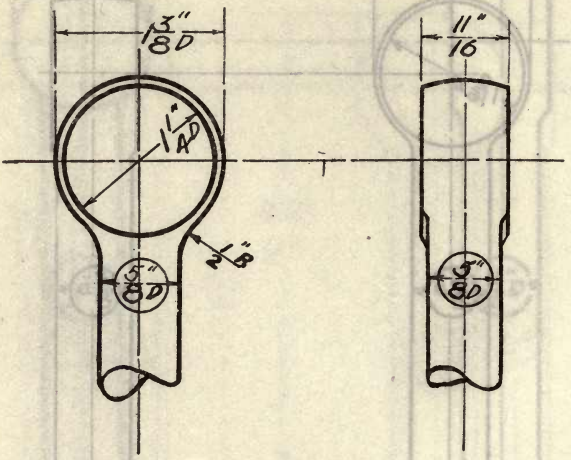

BOLT, DROP, 5/8″

Head, 11/16′ x 1 3/8′ D. Length, open die

Weight, lbs. **Die number, 1579-Y**
Former die number, (287)

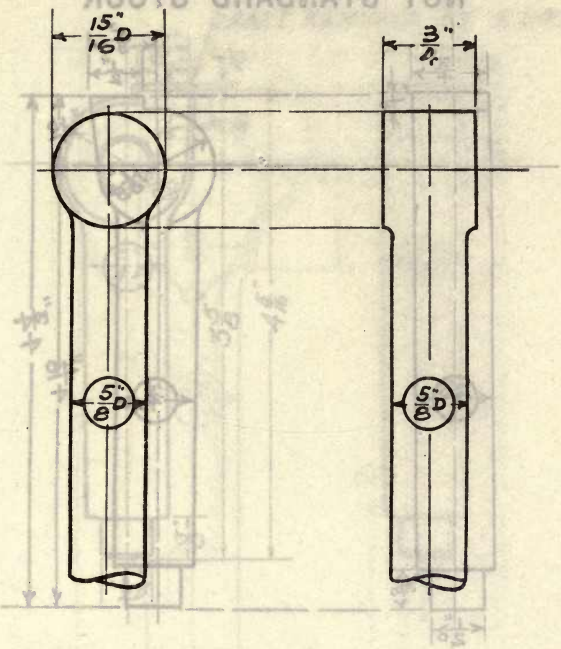

BOLT, DROP, 5/8″

Head, 3/4″ x 15/16″ D. Length, open die

Weight, lbs. Die number, 1580-M
Former die number, (3-61)

NOT STANDARD STOCK

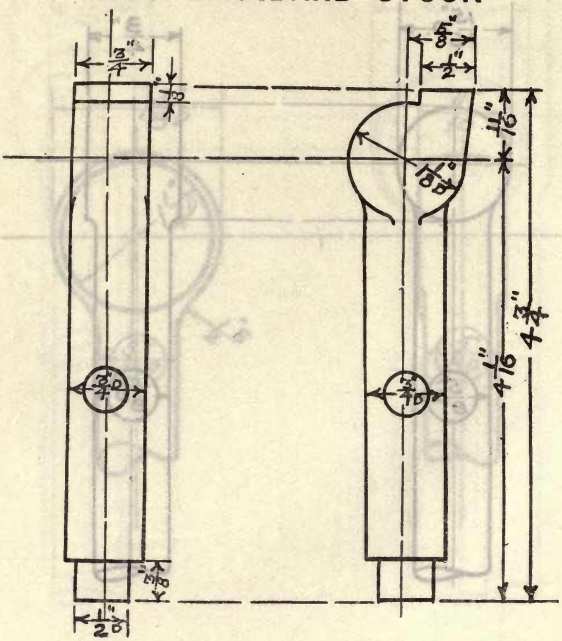

BOLT, DROP, 3/4″

Head, 3/4″ x 1 1/8″ D. Length, 4 1/16″

Weight (steel), 1.25 lbs. **Die number, 1581-N**
Former die number, (4-1)

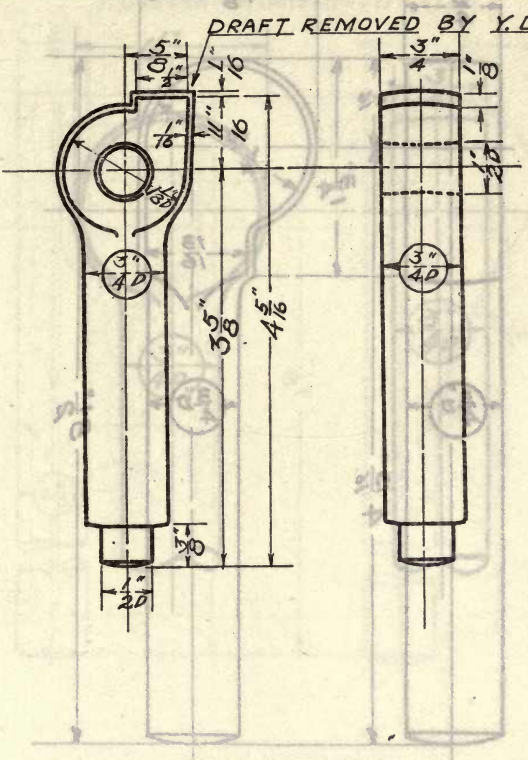

BOLT, DROP, 3/4″

Head, 3/4″ x 1 1/8″ D. Length, 3 5/8″

Weight (n. brass), 0.63 lb. Die number, 1582-YMB
Former die numbers, (428), (4-1), (127)

NOT STANDARD STOCK

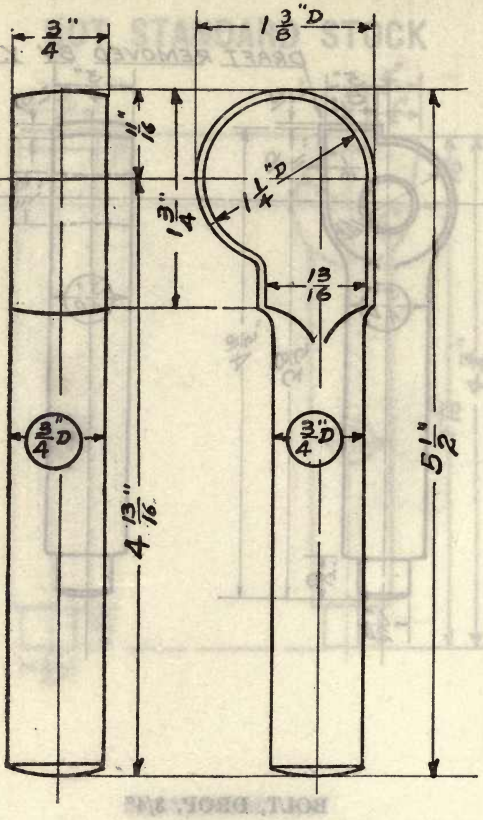

BOLT, DROP, 3/4″

Head, 3/4″ x 1 1/4″ D. Length, 4 13/16″

Weight (steel), 1.1 lbs. **Die number, 1583-Y**
Former die number, (50)

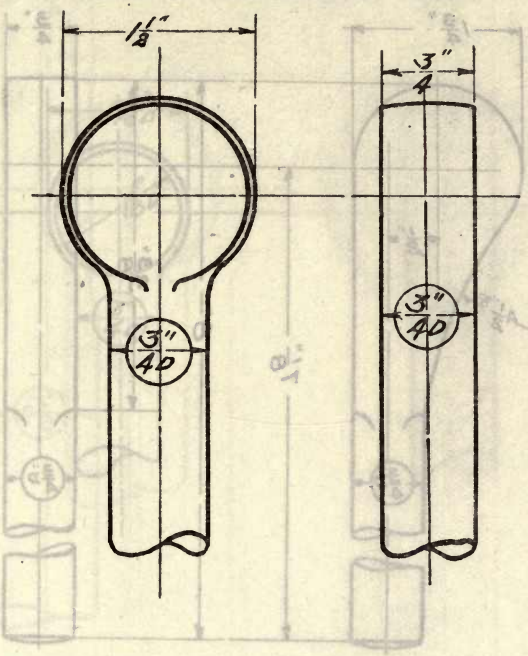

BOLT, DROP, 3/4″

Head, 3/4″ x 1 1/2″ D. Length, open die

Weight, lbs. **Die number, 1584-M**
Former die number, (7-42)

NOT STANDARD STOCK

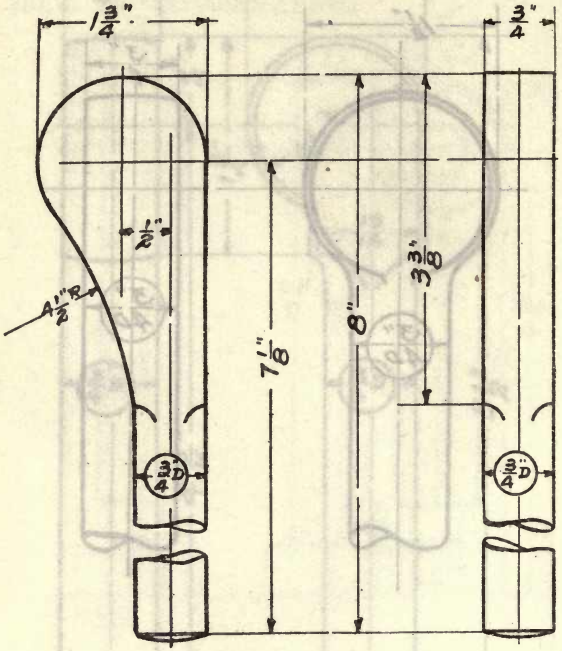

BOLT, DROP, 3/4″

Head, 3/4″ x 1 3/4″ D. Length, 7 1/8″

Weight, 1.3 lbs. **Die number, 1585-Y**
Former die number, (51)

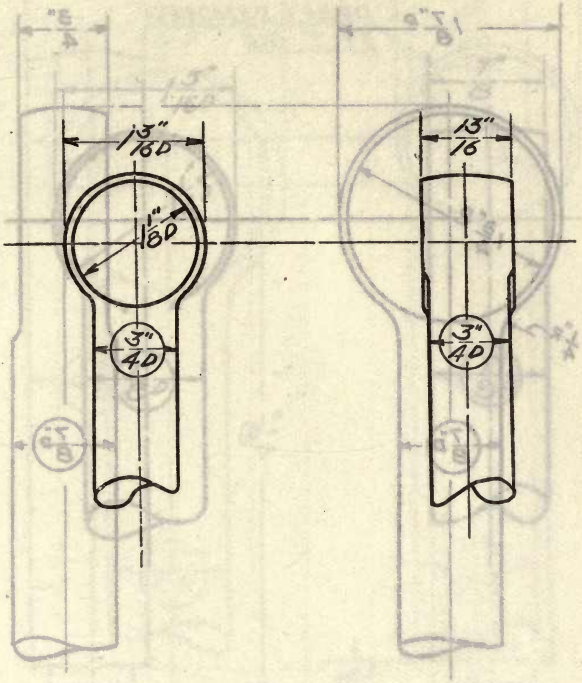

BOLT, DROP, 3/4″

Head, 13/16″ x 1 3/16″ D. Length, open die

Weight, lbs. **Die number, 1586-YM**
Former die number, (42)

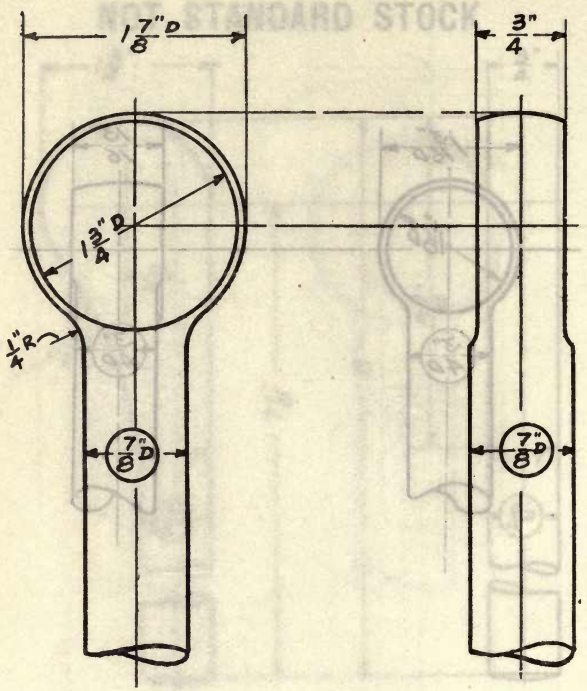

BOLT, DROP, 7/8″

Head, 3/4″ x 1 7/8″ D. Length, open die

Weight, lbs. **Die number, 1587-Y**
Former die number, (53)

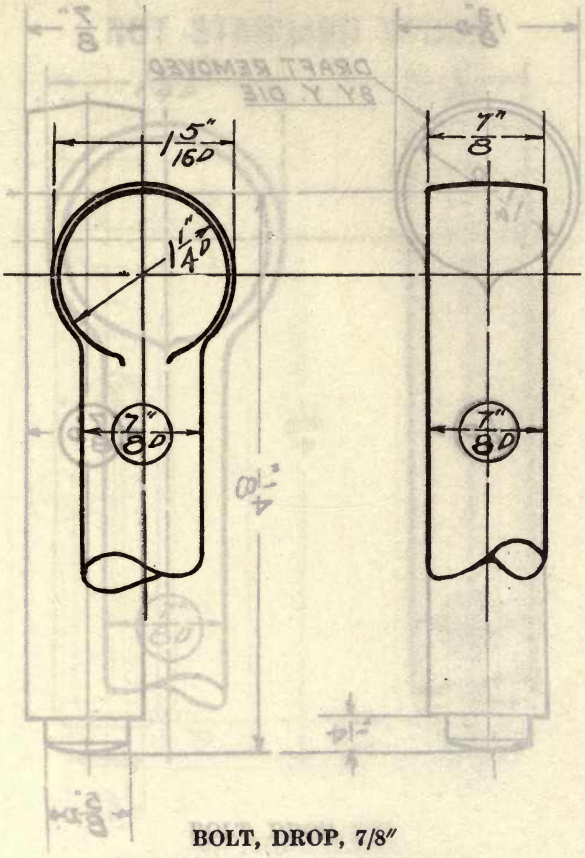

BOLT, DROP, 7/8″

Head, 7/8″ x 1 5/16″ D. Length, open die

Weight, lbs. Die number, 1588-YBM
Former die numbers, (49) (122) (4-3)

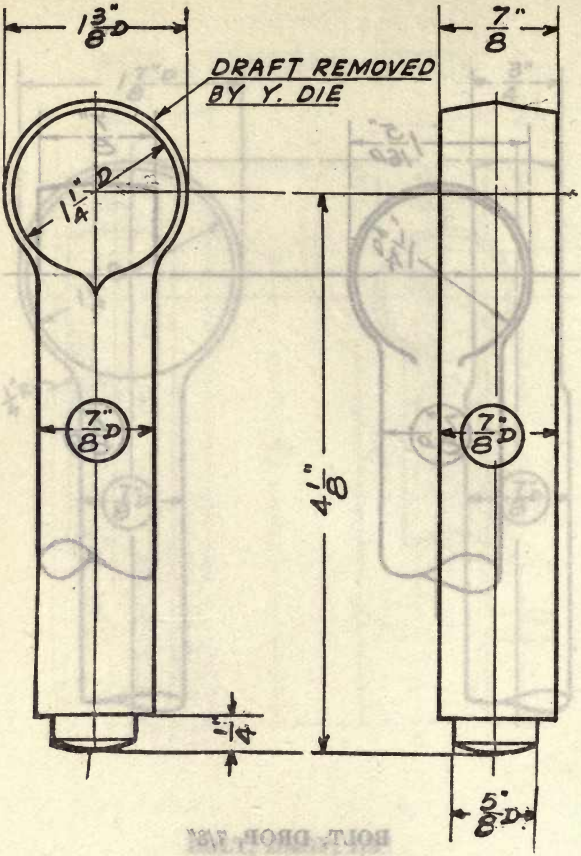

BOLT, DROP, 7/8″

Head, 7/8″ x 1 1/4″ D. Length, 4 1/8″

Weight (n. brass), 1.0 lb. Die number, 1589-YN
Former die numbers, (52) (4-3)

NOT STANDARD STOCK

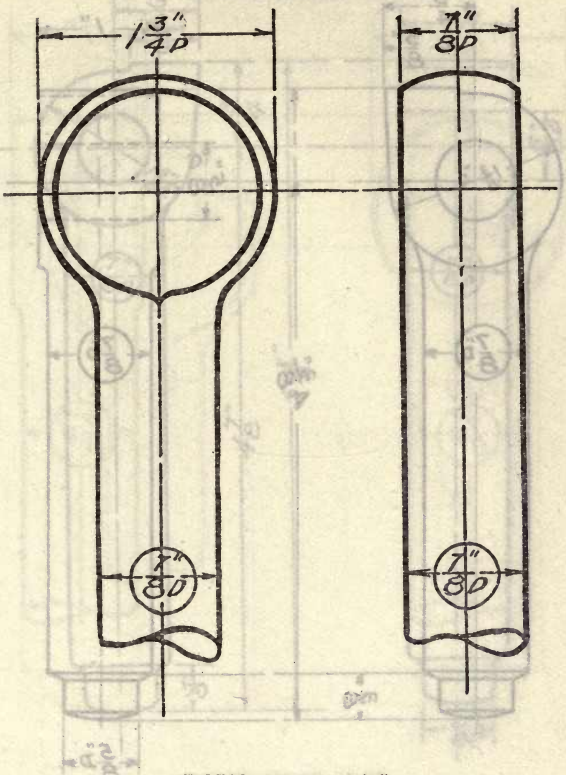

BOLT, DROP, 7/8″

Head, 7/8″ x 1 3/4″ D. Length, open die

Weight, lbs. Die number, 1590-MY
Former die numbers, (7-69) (1009)

NOT STANDARD STOCK

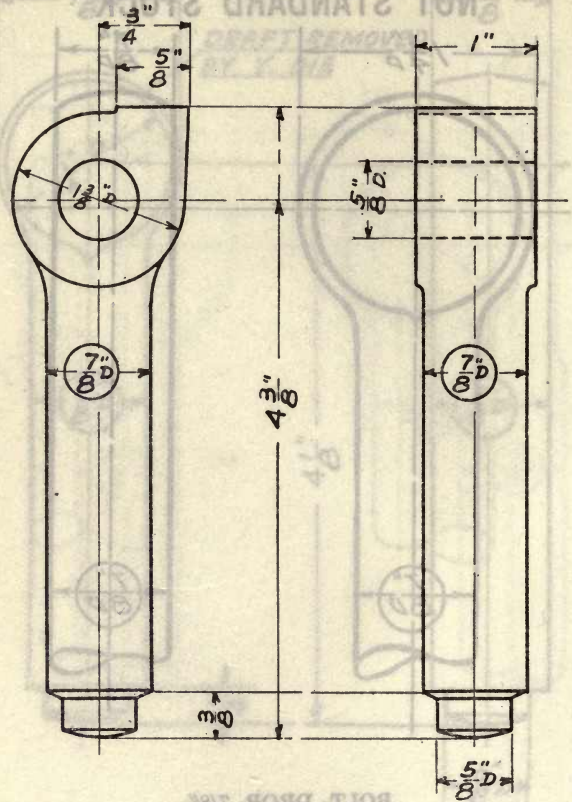

BOLT, DROP, 7/8″

Head, 1″ x 1 3/8″ D. Length, 4 3/8″

Weight (n. brass), 0.75 lb. Die number, 1591-Y
Former die number, (429-A)

NOT STANDARD STOCK

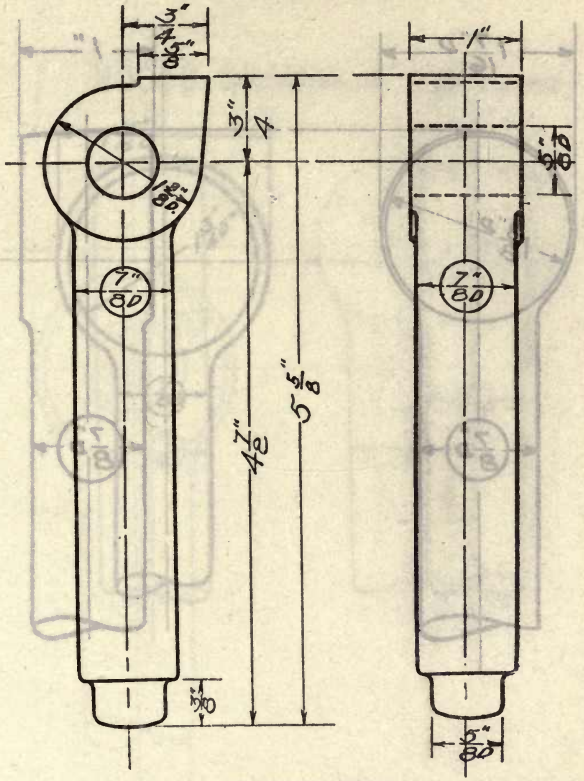

BOLT, DROP, 7/8″

Head, 1″ x 1 3/8″ D. Length, 4 7/8″

Weight (n. brass), 0.78 lb. Die number, 1592-Y
Former die number, (429)

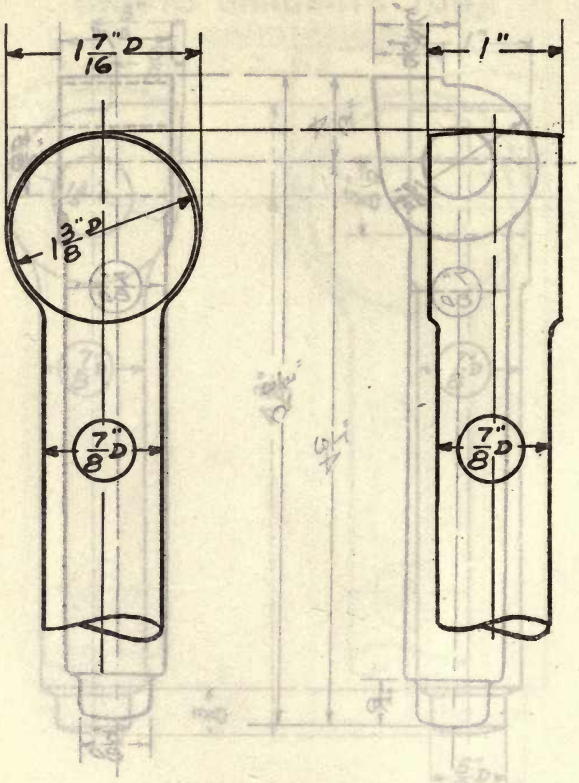

BOLT, DROP, 7/8″

Head, 1′ x 1 7/16′ D. Length, open die

Weight, lbs. Die number, 1593-B
Former die number, (153)

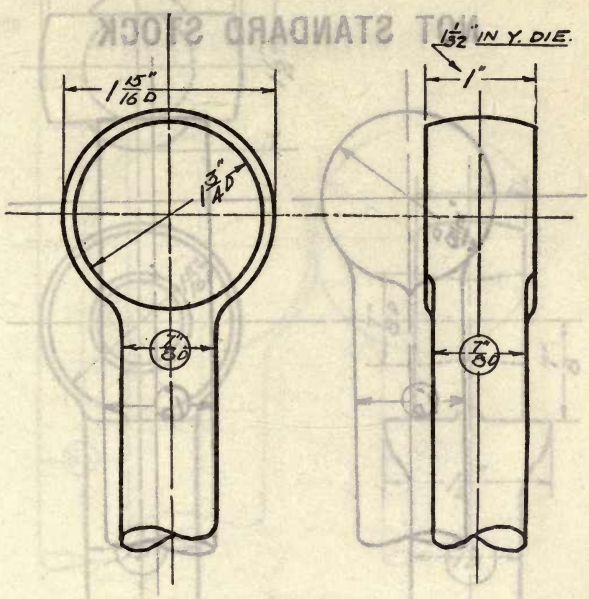

BOLT, DROP, 7/8″

Head, 1″ x 1 15/16″ D. Length, open die

Weight, lbs. Die number, 1594-YBMN
Former die numbers, (56) (128) (4-20) (4-20)

NOT STANDARD STOCK

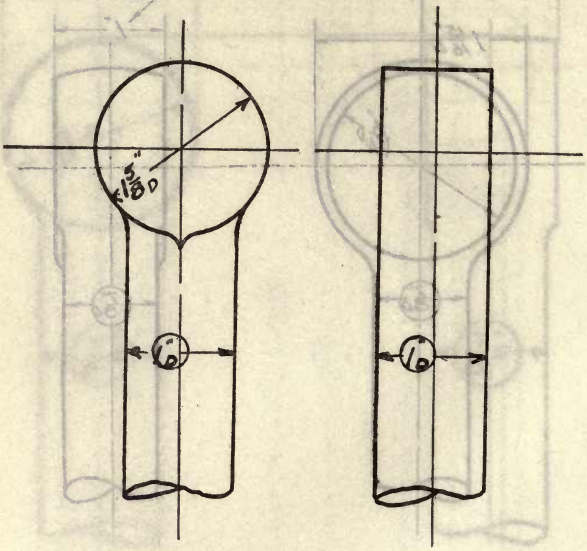

BOLT, DROP, 1″

Head, 1″ x 1 5/8″ D. Length, open die

Weight, lbs. **Die number, 1595-Y**
Former die number, (430-A)

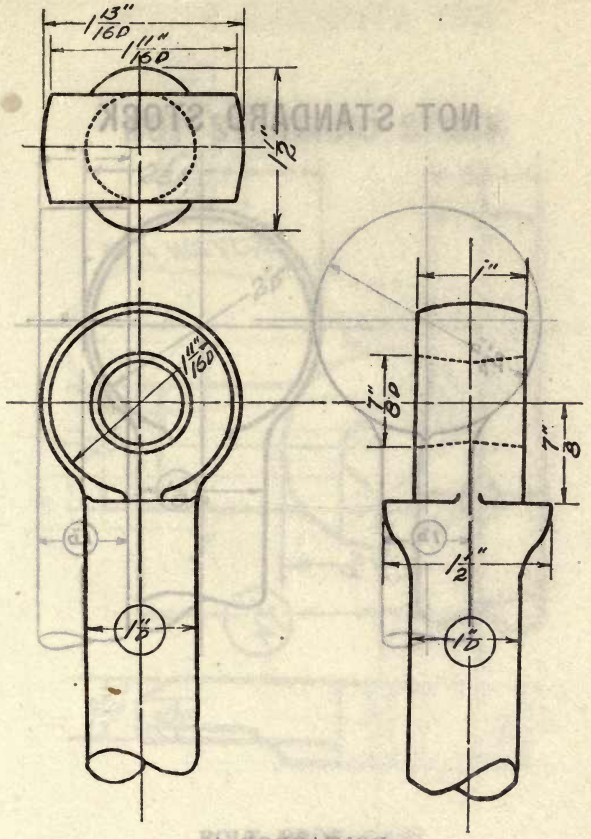

BOLT, DROP, 1″

Head, 1″ x 1 13/16″ D. Length, open die

Weight, lbs. Die number, 1596-YM
Former die numbers, (412) (4-61)

NOT STANDARD STOCK

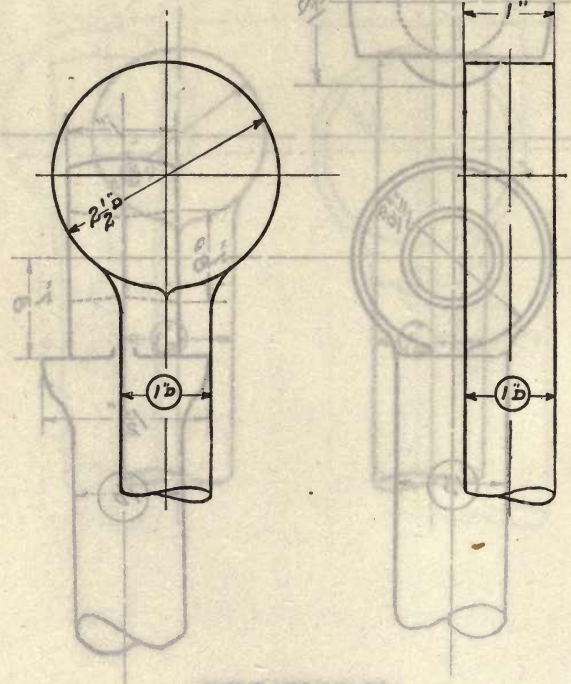

BOLT, DROP, 1″

Head, 1″ x 2 1/2″ D. Length, open die

Weight, lbs. Die number, 1597-Y
Former die number, (430)

NOT STANDARD STOCK

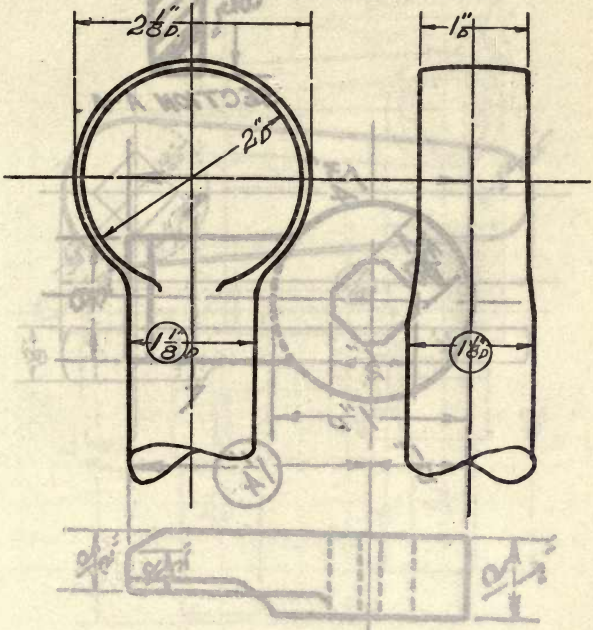

BOLT, DROP, 1 1/8″

Head, 1″ x 2″ D. Length, open die

Weight, lbs. Die number, 1598-Y
Former die number, (288)

NOT STANDARD STOCK

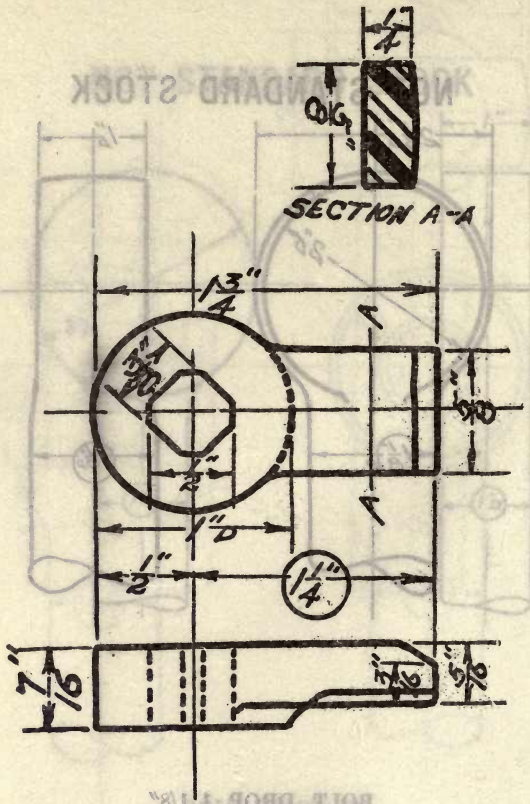

DOG, 1 1/4"

Weight (steel), 0.25 lb. **Die number, 1599-N**
Former die number, (3-105)

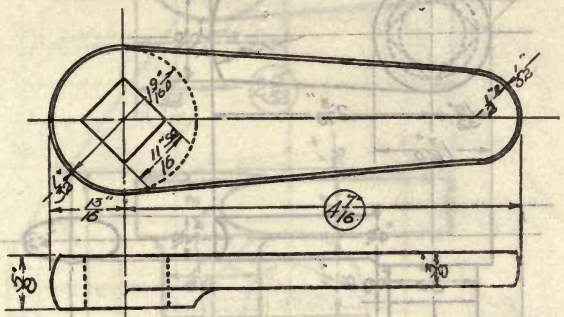

DOG, 4 7/16″

Weight, lbs. Die number, 1600-Y
Former die number, (1129)

NOT STANDARD STOCK

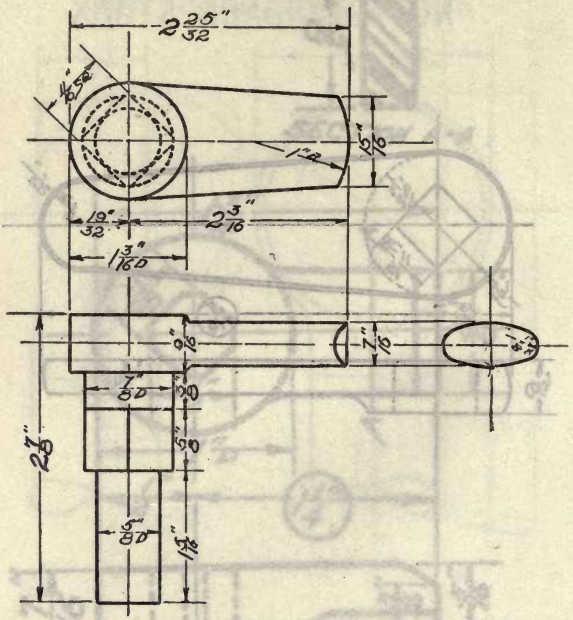

DOG, WITH SPINDLE, 2 3/16″

Weight, lbs. Die number, 1601-M
Former die number, (12-6)

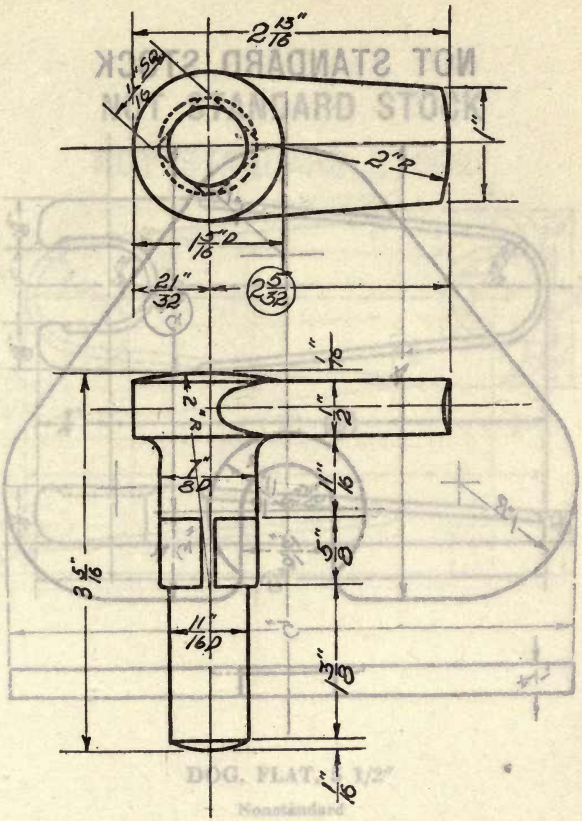

DOG, WITH SPINDLE, 2 5/32″

Weight (steel), 1.0 lb. **Die number, 1602-YN**
Former die numbers, (1122) (3-73)

NOT STANDARD STOCK

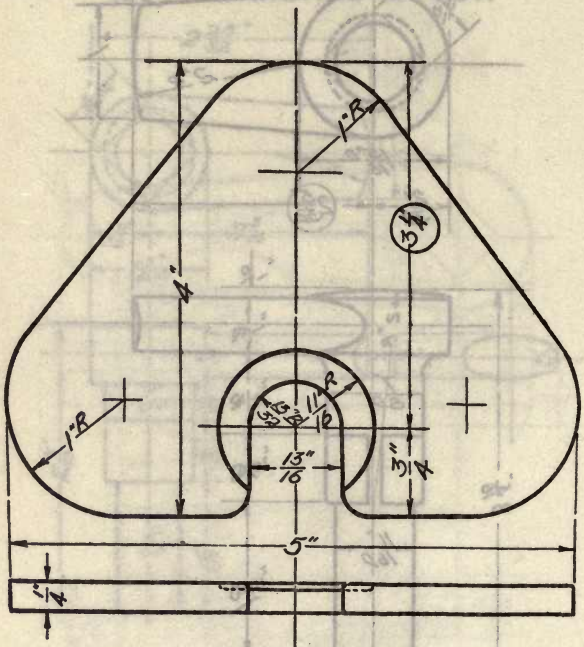

DOG, FLAT, 3 1/4″

Weight (steel), 1.0 lb. **Die number, 1603-Y**
Former die number, (277)

NOT STANDARD STOCK

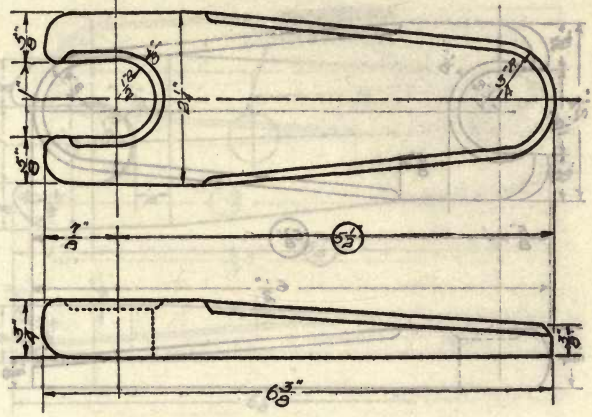

DOG, FLAT, 5 1/2″

Nonstandard

For standard dog see die No. 1606

Weight (steel), 1.75 lbs. **Die number, 1604-NYB**
Former die numbers, (4-2) (59) (57)

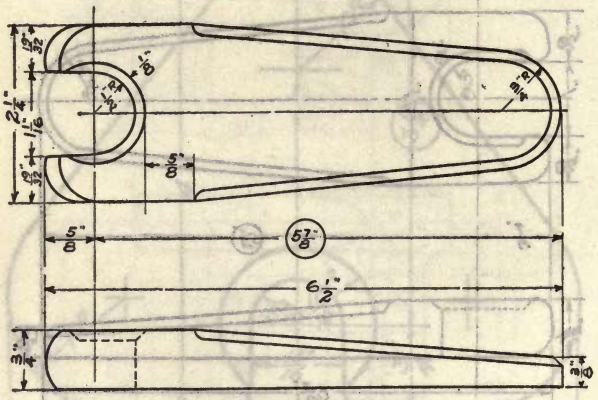

DOG, FLAT, 5 7/8″

Weight (steel), 1.94 lbs. **Die number, 1605-PY**
Former die numbers, (235) (77)

NOT STANDARD STOCK

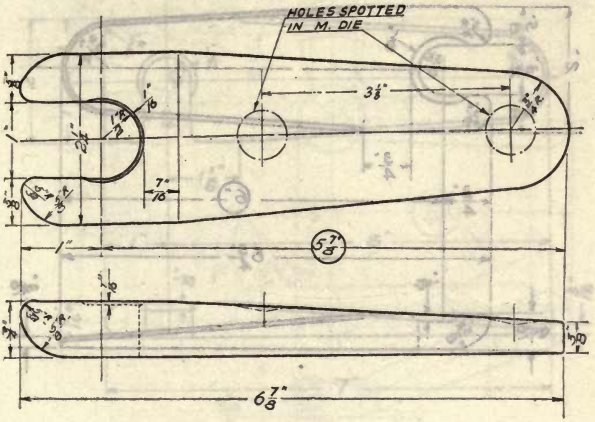

DOG, FLAT, 5 7/8″

Weight (steel), 2.0 lbs. Die number, 1606-BMN
Former die numbers, (84) (4-7) (4-7)

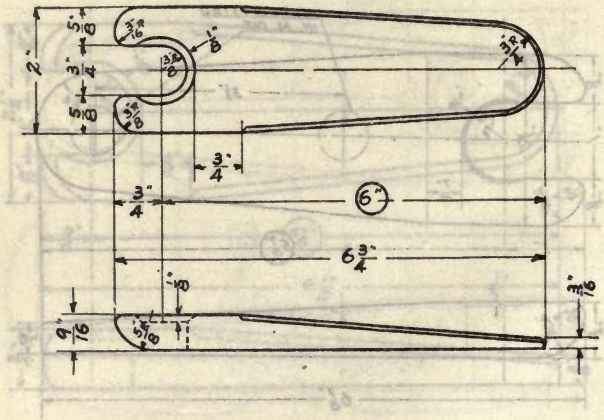

DOG, FLAT, 6″

Weight (steel), 1.38 lbs. **Die number, 1607-Y**
Former die number, (296)

NOT STANDARD STOCK

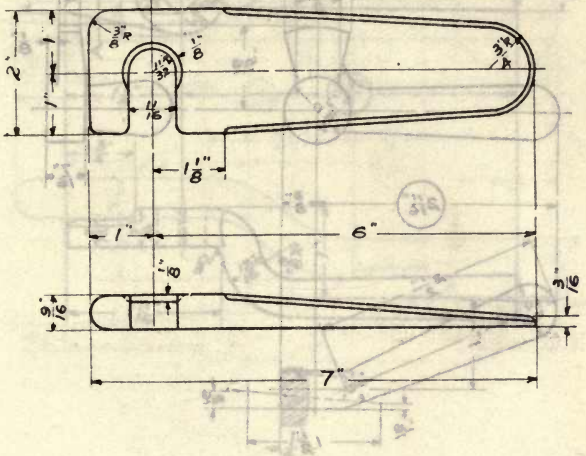

DOG, FLAT, 6″

Weight (steel), 1.5 lbs. **Die number, 1608-Y**
Former die number, (295)

NOT STANDARD STOCK

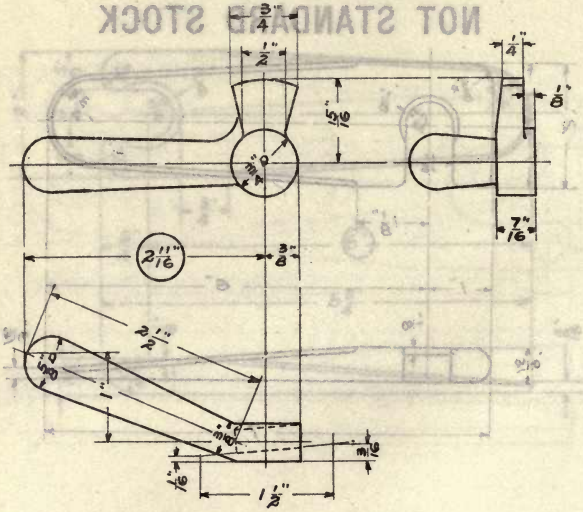

DOG, HANDLED, 2 11/16″

Weight, **lbs.** **Die number, 1609-M**
Former die number, (4-64)

NOT STANDARD STOCK

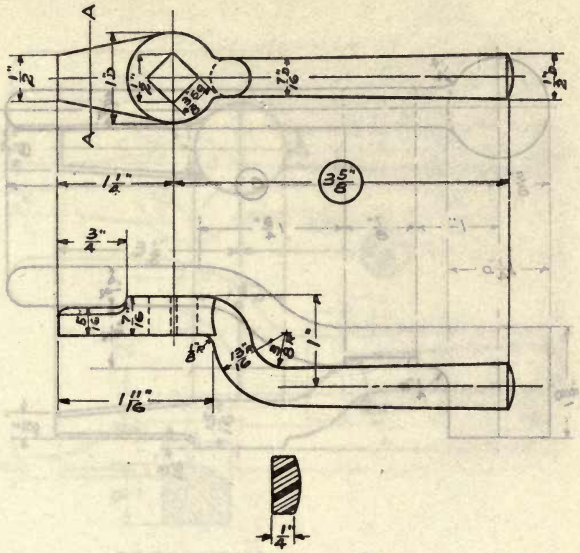

SECTION AT AA.

DOG, HANDLED, 3 5/8″

Weight (steel), 0.38 lb. Die number, 1610-N
Former die number, (3-101)

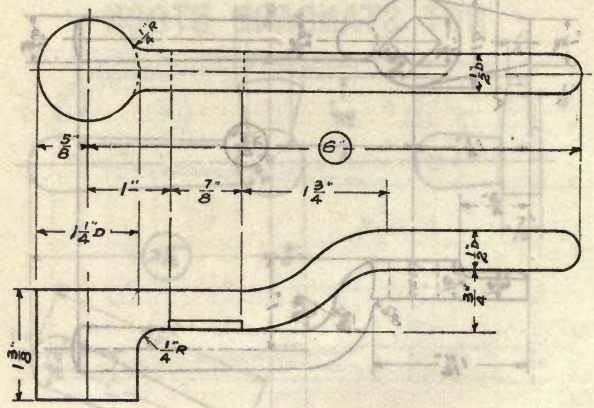

DOG, HANDLED, 6″

Weight (steel), 0.84 lb. **Die number, 1611-BY**
Former die numbers, (126), (58)

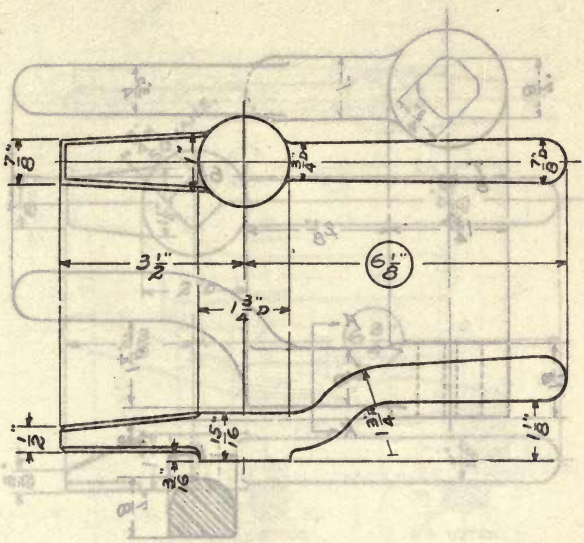

DOG, HANDLED, 6 1/8″

Weight (steel), 1.88 lbs. **Die number, 1612-Y**
Former die number, (75)

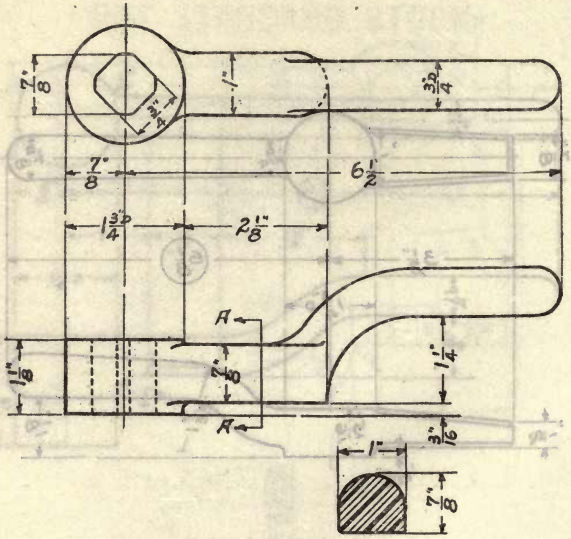

SECTION AT R.R.

DOG, HANDLED, 6 1/2″

Weight (steel), 2.0 lbs. **Die number, 1613-N**
Former die number, (3-57)

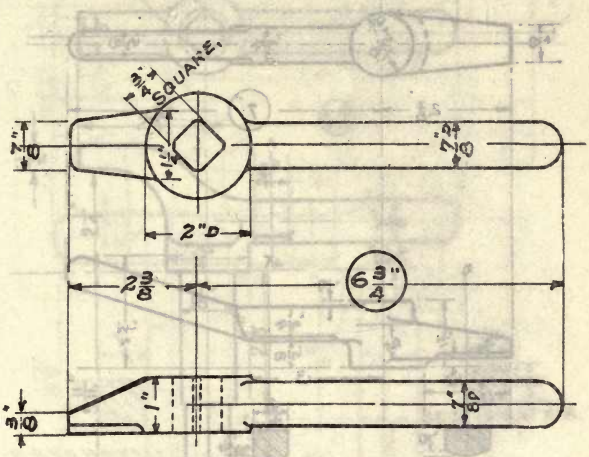

DOG, HANDLED, 6 3/4″

Weight (steel), 2.25 lbs. Die number, 1614-NBY
Former die numbers, (4-13) (60) (76)

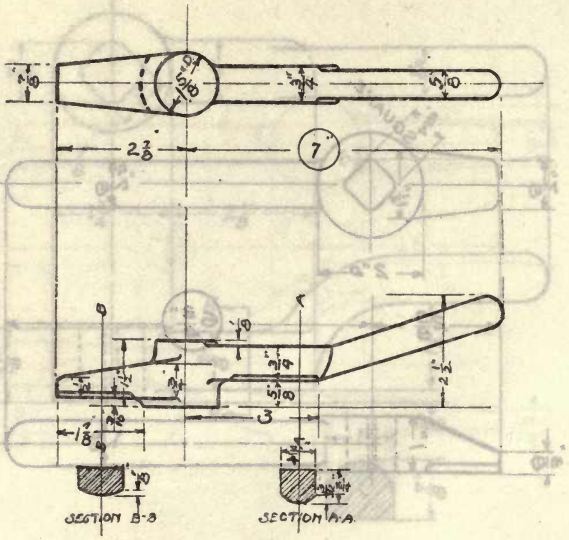

DOG, HANDLED, 7″

Weight (steel), 3.0 lbs. **Die number, 1615-N**
Former die number, (3-103)

NOT STANDARD STOCK

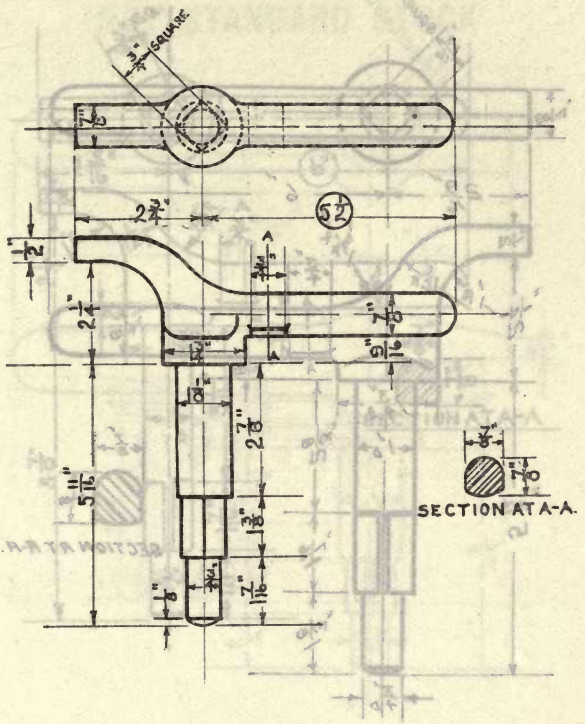

DOG, HANDLED, WITH SPINDLE, 5 1/2″

Weight (steel), 3.3 lbs. **Die number, 1616-B**
Former die number, (41)

NOT STANDARD STOCK

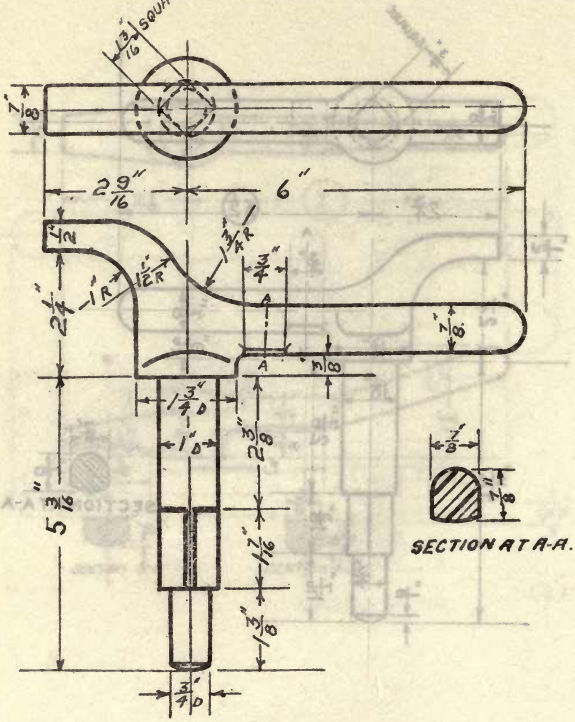

DOG, HANDLED, WITH SPINDLE, 6″

Weight (steel), 3.0 lbs. **Die number, 1617-Y**
Former die number, (72)

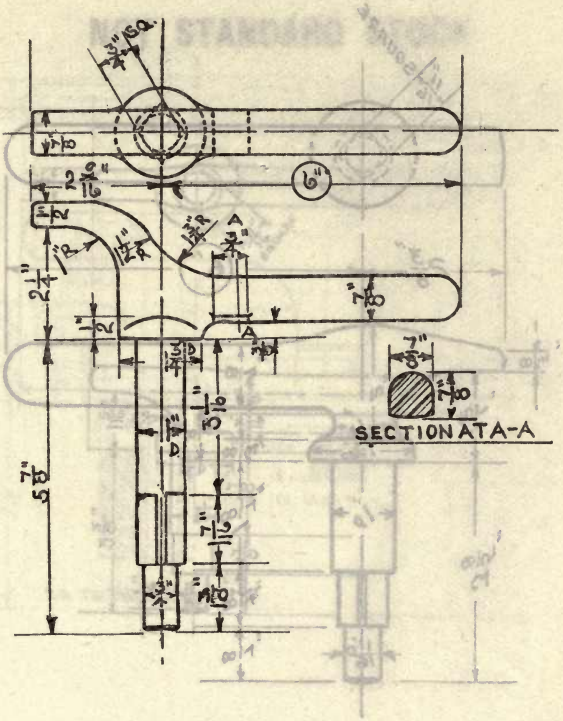

DOG, HANDLED, WITH SPINDLE, 6″

Weight (steel), 3.31 lbs. **Die number, 1618-PNMY**
Former die numbers, (234) (4-11) (4-11) (80)

NOT STANDARD STOCK

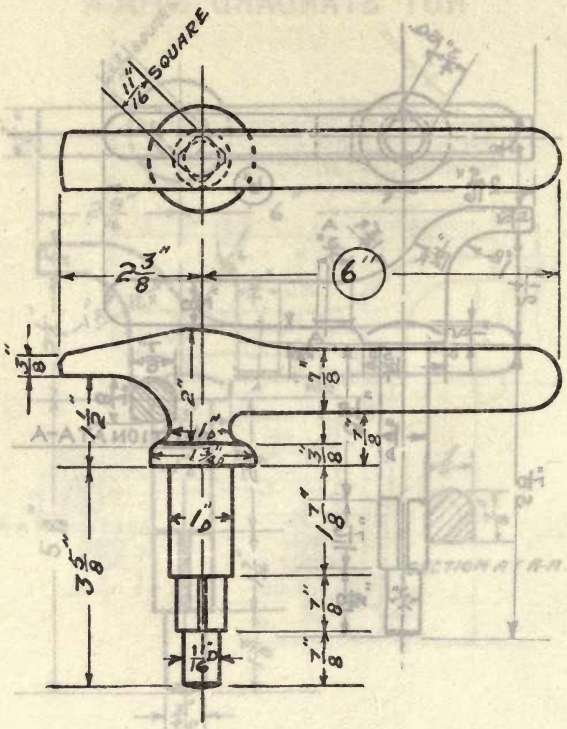

DOG, HANDLED, WITH SPINDLE, 6″

Weight (steel), 2.0 lbs. Die number, 1619-N
Former die number, (3-16)

NOT STANDARD STOCK

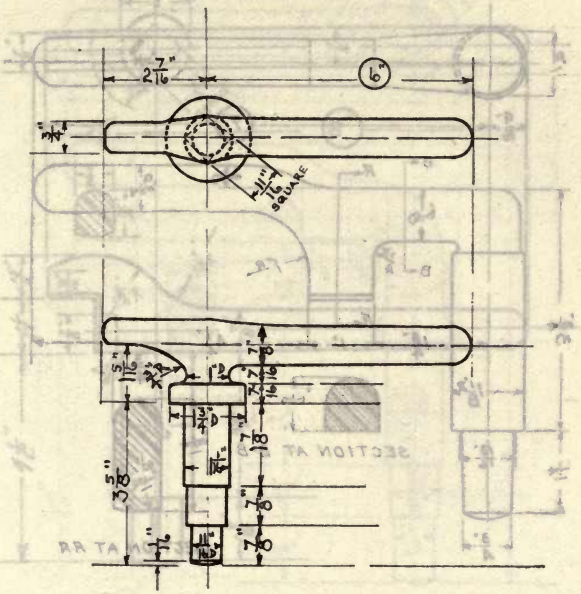

DOG, HANDLED, WITH SPINDLE, 6″

Weight, **lbs.** **Die number, 1620-B**
Former die number, (329)

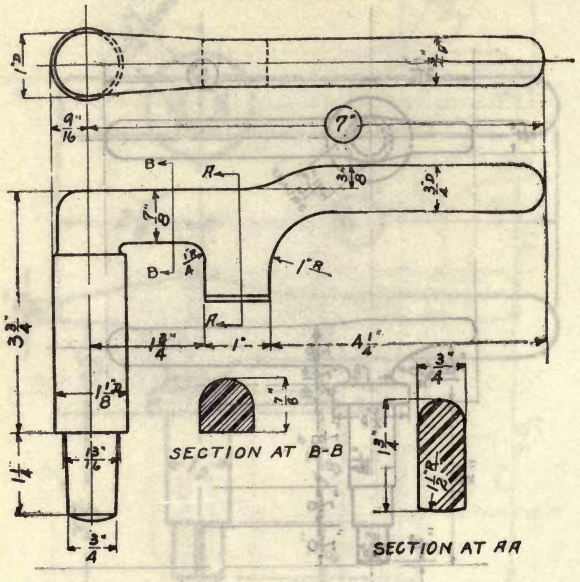

DOG, HANDLED, WITH SPINDLE, 7"

Weight, lbs. **Die number, 1621-YM**
Former die number, (255)

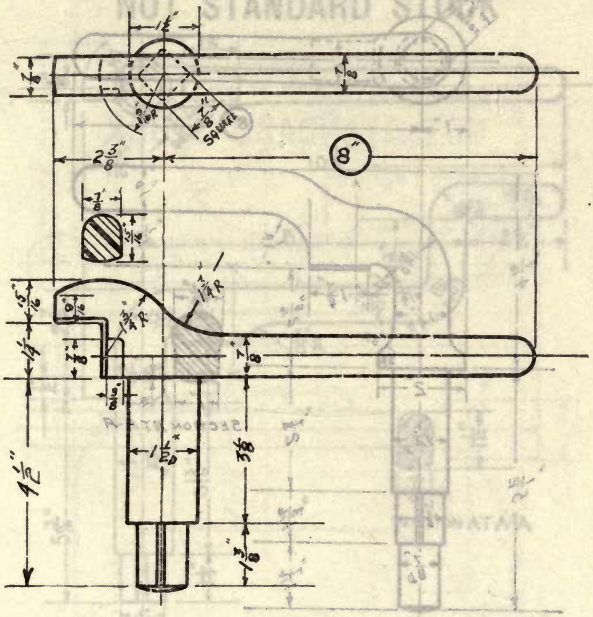

DOG, HANDLED, WITH SPINDLE, 8″

Weight (steel), 4.5 lbs. **Die number, 1622-YM**
Former die number, (60)

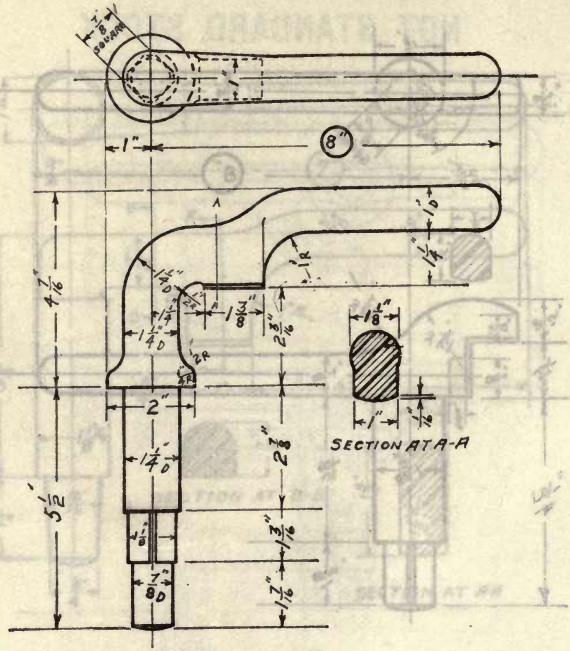

DOG, HANDLE, WITH SPINDLE, 8"

Weight (steel), 5.0 lbs. **Die number, 1623-Y**
Former die number, (79)

NOT STANDARD STOCK

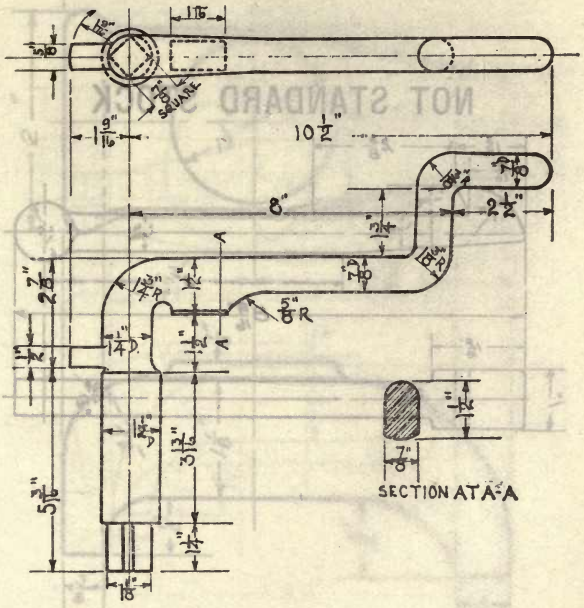

DOG, HANDLED, WITH SPINDLE, 10 1/2″

Weight (steel), 6.0 lbs. **Die number, 1624-Y**
Former die number, (69)

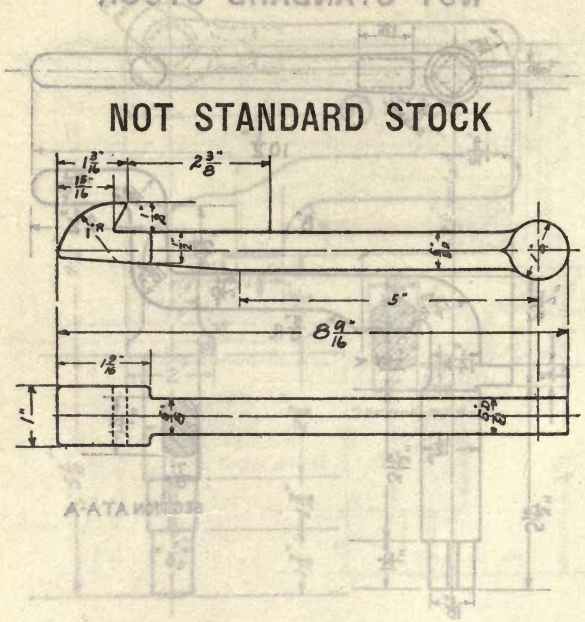

DOG, LATCH,

For 7" Gun Port Shutters

Weight (steel), 1.06 lbs. **Die number, 1625-Y**
Former die number, (352)

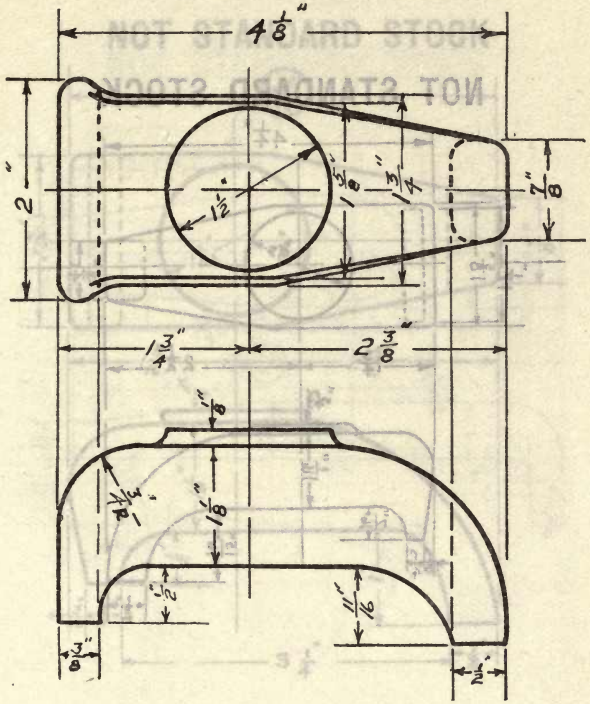

DOG, PORT, CARGO, 4 1/8″

Weight (steel), 2.12 lbs. **Die number, 1626-Y**
Former die number, (71)

NOT STANDARD STOCK

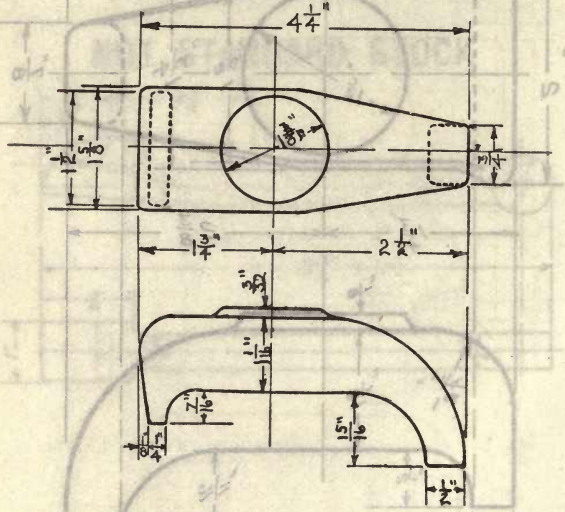

DOG, PORT, CARGO, 4 1/4″

Weight, lbs. **Die number, 1627-B**
Former die number, (53)

NOT STANDARD STOCK

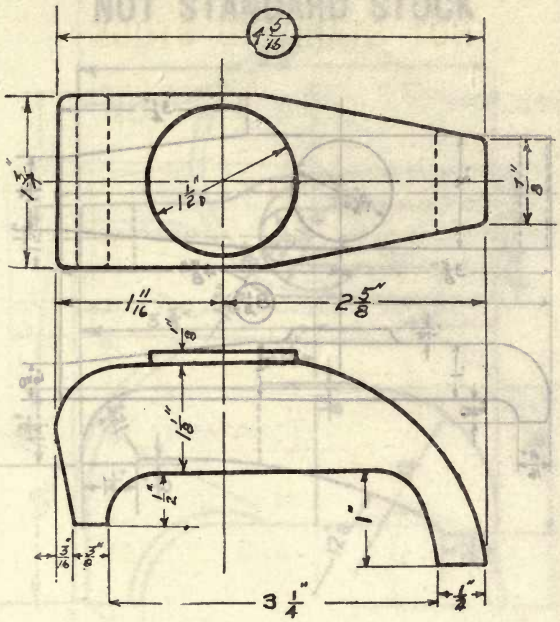

DOG, PORT, CARGO, 4 5/16″

Weight (steel), 1.0 lb. **Die number, 1628-N**
Former die number, (3-10)

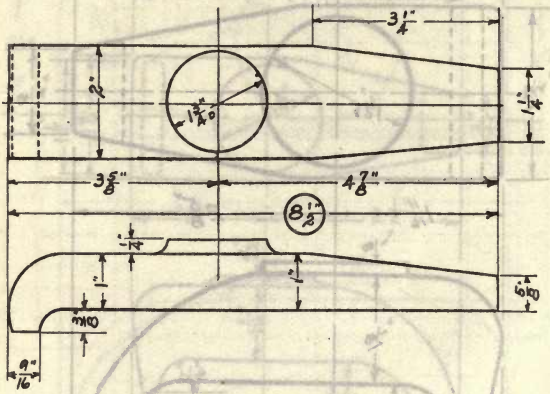

DOG, PORT, CARGO, 8 1/2″

Weight (steel), 4.44 lbs. **Die number, 1629-Y**
Former die number, (74)

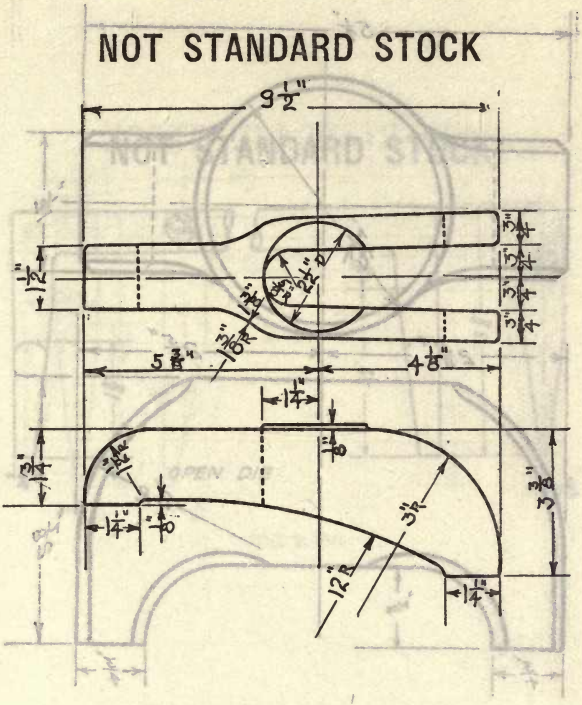

DOG, PORT, CARGO, 9 1/2″

Weight, lbs. **Die number, 1630-B**
Former die number, (320)

NOT STANDARD STOCK

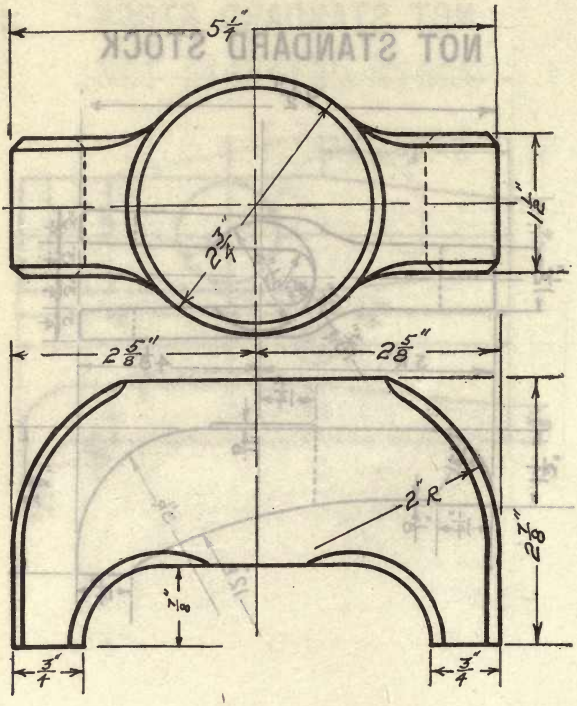

DOG, HATCH, ARMORED, 5 1/4″

Weight (steel), 6.0 lbs.

Die number, 1631-Y
Former die number, (70)

NOT STANDARD STOCK

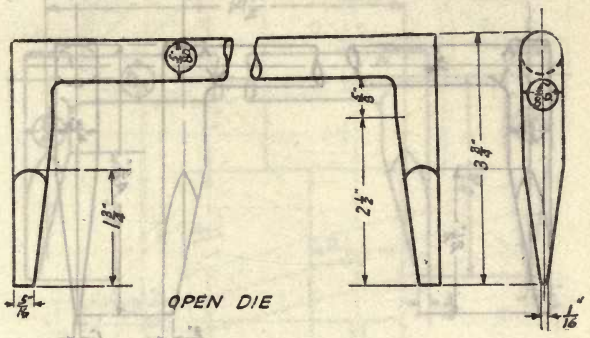

DOG, SHIPWRIGHTS, 5/8″

Weight, lbs. **Die number, 1632-Y**
Former die number, (73)

NOT STANDARD STOCK

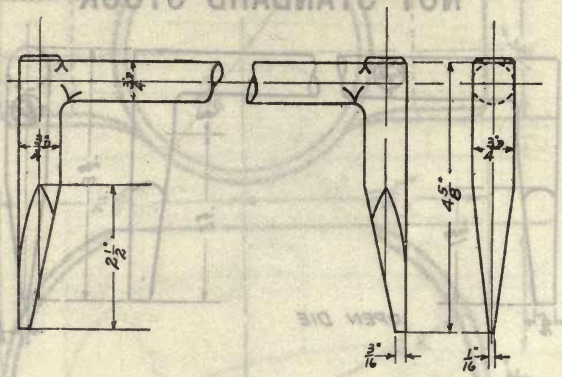

OPEN DIE

DOG, SHIPWRIGHTS, 3/4″

Weight, **lbs.** **Die number, 1633-M**
Former die number, (9-17)

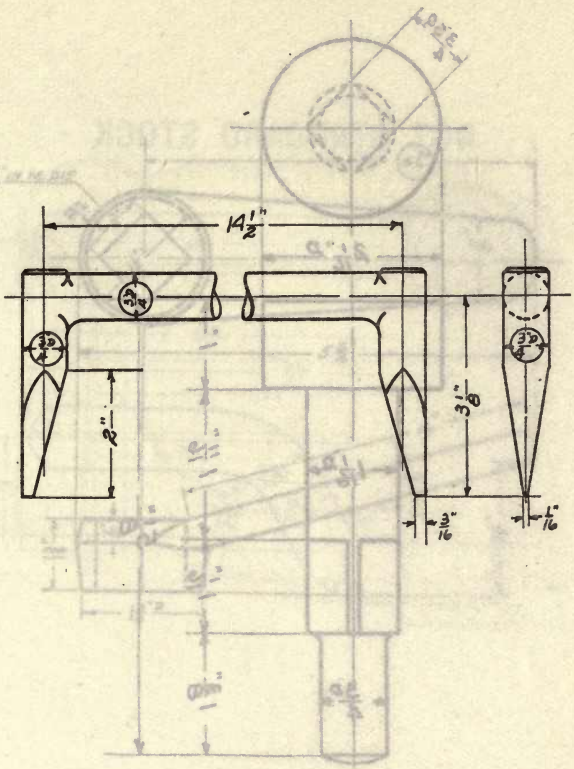

DOG, SHIPWRIGHTS, 3/4″

Weight, lbs. **Die number, 1634-B**
Former die number, (146)

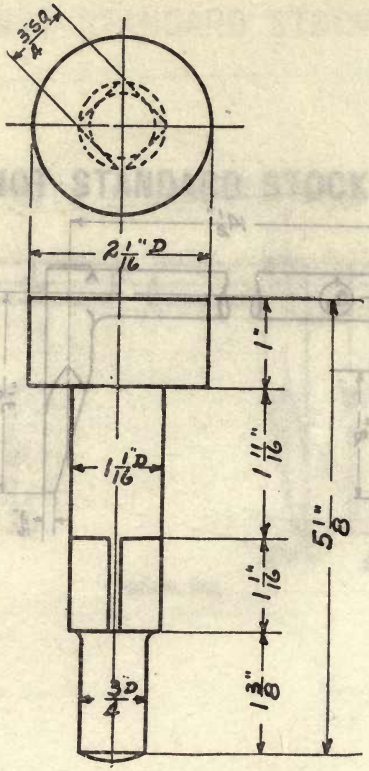

BOLT, DOG

Weight (steel), 1.81 lbs. Die number, 1635-BY
Former die numbers, (61) (239)

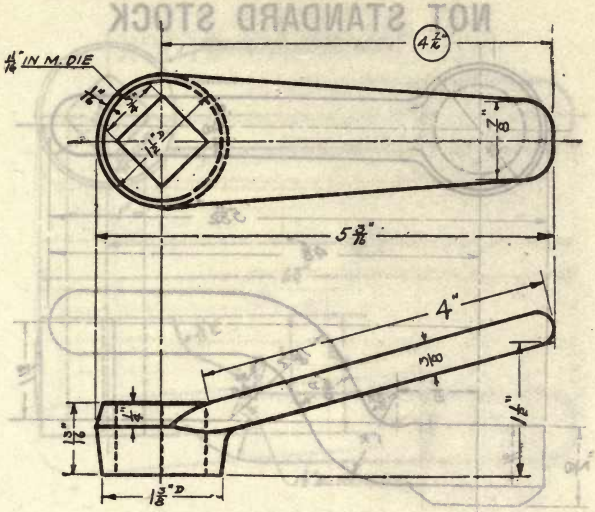

HANDLE, DOG, 4 7/16″

Weight (steel), 0.88 lb. **Die number, 1636-YMN**
Former die numbers, (1123) (12-5) (3-74)

NOT STANDARD STOCK

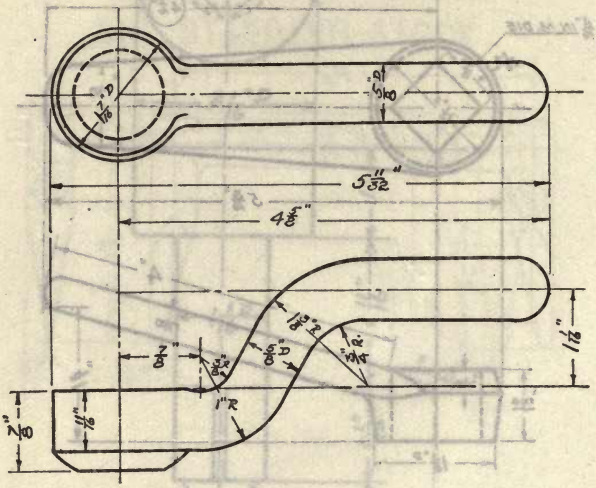

HANDLE, DOG, 4 5/8″

Weight (steel), 1.0 lb. **Die number, 1637-B**
Former die number, (130)

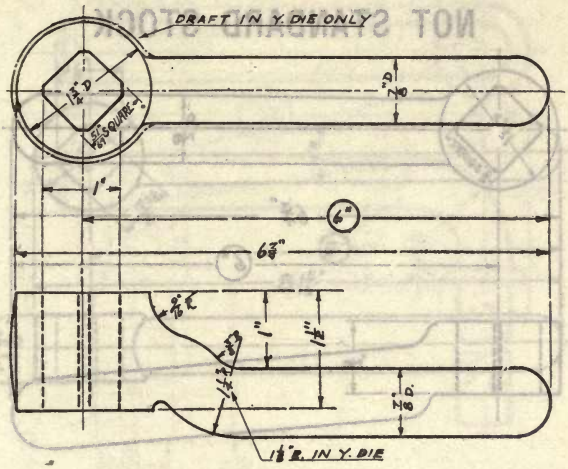

HANDLE, DOG, 6″

Weight (steel), 1.8 lbs. **Die number, 1638-BPYNM**
Former die numbers, (40) (233) (106) (4-12) (4-12)

NOT STANDARD STOCK

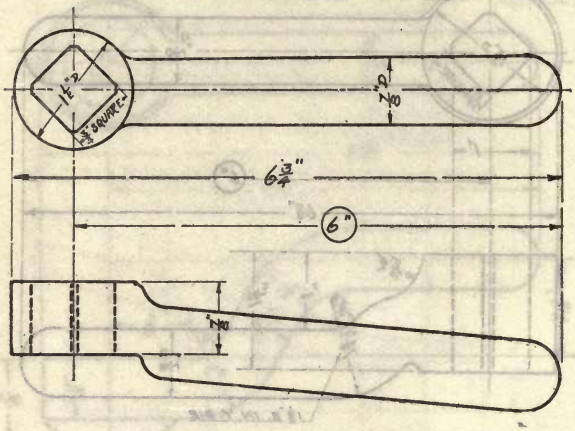

HANDLE, DOG, 6″

Weight (steel), 2.0 lbs. **Die numbers, 1639-N**
Former die number, (3-17)

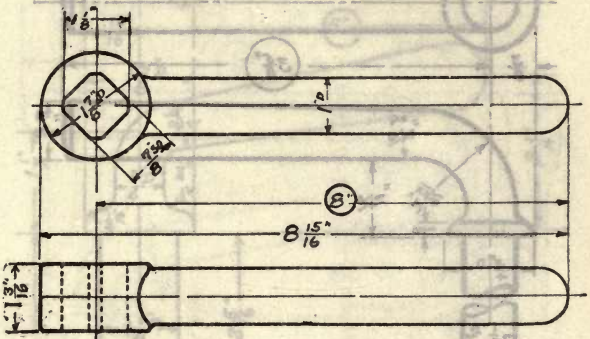

HANDLE, DOG, 8″

Weight (steel), 2.44 lbs. **Die number, 1640-YM**
Former die number, (78)

NOT STANDARD STOCK

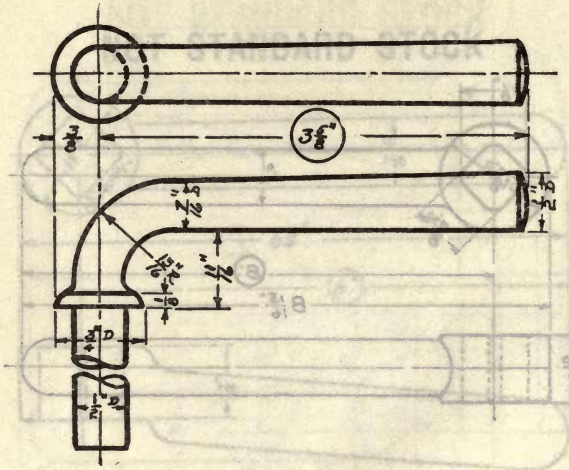

OPEN DIE.

HANDLE, DOG, WITH SPINDLE, 3 5/8″

Weight, lbs. **Die number, 1641-N**
Former die number, (3-102)

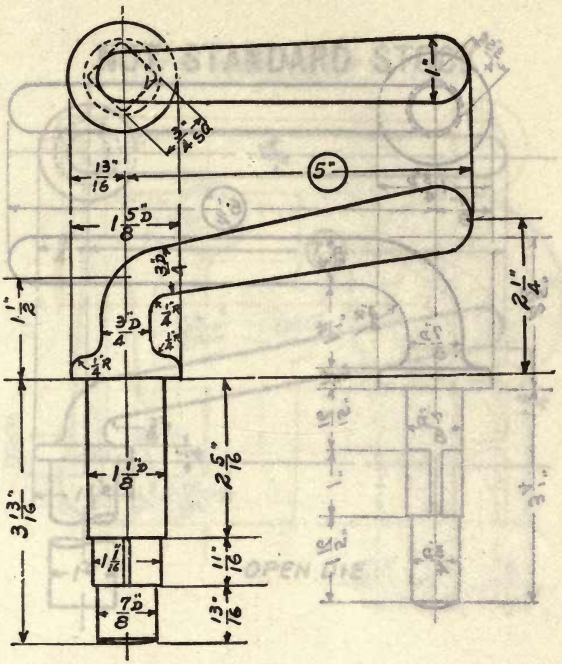

HANDLE, DOG, WITH SPINDLE, 5″

Weight, lbs. **Die number, 1642-Y**
Former die number, (1128)

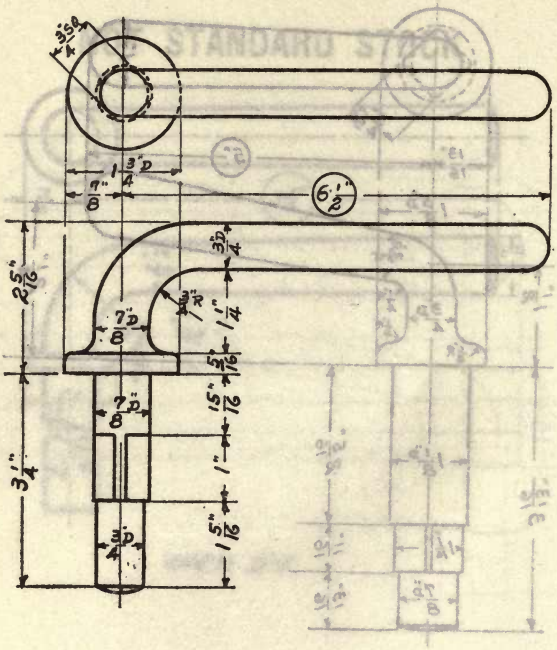

HANDLE, DOG, WITH SPINDLE, 6 1/2″

Weight (steel), 3.0 lbs. **Die number, 1643-N**
Former die number, (3-56)

NOT STANDARD STOCK

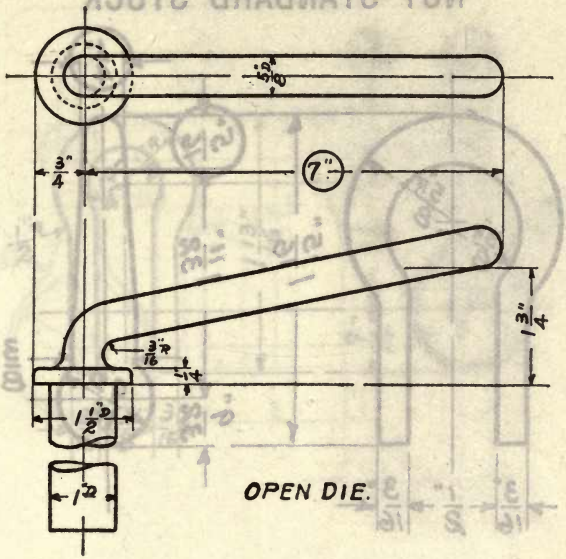

HANDLE, DOG, WITH SPINDLE, 7″

Weight, lbs. **Die number, 1644-N**
Former die number, (3-104)

NOT STANDARD STOCK

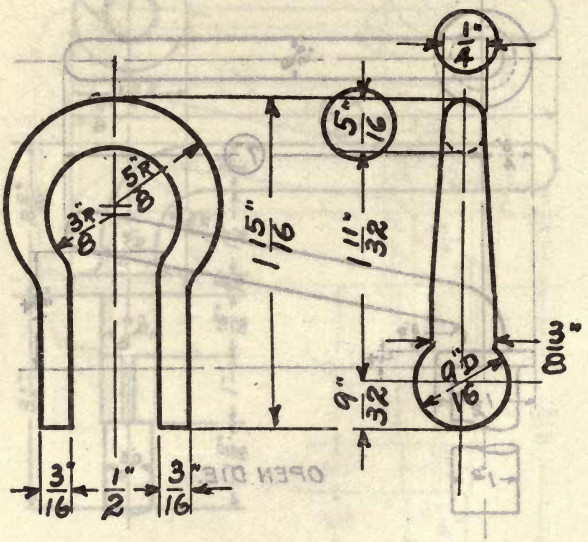

SHACKLE, REGULAR 1/4″ x 5/16″

Weight, **lbs.** **Die number, 1645-N**
Former die number, (7-1)

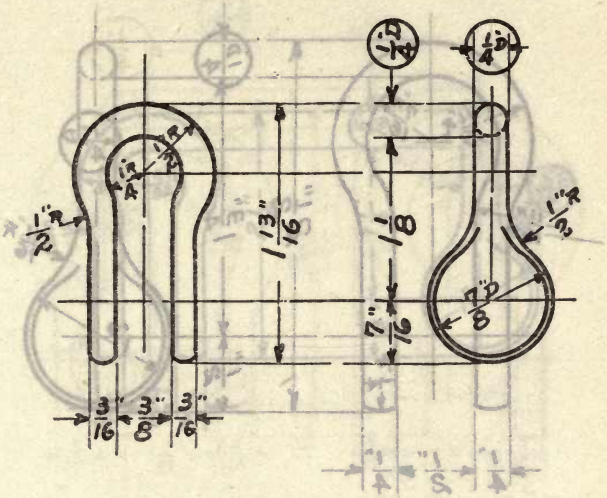

SHACKLE, REGULAR 1/4″

Weight, lbs. **Die number, 1646-N**
Former die number, (7-13)

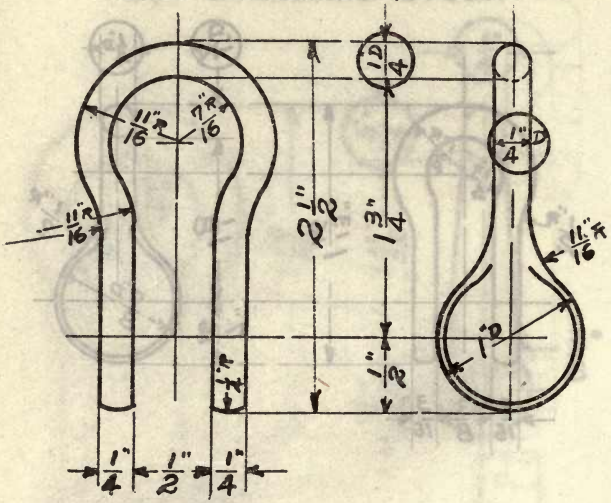

SHACKLE, REGULAR 1/4″

Weight (steel), 0.20 lb. **Die number, 1647-Y**
Former die number, (434)

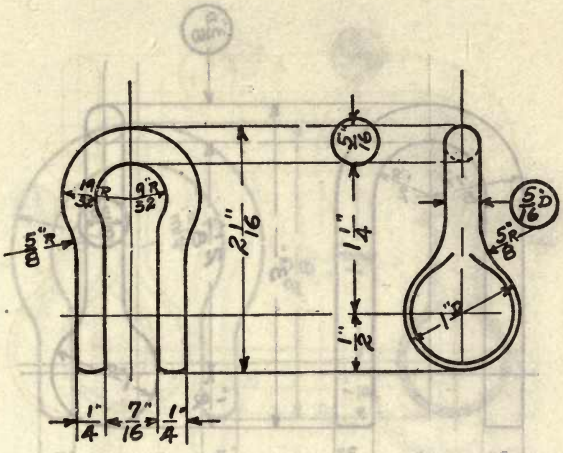

SHACKLE, REGULAR 5/16″

Weight, **lbs.** **Die number, 1648-N**
Former die number, (7-14)

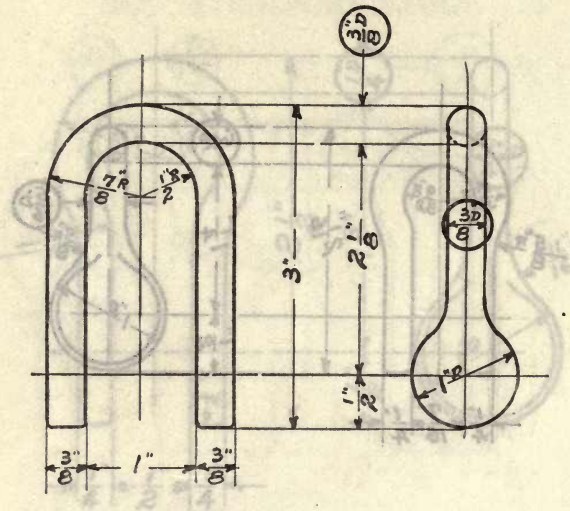

SHACKLE, REGULAR 3/8″

Weight, lbs. **Die number, 1649-N**
Former die number, (7-35)

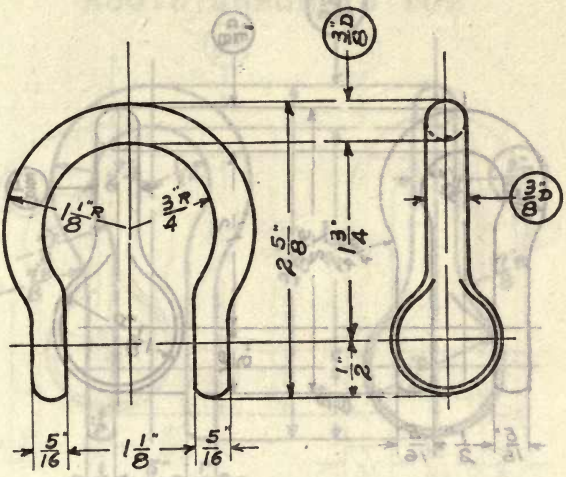

SHACKLE, REGULAR 3/8″

Weight, lbs. **Die number, 1650-M**
Former die number, (3-47)

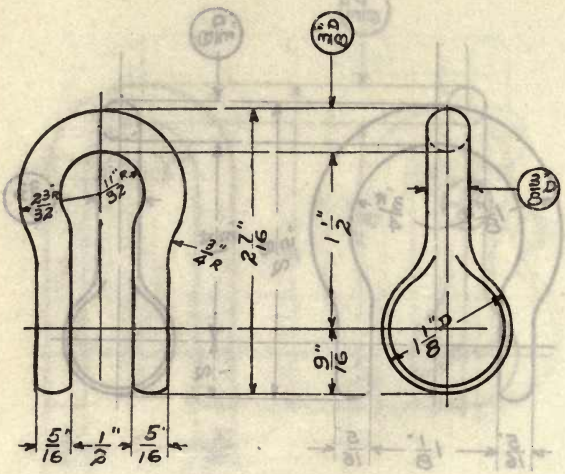

SHACKLE, REGULAR 3/8″

Weight (steel), 3.0 lbs. Die number, 1651-NM
Former die number, (7-15)

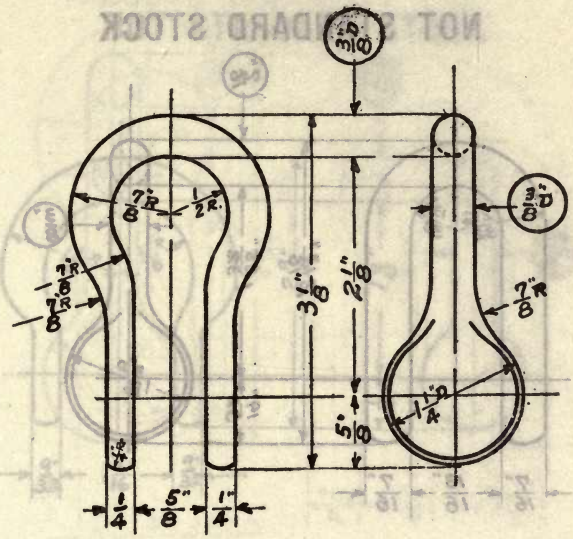

SHACKLE, REGULAR 3/8″

Weight (steel), 0.62 lb. **Die number, 1652-Y**
Former die number, (435)

NOT STANDARD STOCK

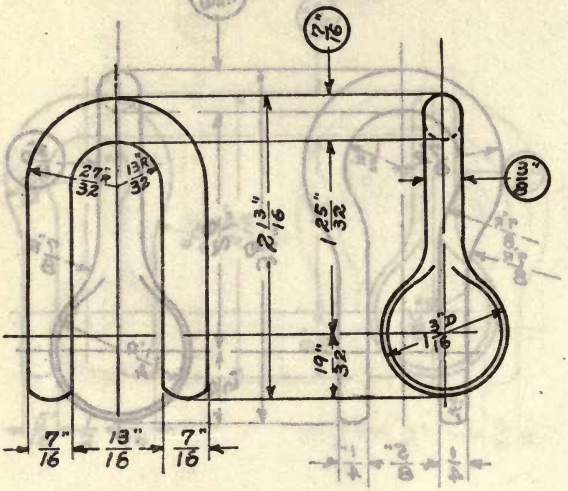

SHACKLE, REGULAR 3/8″ x 7/16″

Weight, lbs. **Die number, 1653-B**
Former die number, (33)

NOT STANDARD STOCK

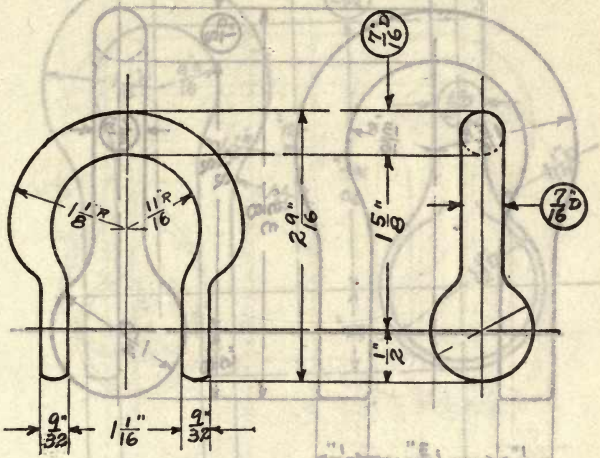

SHACKLE, REGULAR 7/16″

Weight (steel), 0.28 lb. Die number, 1654-P
Former die number, (391)

NOT STANDARD STOCK

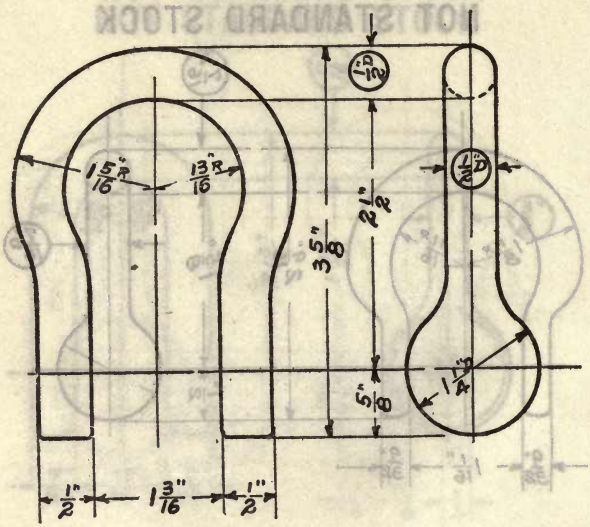

SHACKLE, REGULAR 1/2″

Weight, lbs. **Die number, 1655-N**
Former die number, (7-34)

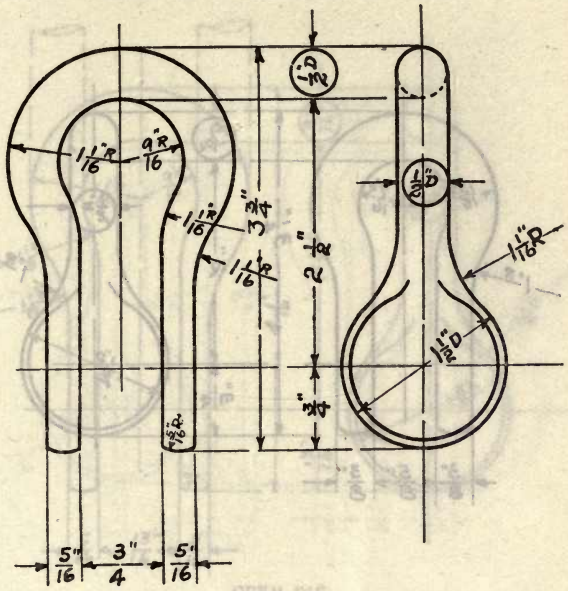

SHACKLE, REGULAR 1/2″

Weight (steel), 0.66 lb. **Die number, 1656-YM**
Former die number, (437)

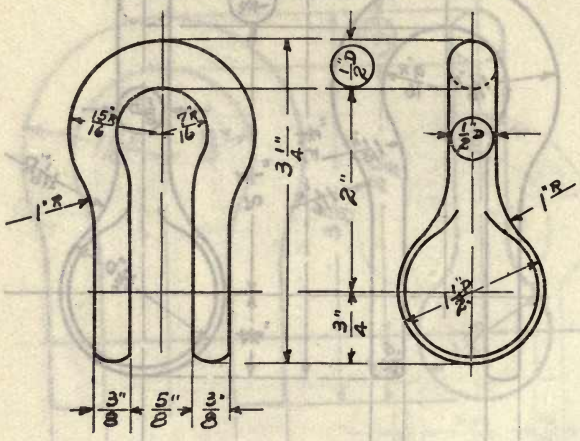

SHACKLE, REGULAR 1/2″

Weight, **lbs.** **Die number, 1657-N**
Former die number, (7-16)

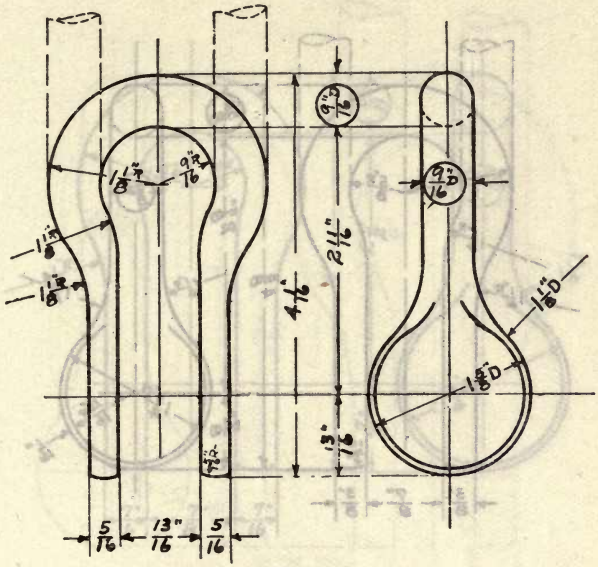

OPEN DIE

SHACKLE, REGULAR 9/16″

Weight (steel), 1.5 lbs. **Die number, 1658-Y**
Former die number, (438)

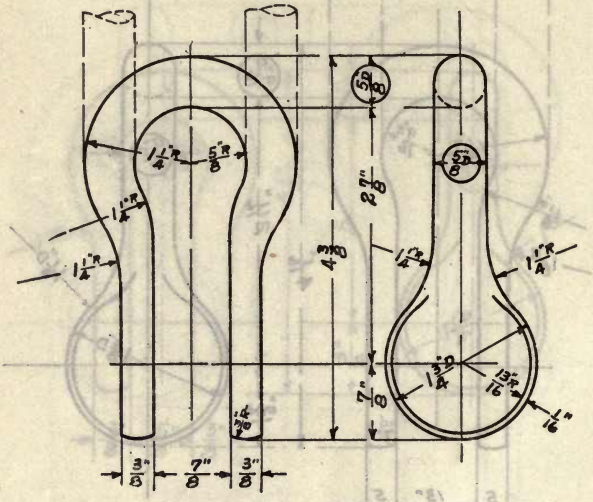

SHACKLE, REGULAR 5/8″

Weight (steel), 1.75 lbs. **Die number, 1659-YM**
Former die number, (439)

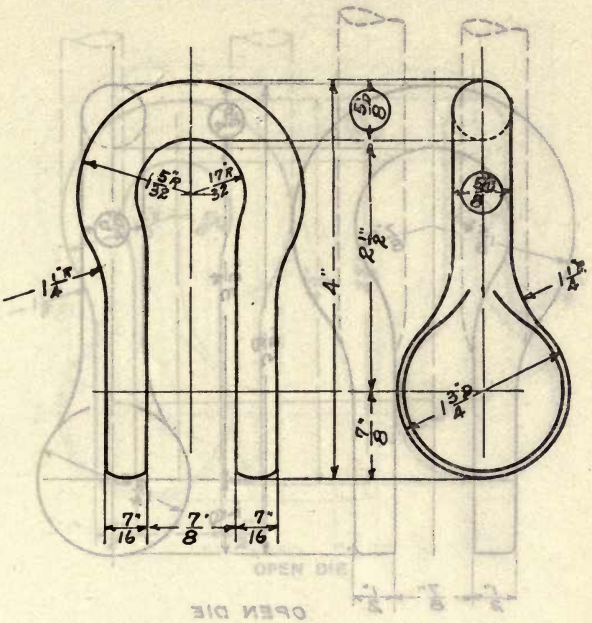

SHACKLE, REGULAR 5/8″

Weight (steel), 1.5 lbs. **Die number, 1660-N**
Former die number, (7-17)

NOT STANDARD STOCK

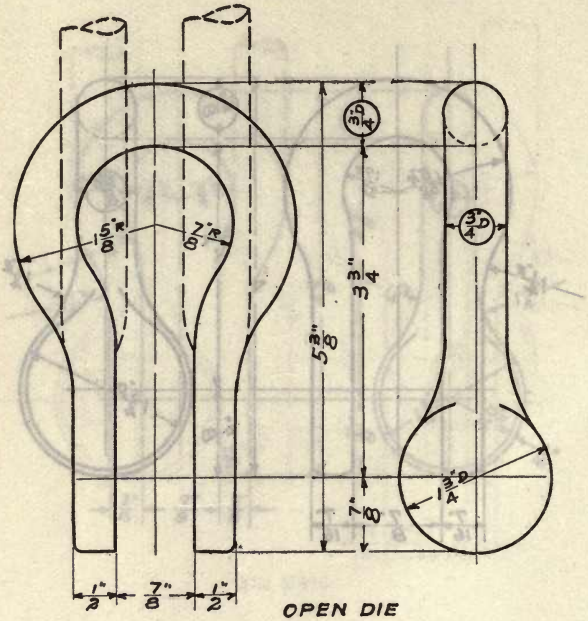

OPEN DIE

SHACKLE, REGULAR 3/4″

Weight (steel), 0.94 lb. **Die number 1661-YM**
Former die number, (345)

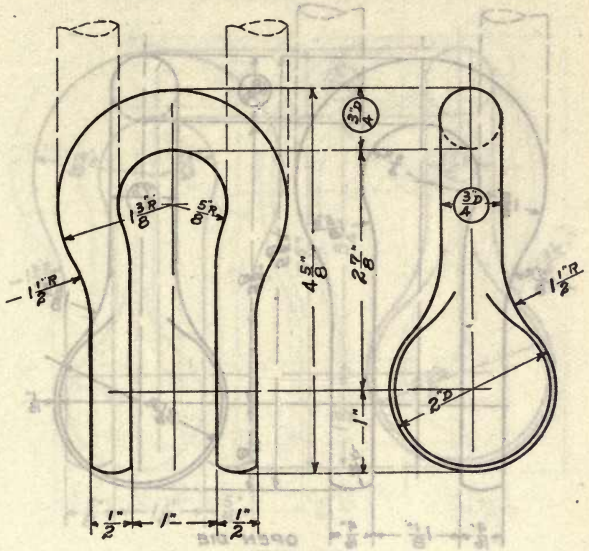

OPEN DIE

SHACKLE, REGULAR 3/4″

Weight, lbs. **Die number, 1662-B**
Former die number, (331)

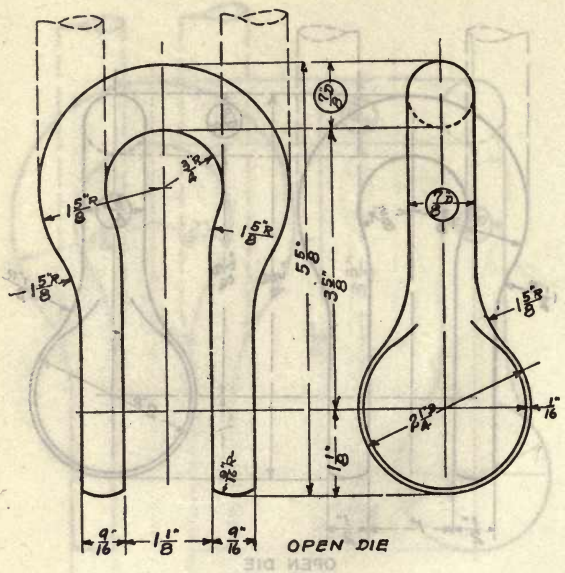

SHACKLE, REGULAR 7/8″

Weight, **lbs.** **Die number, 1663-YM**
Former die number, (443)

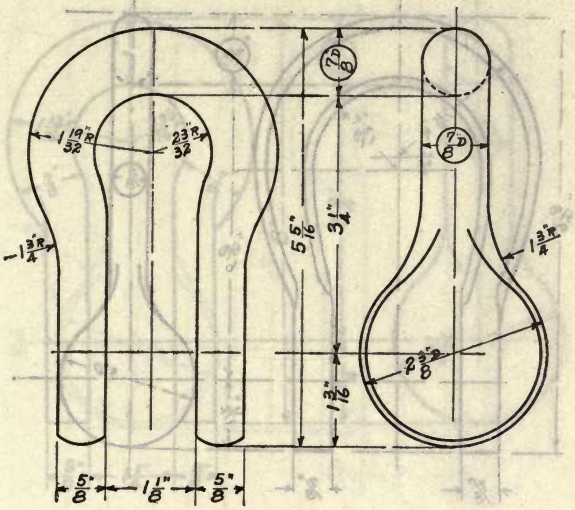

SHACKLE, REGULAR 7/8″

Weight (steel), 3.0 lbs. **Die number, 1664-N**
Former die number, (7-19)

NOT STANDARD STOCK

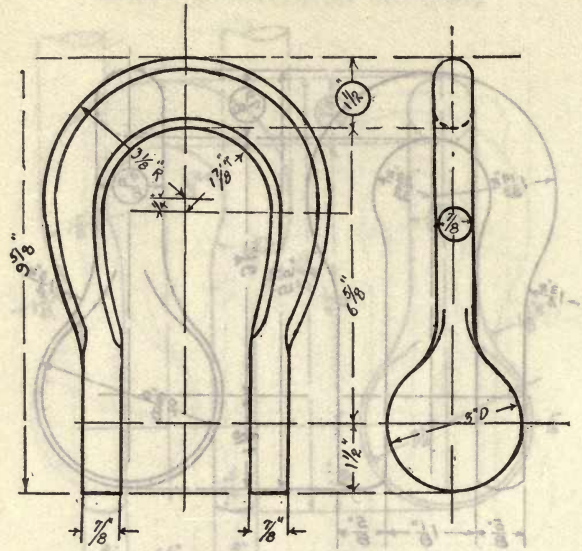

SHACKLE, REGULAR 7/8″ X 1 1/2″

Nonstandard

For standard shackle see die No. 1679

Weight, lbs. Die number, 1665-N
Former die number, (7-11)

NOT STANDARD STOCK

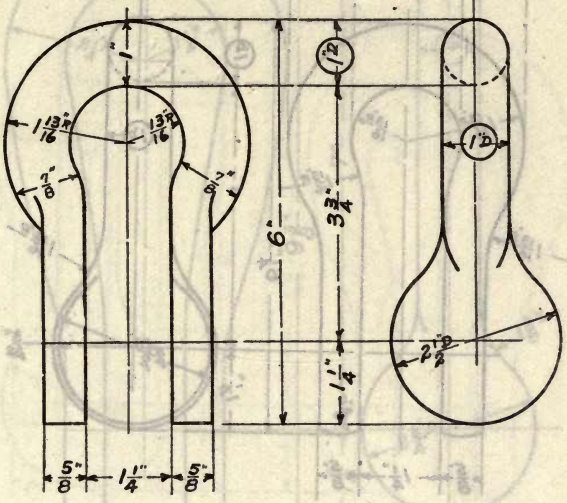

SHACKLE, REGULAR 1″

Weight (steel), 3.25 lbs. **Die number, 1666-Y**
Former die number, (203)

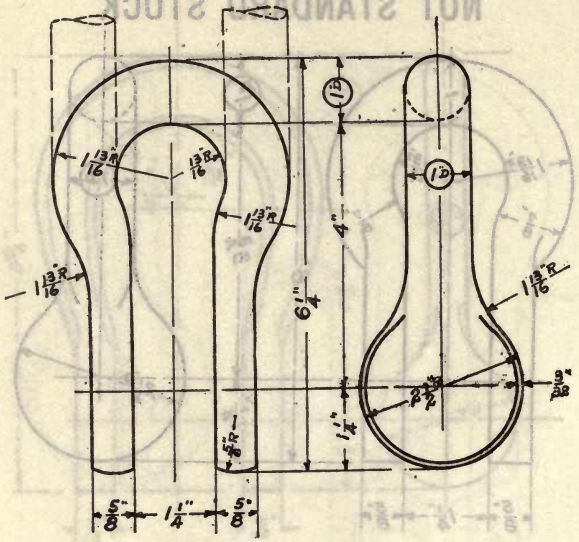

OPEN DIE

SHACKLE, REGULAR 1″

Weight (steel), **lbs.** **Die number, 1667-YM**
Former die number, (445)

NOT STANDARD STOCK

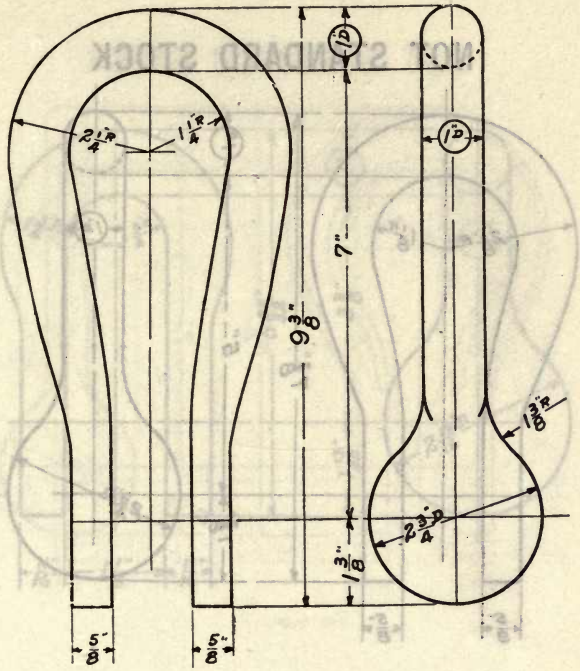

SHACKLE, REGULAR 1″

Nonstandard

For standard shackle see die No. 1669

Weight, lbs. **Die number, 1668-N**
Former die number, (7-9)

NOT STANDARD STOCK

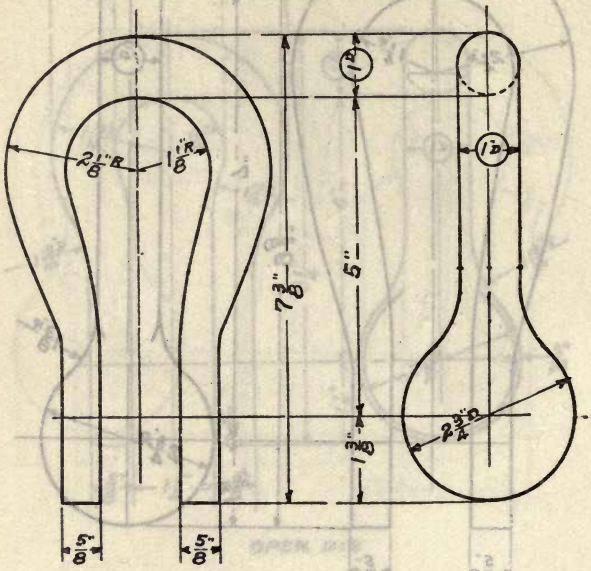

SHACKLE, REGULAR 1″

Weight, lbs. **Die number, 1669-N**
Former die number, (7-10)

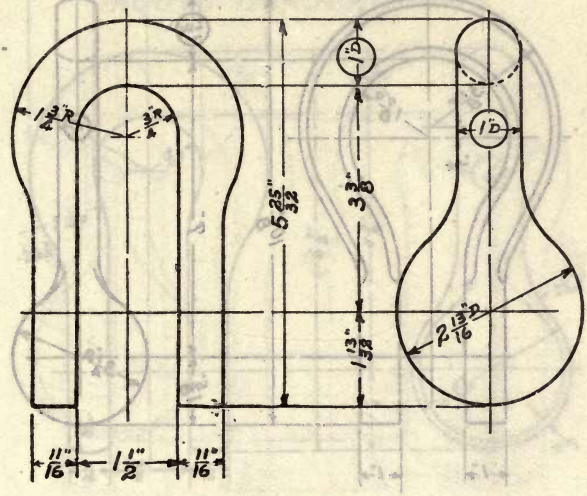

SHACKLE, REGULAR 1″

Weight, lbs. **Die number, 1670-N**
Former die number, (7-33)

NOT STANDARD STOCK

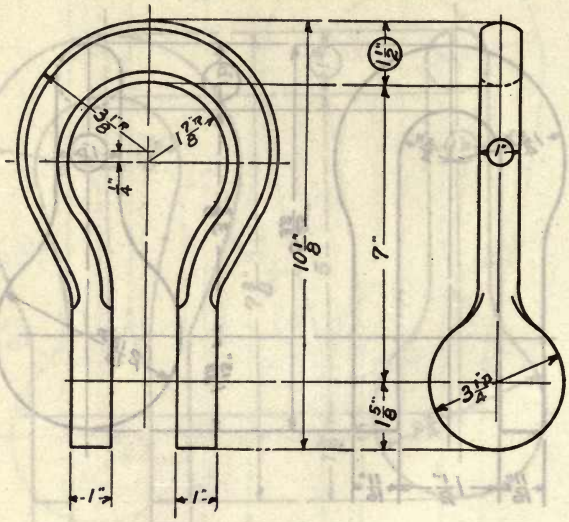

SHACKLE, REGULAR 1″ x 1 1/2″

Nonstandard

For standard shackle see die No. 1679

Weight, lbs. **Die number, 1671-N**
Former die number, (7-7)

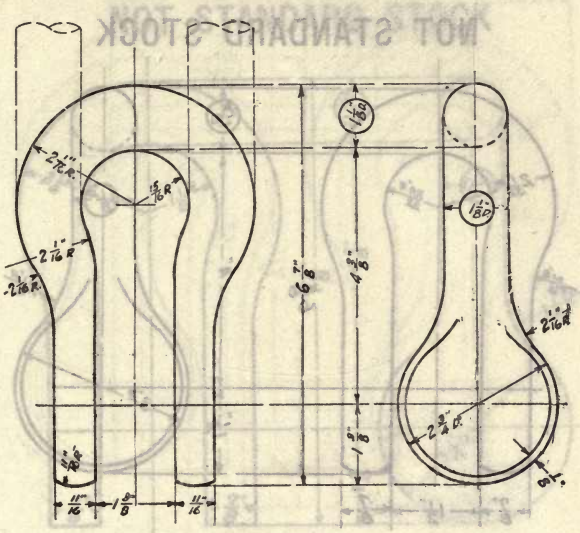

SHACKLE, REGULAR 1 1/8″

Weight (steel), 6.5 lbs.

Die number, 1672-YM
Former die number, (447)

NOT STANDARD STOCK

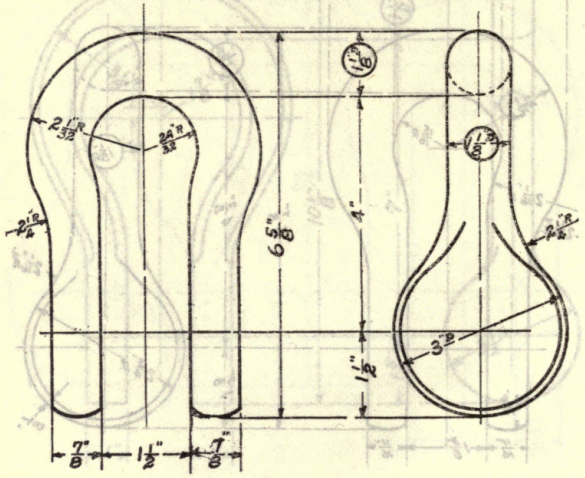

SHACKLE, REGULAR 1 1/8″

Weight, lbs. **Die number, 1673-N**
Former die number, (7-21)

NOT STANDARD STOCK

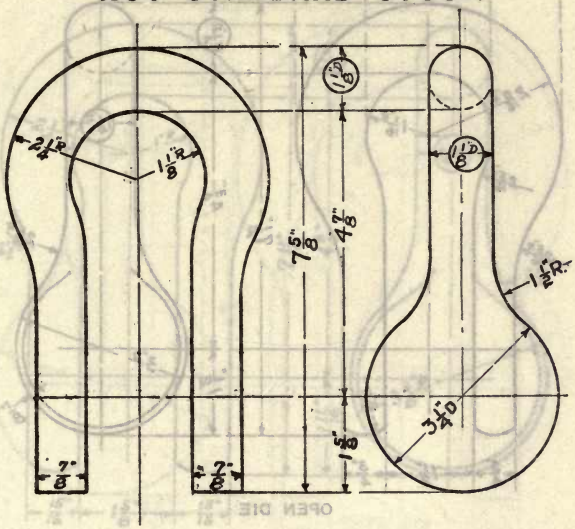

SHACKLE, REGULAR 1 1/8″

Weight, **lbs.** **Die number, 1674-B**
Former die number, (260)

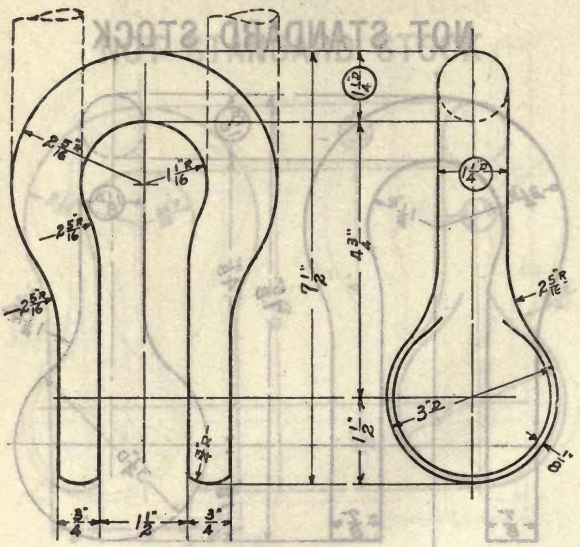

OPEN DIE

SHACKLE, REGULAR 1 1/4″

Weight (steel), 5.75 lbs. **Die number, 1675-YM**
Former die number, (449)

NOT STANDARD STOCK

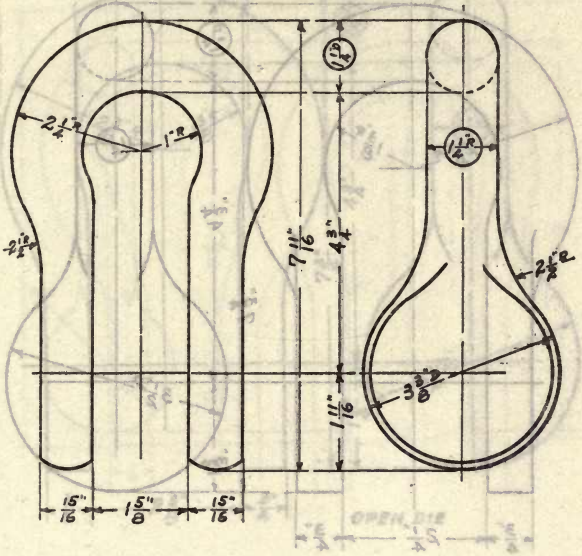

SHACKLE, REGULAR 1 1/4″

Weight, lbs. **Die number, 1676-N**
Former die number, (7-22)

NOT STANDARD STOCK

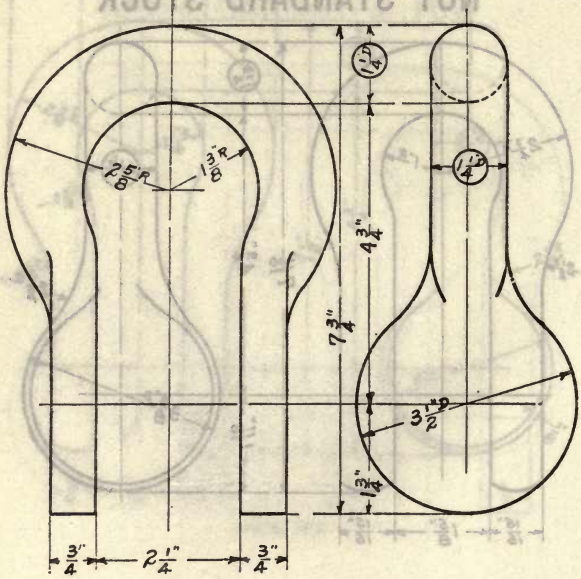

SHACKLE, REGULAR 1 1/4″

Weight, lbs. **Die number, 1677-N**
Former die number, (7-5)

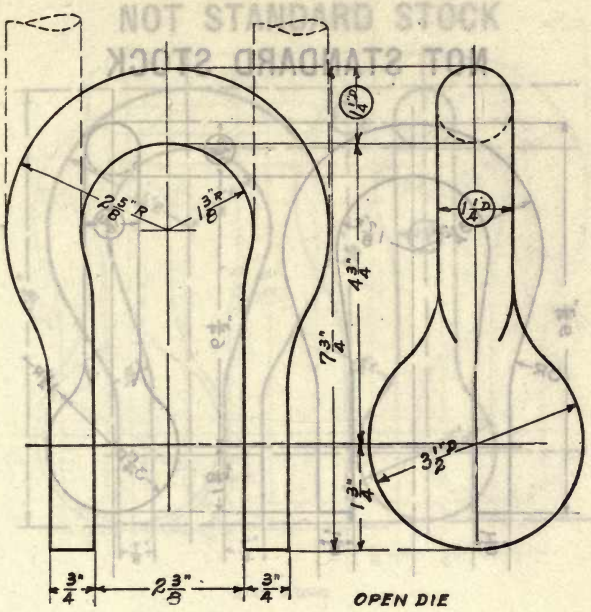

SHACKLE, REGULAR 1 1/4″

Weight (steel), 7.9 lbs. **Die number, 1678-B**
Former die number, (213)

NOT STANDARD STOCK

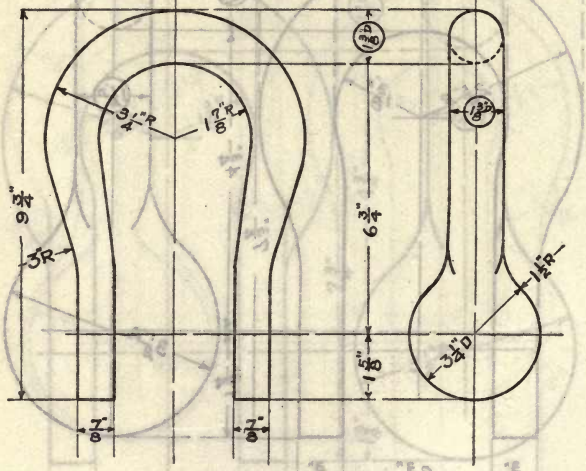

SHACKLE, REGULAR 1 3/8″

Weight (steel), 12.0 lbs. **Die number, 1679-N**
Former die number, (7-12)

NOT STANDARD STOCK

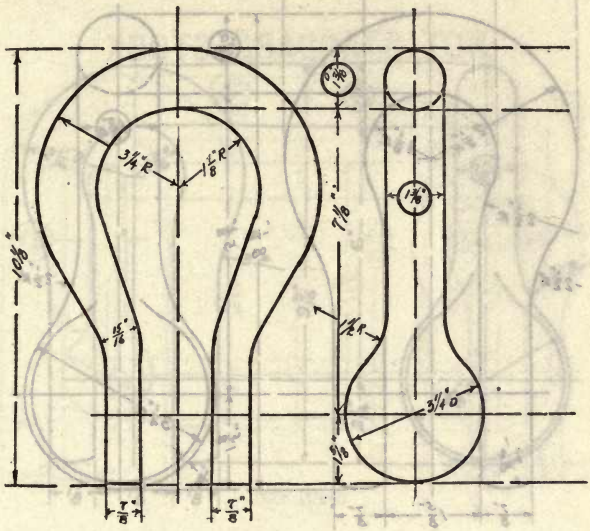

SHACKLE, REGULAR 1 3/8″

Nonstandard

For standard shackle see die No. 1679

Weight, lbs. **Die number, 1680-N**
Former die number, (7-8)

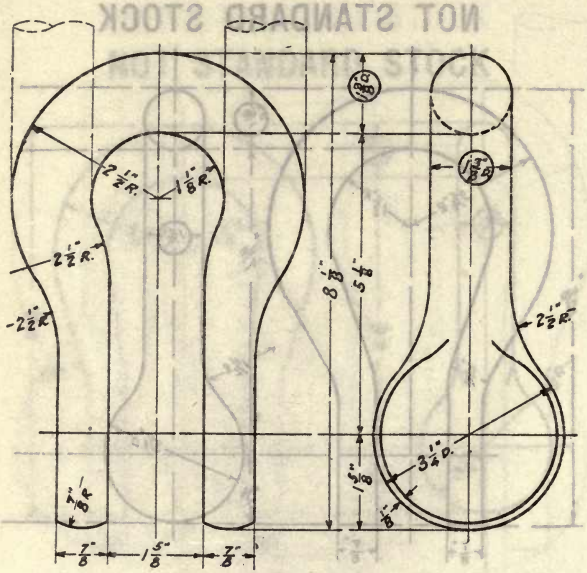

OPEN DIE

SHACKLE, REGULAR 1 3/8″

Weight (steel), 7.8 lbs. **Die number, 1681-Y**
Former die number, (451)

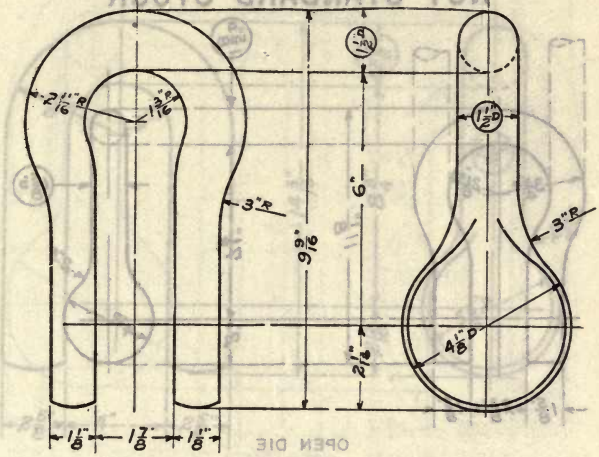

SHACKLE, REGULAR 1 1/2″

Weight (steel), 14.0 lbs. **Die number, 1682-N**
Former die number, (7-24)

NOT STANDARD STOCK

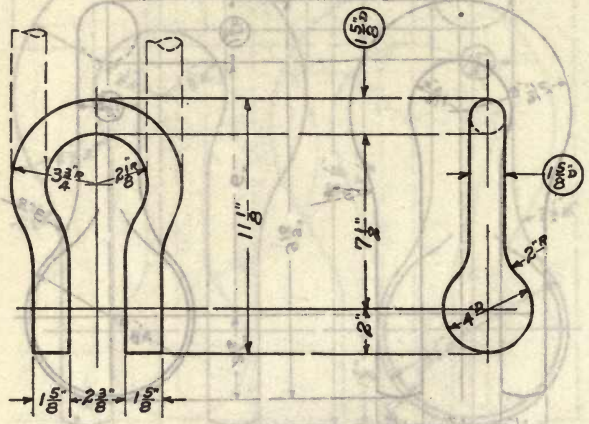

OPEN DIE

SHACKLE, CONNECTING, 1 5/8″

Used with towing gear for destroyers.

Weight, lbs. **Die number, 1683-B**
Former die number, (303)

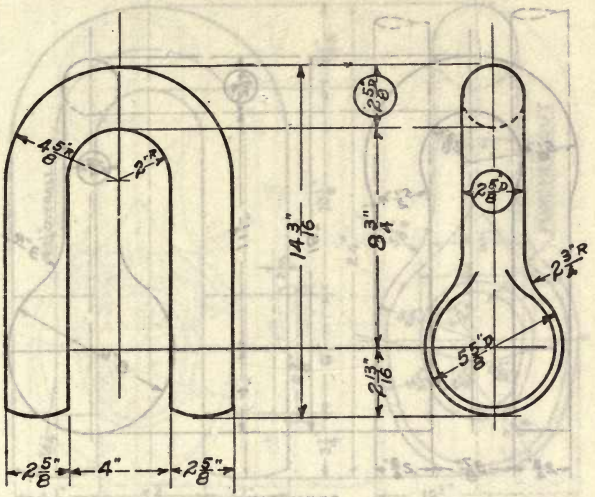

SHACKLE, CONNECTING, 2 5/8″

Used with housing chain stopper for 3 1/4″ and 3 1/2″ chain cable.

Weight, lbs. **Die number, 1684-B**
Former die number, (318)

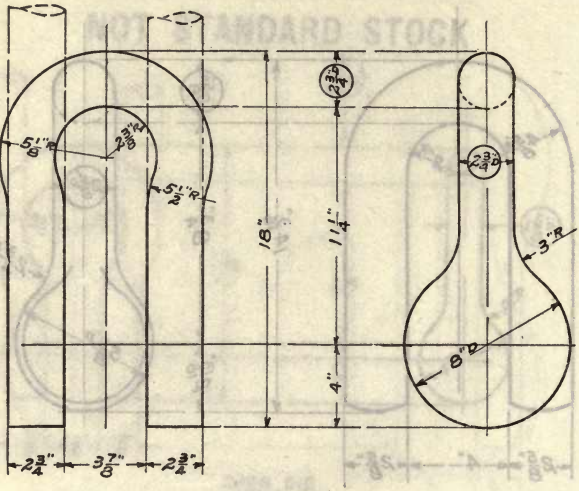

OPEN DIE

SHACKLE, CONNECTING, 2 3/4″

Used with towing gear for battleships

Weight, lbs. **Die number, 1685-B**
Former die number, (319)

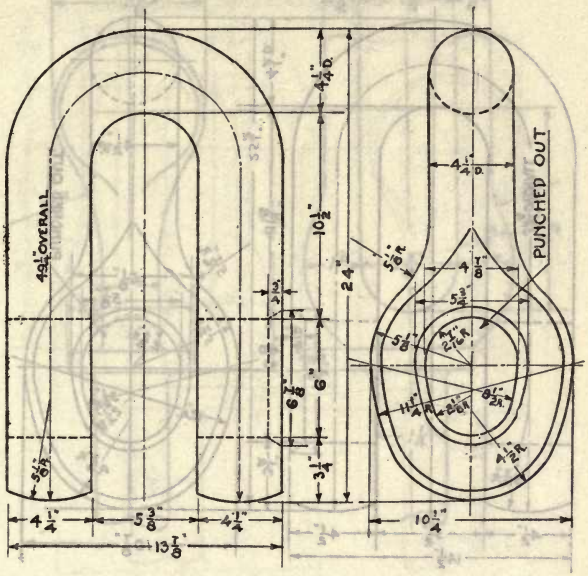

SHACKLE, BENDING, 3 1/4″ CHAIN CABLE

Weight, lbs. **Die number, 1686-B**
Former die number, (314)

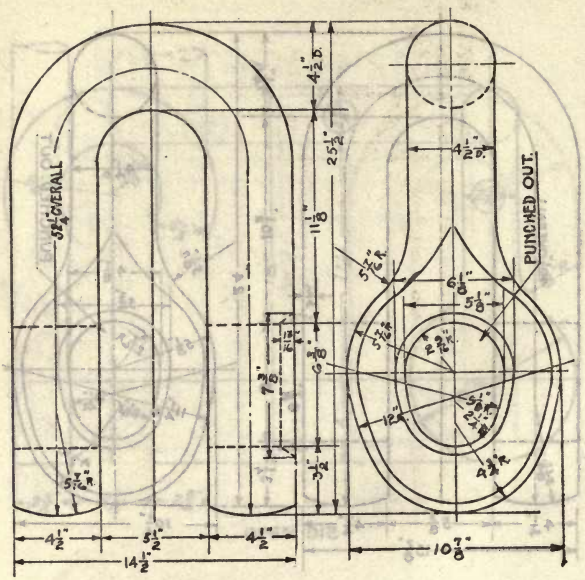

SHACKLE, BENDING, 3 1/2″ CHAIN CABLE

Weight, lbs. **Die number, 1687-B**
Former die number, (315)

NOT STANDARD STOCK

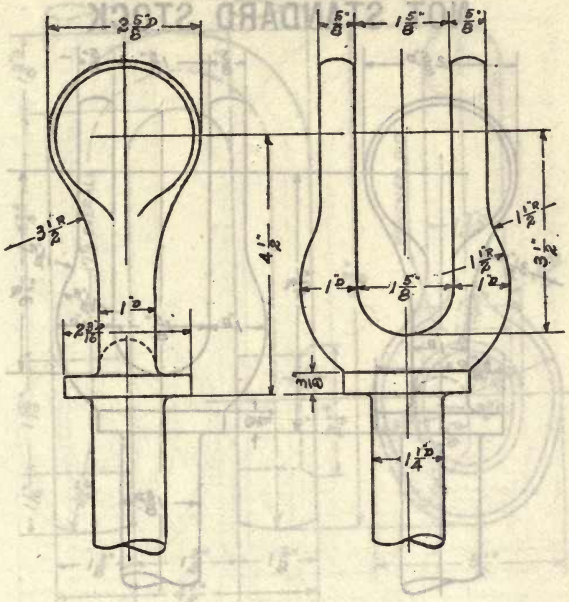

SHACKLE, BLOCK, COALING, 12″

Nonstandard

For standard shackle see die No. 1689

Weight, lbs. **Die number, 1688-N**
Former die number, (5-141)

NOT STANDARD STOCK

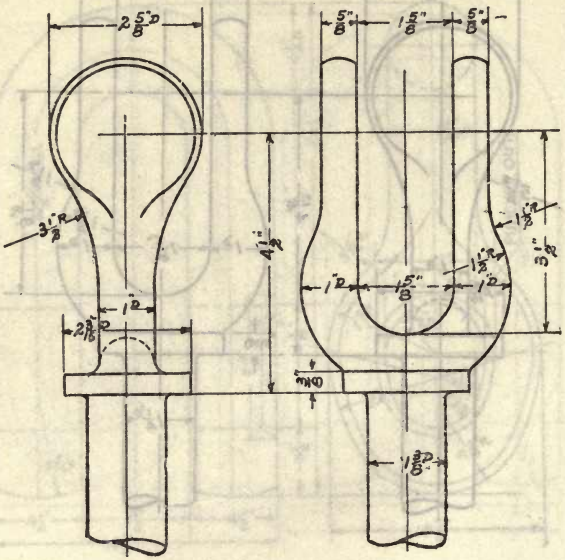

SHACKLE, BLOCK, COALING, 14″

Weight, lbs. Die number, 1689-MN
Former die numbers, (5-142) (5-142)

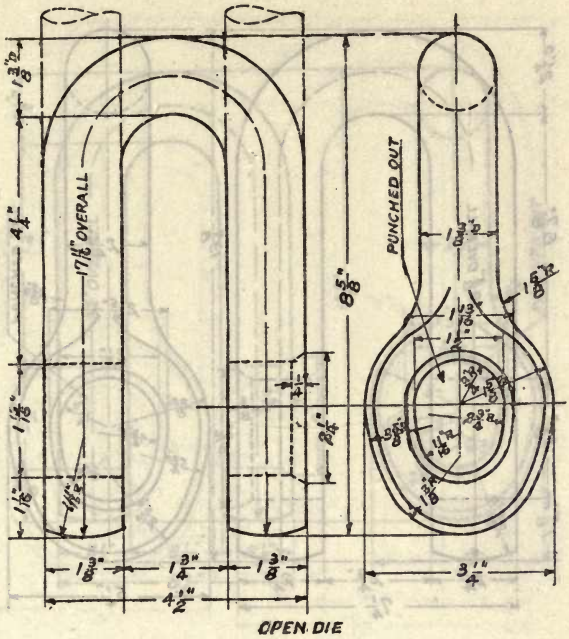

SHACKLE, CONNECTING, 1 1/4″ CHAIN CABLE

Weight (steel), 9.8 lbs.

Die number, 1690-B
Former die number, (222)

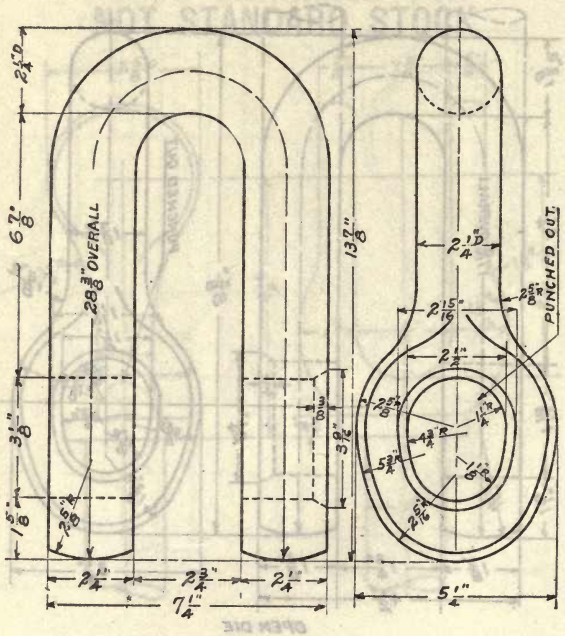

SHACKLE, CONNECTING, 2″ CHAIN CABLE

Weight (steel), 41.5 lbs. **Die number, 1691-B**
Former die number, (225)

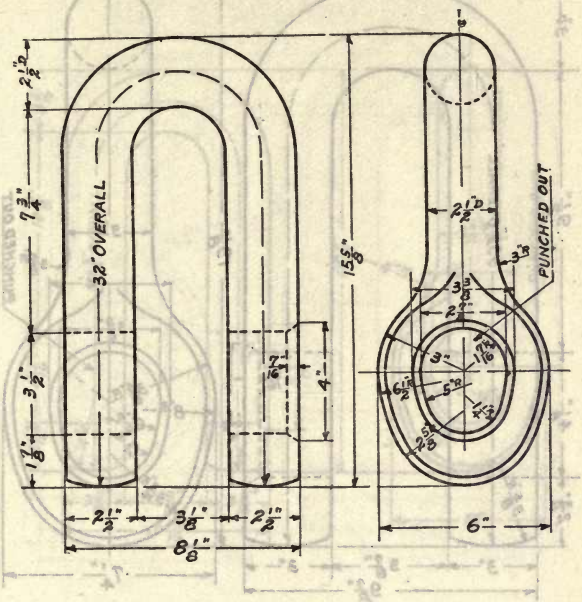

SHACKLE, CONNECTING, 2 1/4″ CHAIN CABLE

Weight (steel), 59.0 lbs. **Die number, 1692-B**
Former die number, (265)

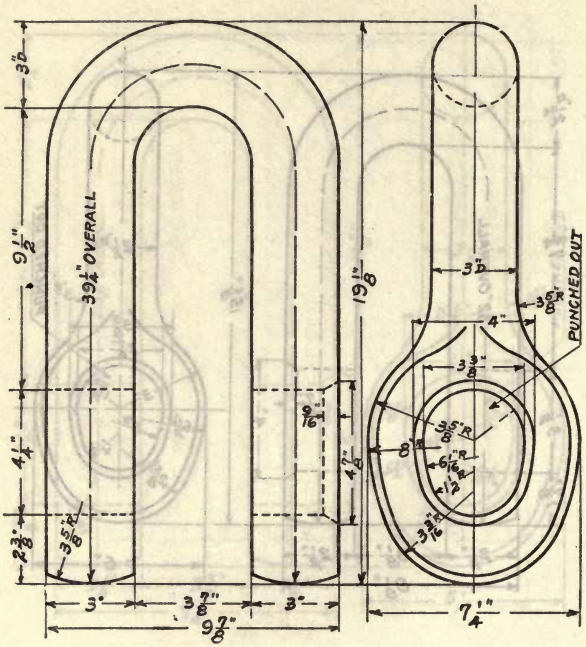

SHACKLE, CONNECTING, 2 3/4″ CHAIN CABLE

Weight (steel), 111.0 lbs. **Die number, 1693-B**
Former die number, (258)

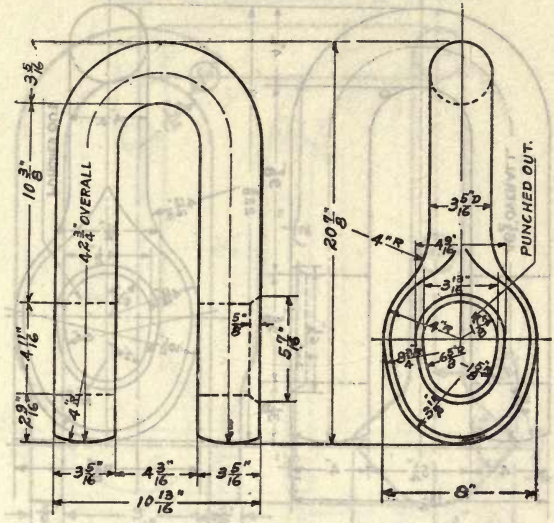

SHACKLE, CONNECTING, 3″ CHAIN CABLE

Weight (steel), 140.0 lbs. **Die number, 1694-B**
Former die number, (246)

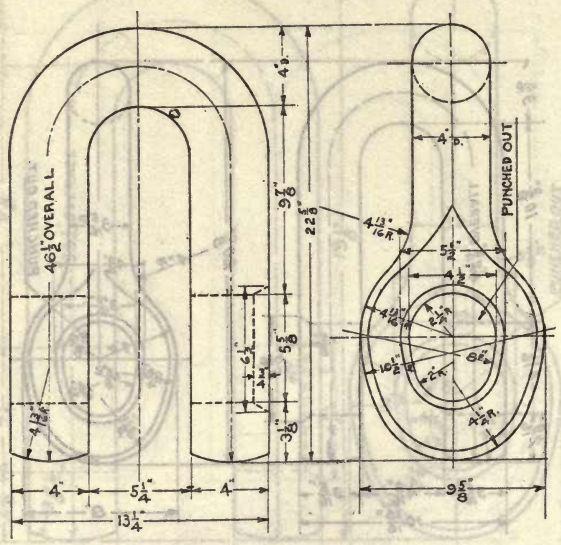

SHACKLE, BENDING, 3″ CHAIN CABLE

Weight, **Lbs.** **Die number, 1695-B**
Former die number, (313)

NOT STANDARD STOCK

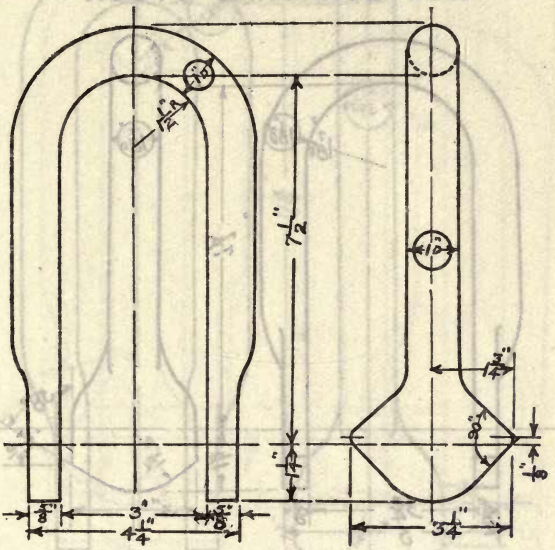

SHACKLE, HOISTING, BOAT, 1″

Weight, lbs. **Die number, 1696-N**
Former die number, (7-4)

NOT STANDARD STOCK

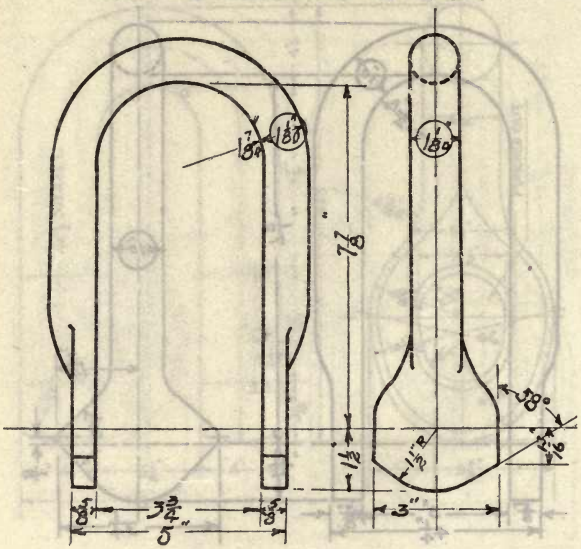

SHACKLE, HOISTING, BOAT, 1 1/8″

Weight, lbs. **Die number, 1697-N**
Former die number, (7-3)

NOT STANDARD STOCK

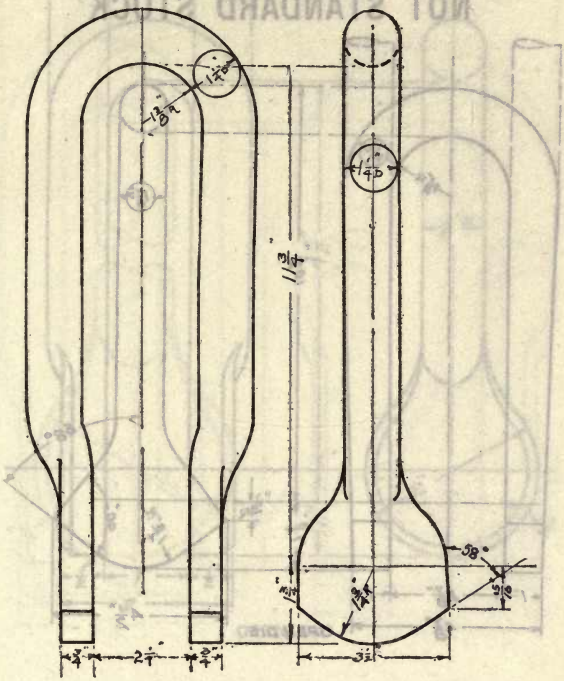

SHACKLE, HOISTING, BOAT, 1 1/4″

Weight (steel), 13.0 lbs. **Die number, 1698-NB**
Former die numbers, (7-2) (214)

NOT STANDARD STOCK

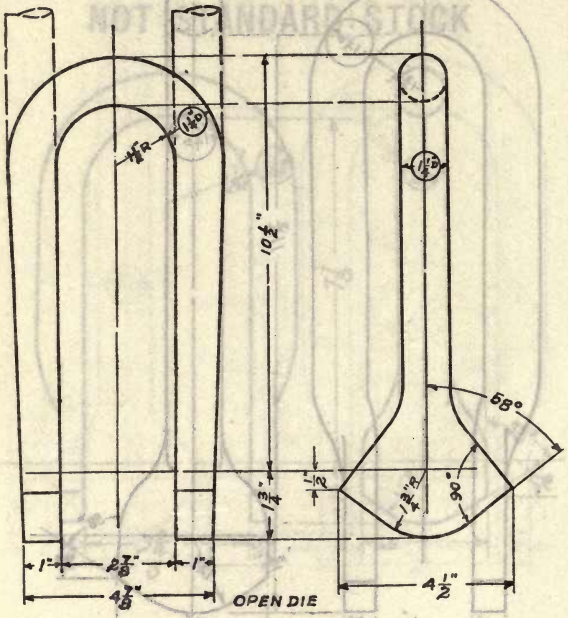

SHACKLE, HOISTING, BOAT, 1 1/4″

Weight (steel), 16.5 lbs. **Die number, 1699-Y**
Former die number, (456)

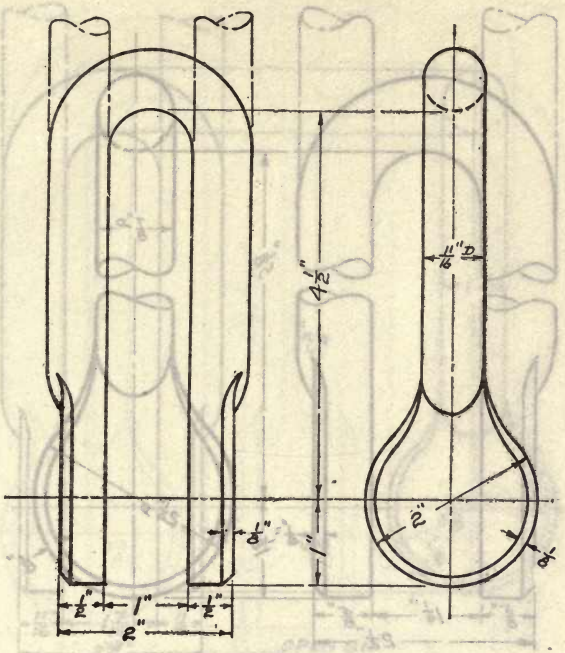

OPEN DIE

SHACKLE, SCREW, RIGGING, 2″

Weight (steel), 2.1 lbs. **Die number, 1700-B**
Former die number, (208)

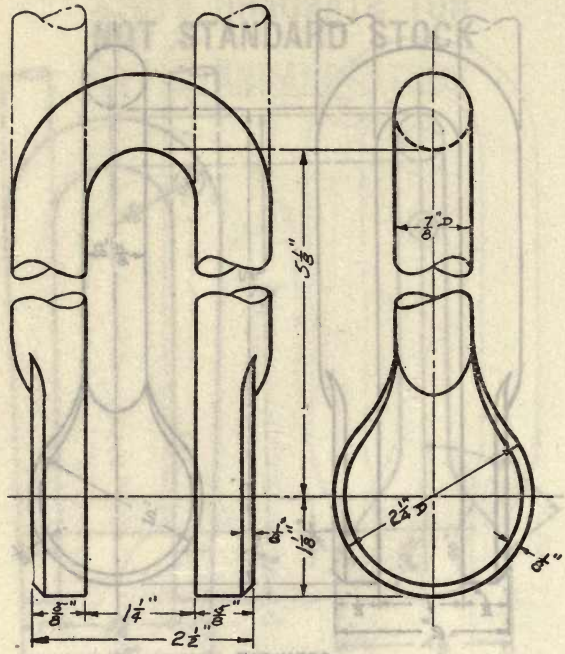

OPEN DIE

SHACKLE, SCREW, RIGGING, 2 1/2″

Weight (steel), 3.0 lbs. **Die number, 1701-B**
Former die number, (195)

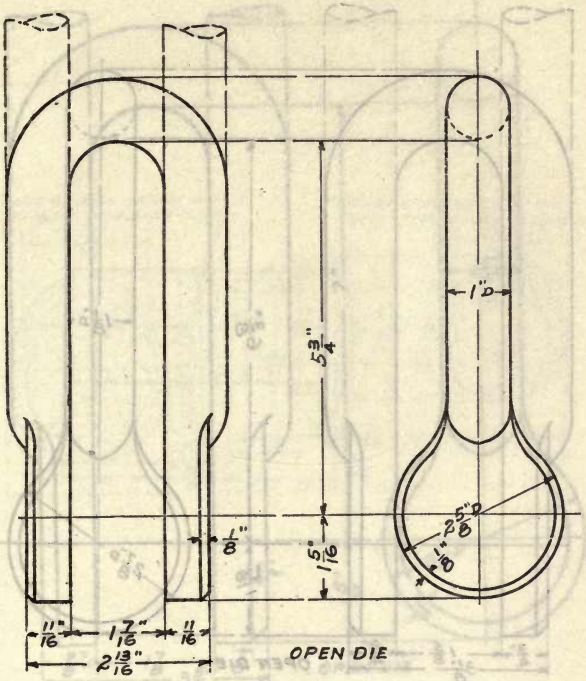

SHACKLE, SCREW, RIGGING, 3″

Weight, lbs. **Die number, 1702-B**
Former die number, (136)

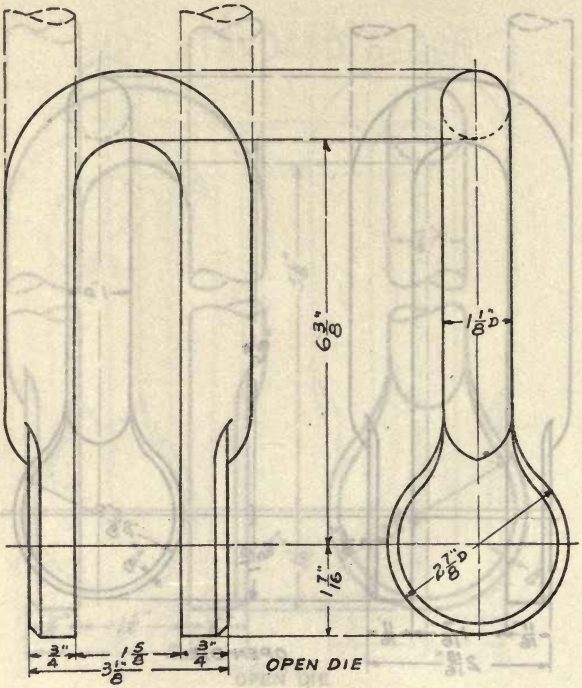

SHACKLE, SCREW, RIGGING, 3 1/2″

Weight, lbs. **Die number, 1703-B**
Former die number, (204)

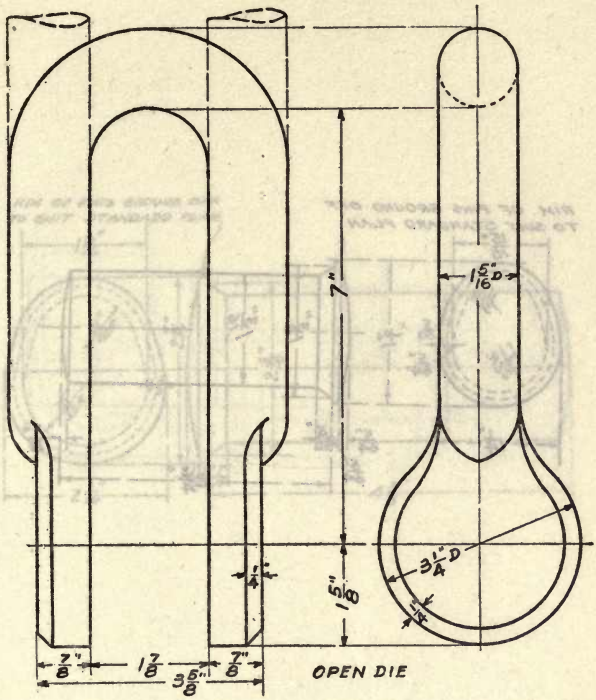

SHACKLE, SCREW, RIGGING, 4"

Weight (steel), 9.5 lbs. **Die number, 1704-B**
Former die number, (138)

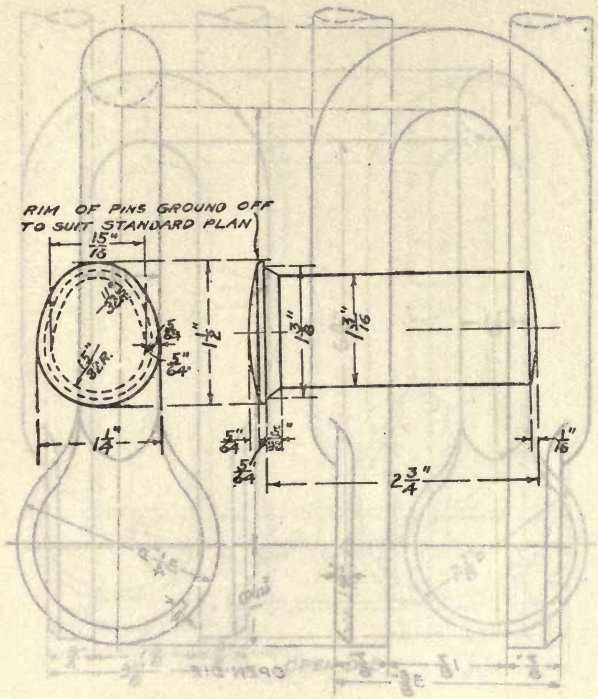

PIN, SHACKLE, CONNECTING, 3/4″ CHAIN CABLE

Weight (steel), 0.75 lb. **Die number, 1705-B**
Former die number, (223)

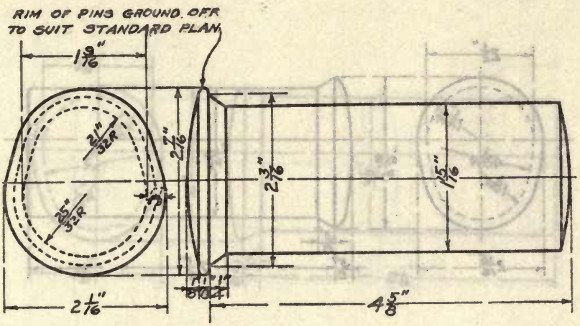

PIN, SHACKLE, CONNECTING, 1 1/4" CHAIN CABLE

Weight (steel), 3.5 lbs. **Die number, 1706-B**
Former die number, (227)

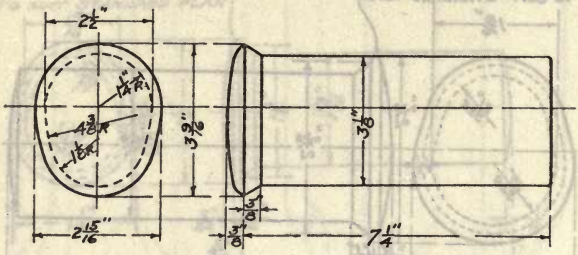

PIN, SHACKLE, CONNECTING, 2″ CHAIN CABLE

Weight (steel), 13.0 lbs. **Die number, 1707-B**
Former die number, (262)

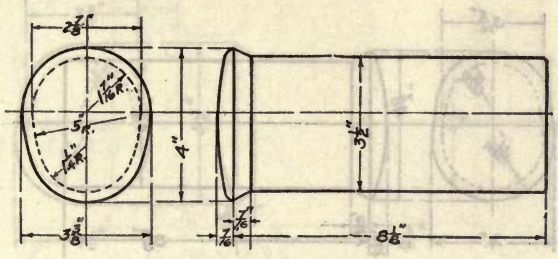

PIN, SHACKLE, CONNECTING, 2 1/4″ CHAIN CABLE

Weight (steel), 18.5 lbs. **Die number, 1708-B**
Former die number, (261)

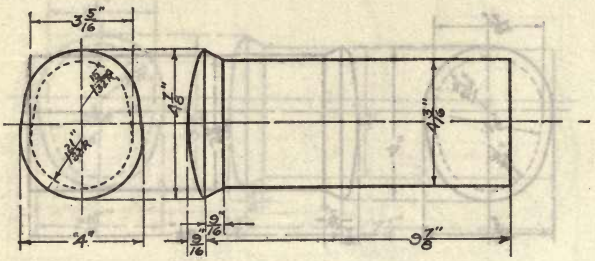

PIN, SHACKLE, CONNECTING, 2 3/4″ CHAIN CABLE

Weight (steel), 32.0 lbs. **Die number, 1709-B**
Former die number, (259)

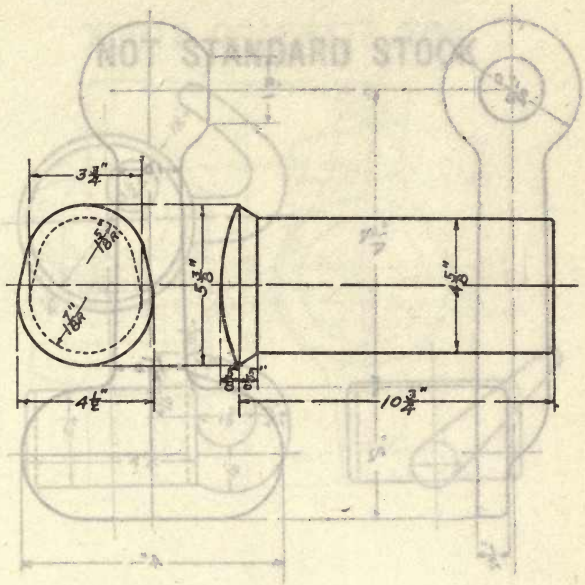

PIN, SHACKLE, CONNECTING, 3″ CHAIN CABLE

Weight (steel), 44.0 lbs. **Die number, 1710-B**
Former die number, (247)

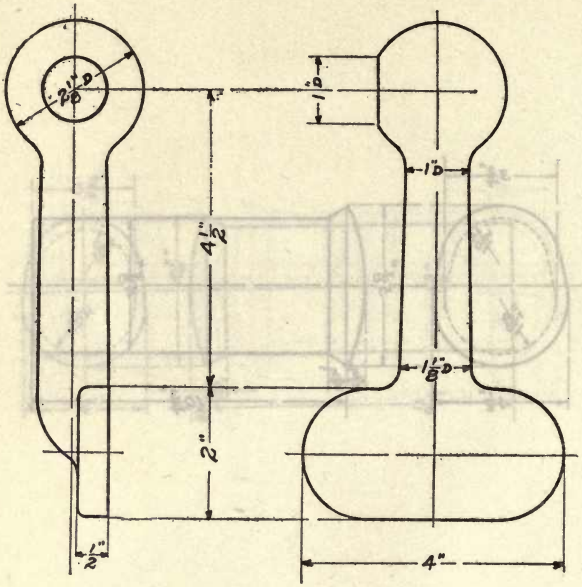

STANCHION, LADDER

Weight, lbs. **Die number, 1711-Y**
Former die number, (1025)

NOT STANDARD STOCK

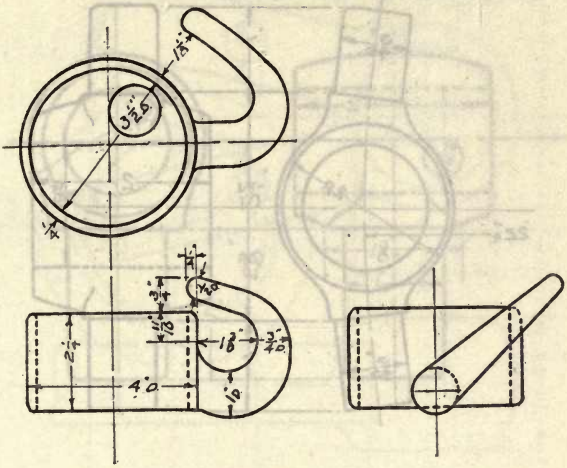

BAND, HOOK, STANCHION, AWNING 3 1/2″

Weight, lbs. **Die number, 1712-M**
Former die number, (4-40)

NOT STANDARD STOCK

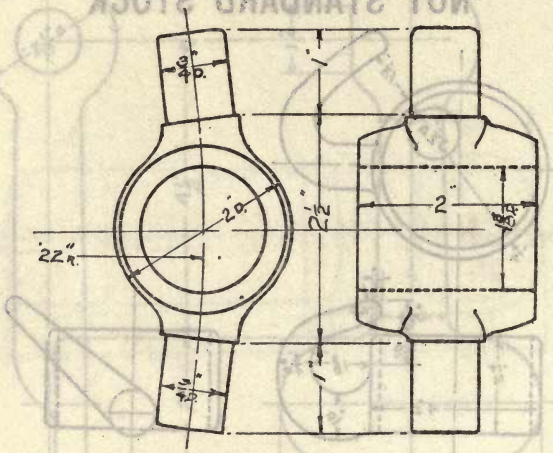

BAND, STANCHION, 1 3/8″

Weight (steel), 1.3 lbs. **Die number, 1713-Y**
Former die number, (483)

NOT STANDARD STOCK

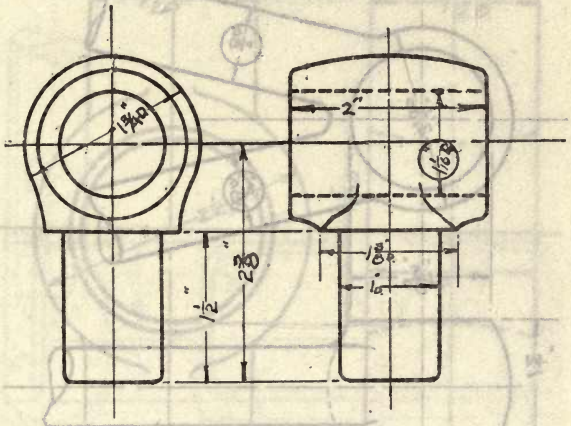

BAND, STANCHION, 1 1/16″

Weight (steel), 1.1 lbs. **Die number, 1714-Y**
Former die number, (484)

NOT STANDARD STOCK

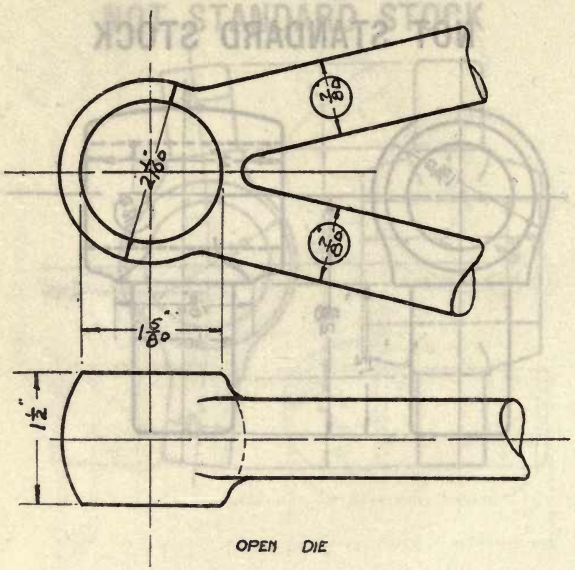

BRACKET, AWNING, 7/8″

Weight, **lbs.** **Die number, 1715-B**
Former die number, (31)

NOT STANDARD STOCK

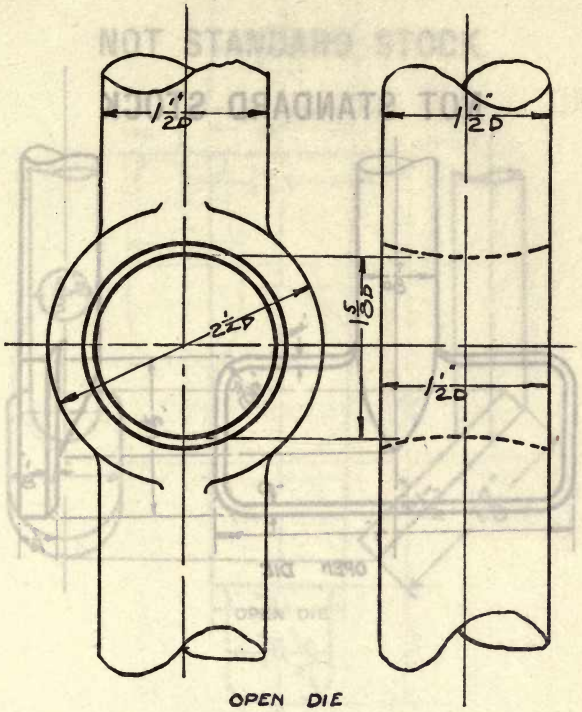

OPEN DIE

EYE, CENTER, STANCHION, LIFE LINE, 1 3/4″

Weight, lbs. **Die number, 1716-Y**
Former die number, (361)

NOT STANDARD STOCK

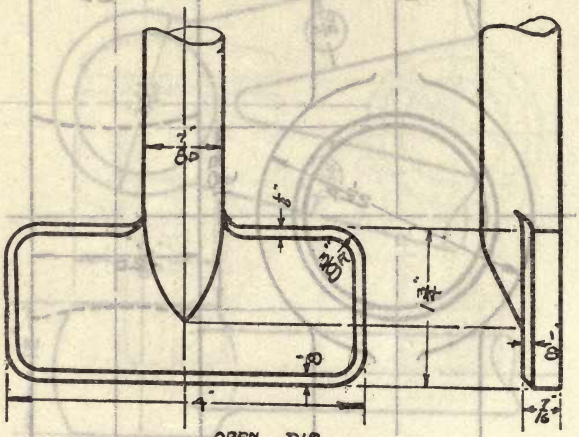

FOOT, BRACKET, AWNING, 7/8"

Weight, lbs. **Die number, 1717-B**
Former die number, (17)

NOT STANDARD STOCK

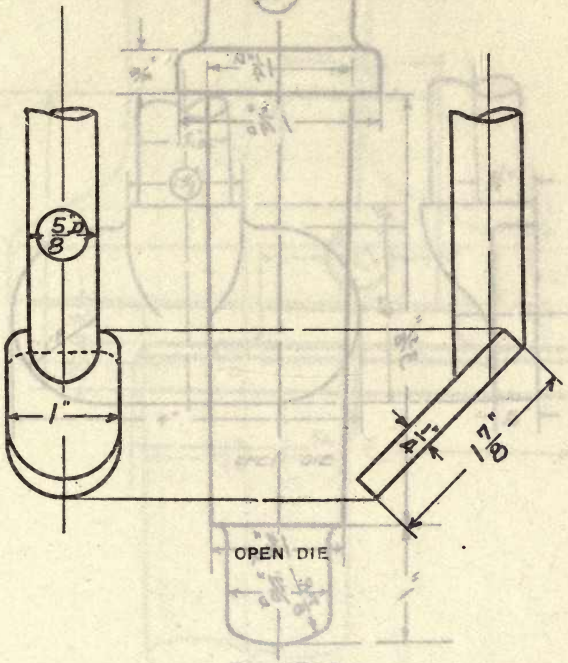

FOOT, STANCHION, 5/8″

Weight, **lbs.** **Die number, 1718-Y**
Former die number, (206)

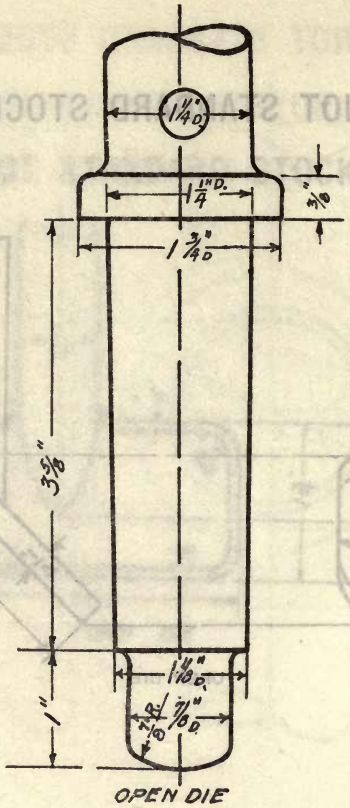

FOOT, STANCHION, RAIL, 1 1/4″

Weight, **lbs.** **Die number, 1719-M**
Former die number, (4-37)

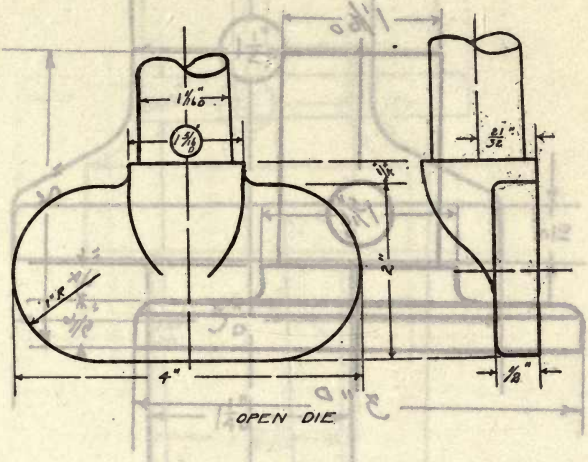

FOOT, STANCHION, 1 5/16″

Used with standard 1″ pipe

Weight, lbs. **Die number, 1720-YM**
Former die number, (1023)

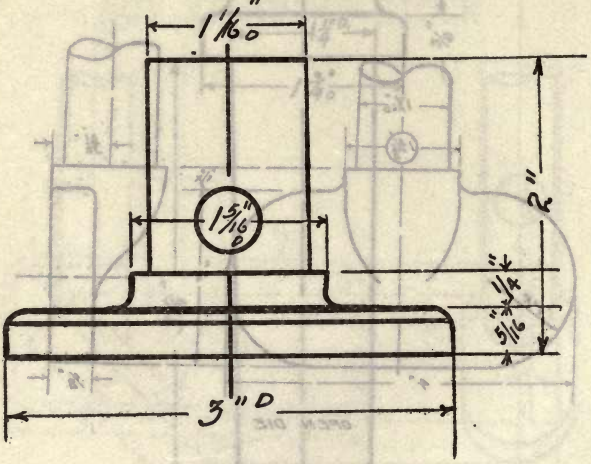

FOOT, STANCHION, 1 5/16″

Used with standard 1″ pipe

Weight (steel), 1.19 lbs. **Die number, 1721-YM**
Former die number, (1022)

NOT STANDARD STOCK

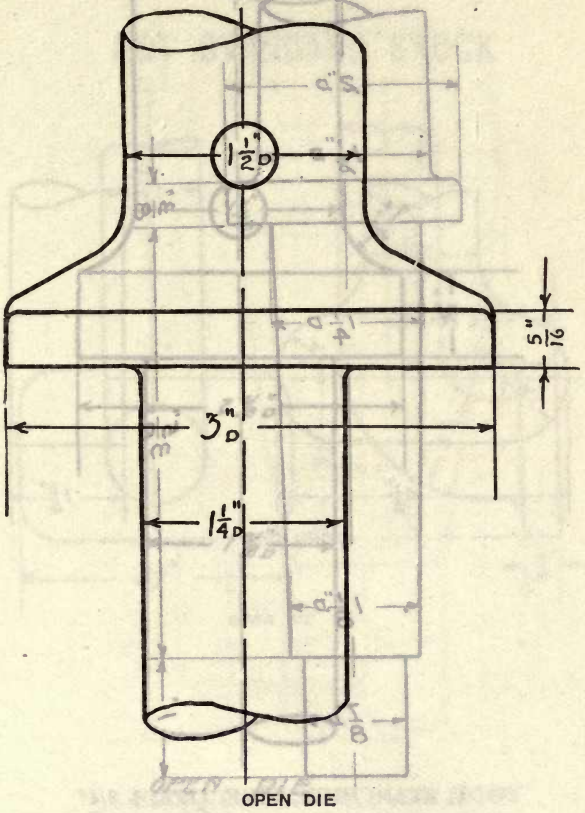

OPEN DIE

FOOT, STANCHION, 1 1/2″

Weight, lbs. **Die number, 1722-B**
Former die number, (48)

NOT STANDARD STOCK

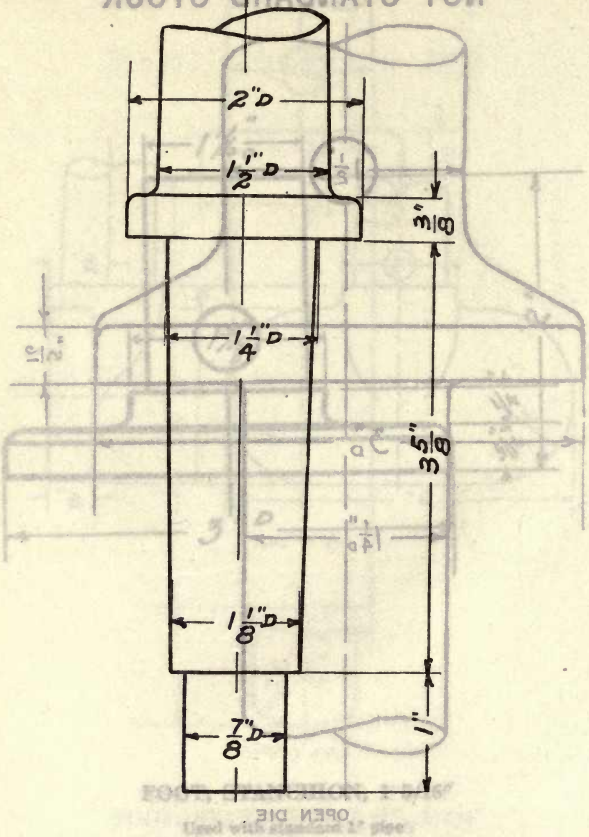

OPEN DIE

FOOT, STANCHION, RAIL, 1 1/2″

Weight, lbs. **Die number, 1723-Y**
Former die number, (212)

NOT STANDARD STOCK

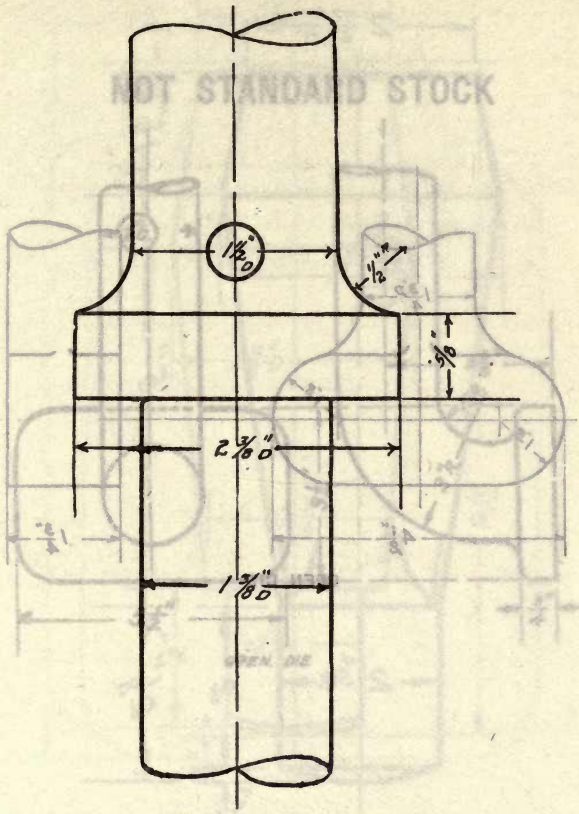

FOOT, STANCHION, RAIL, LIFE, 1 1/2″

Weight, lbs. **Die number, 1724-N**
Former die number, (3-93)

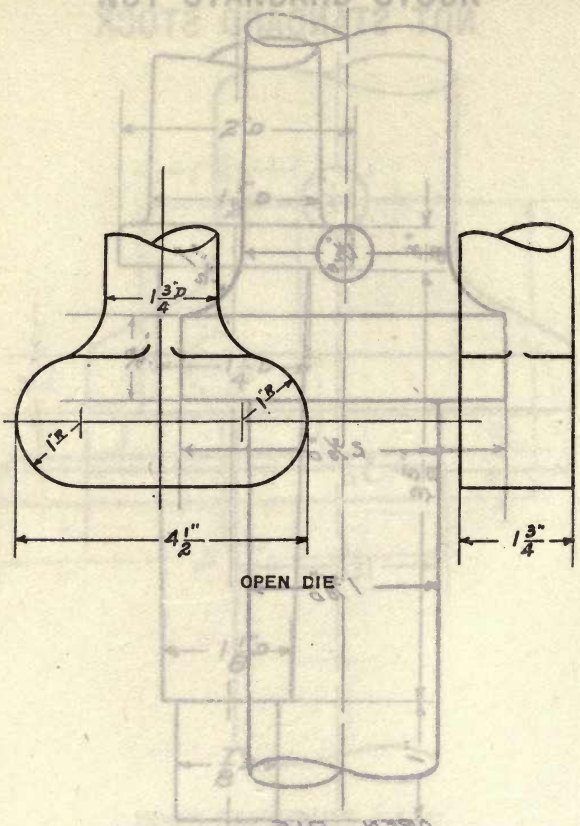

FOOT, STANCHION, LINE, LIFE, 1 3/4″

Weight, lbs. **Die number, 1725-Y**
Former die number, (364)

NOT STANDARD STOCK

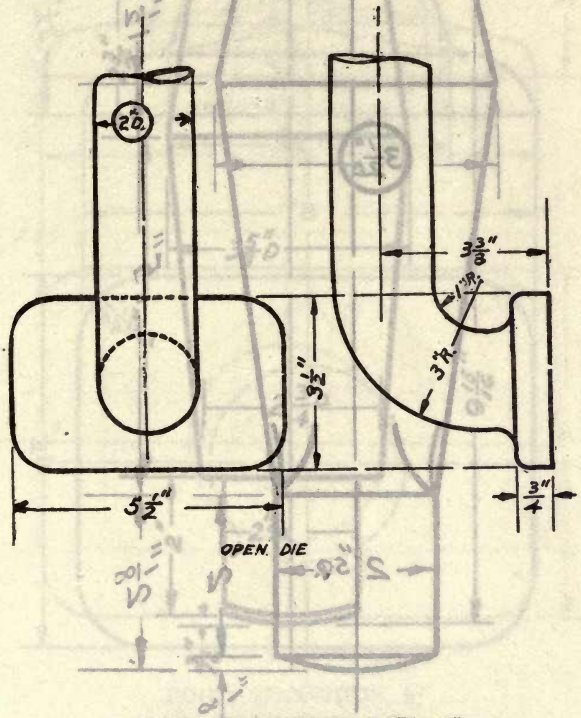

FOOT, STANCHION, RAIL, 2″

Weight, lbs. Die number, 1726-MY
Former die numbers, (4-41) (865)

NOT STANDARD STOCK

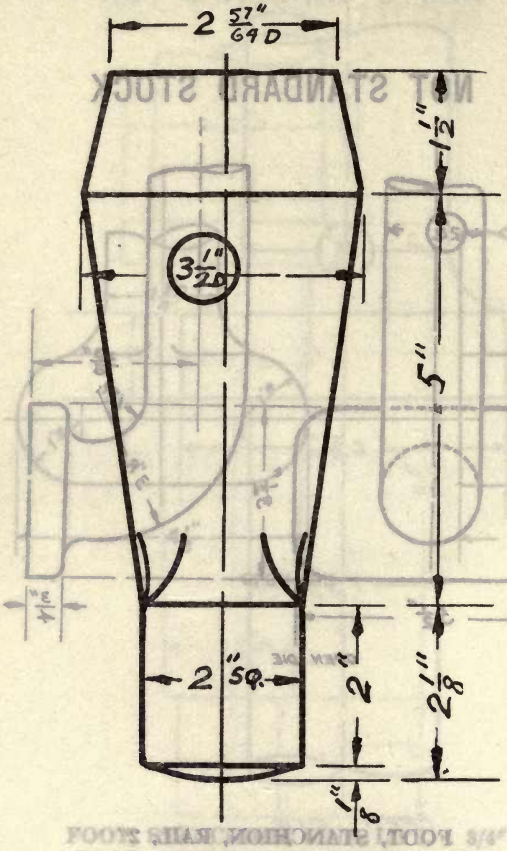

FOOT, STANCHION, AWNING, 3 1/2″

Used with 3″ extra strong pipe

Weight, lbs. **Die number, 1727-M**
Former die number, (4-39)

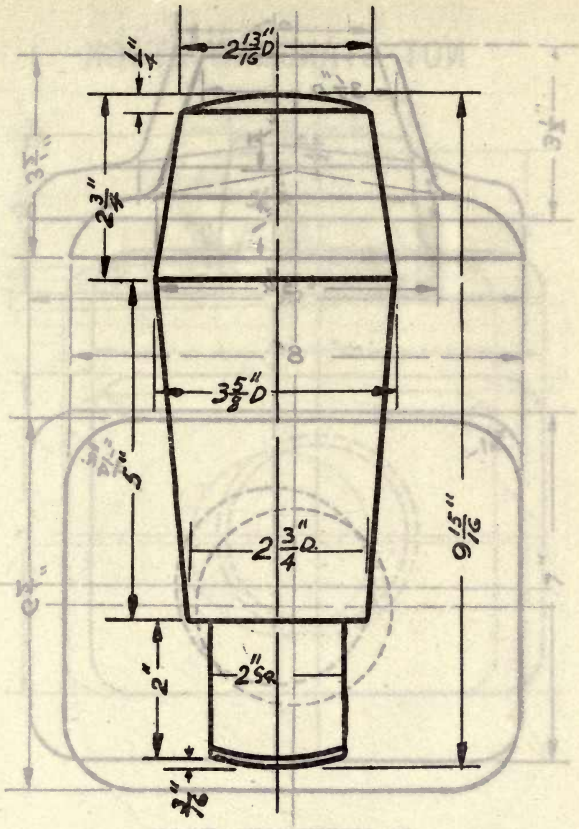

FOOT, STANCHION, AWNING, 3 1/2″

Used with 3″ extra strong pipe

Weight (steel), 18.4 lbs. **Die number, 1728-Y**
Former die number, (366)

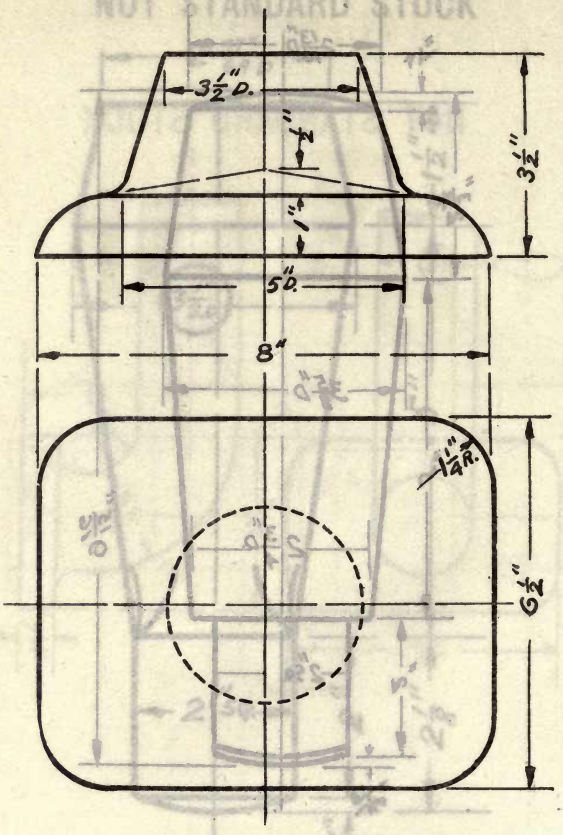

FOOT, STANCHION, 4 1/2″

Used with 4″ extra strong pipe

Weight (steel), 23.0 lbs. **Die number, 1729-MY**
Former die numbers, (3-32) (253)

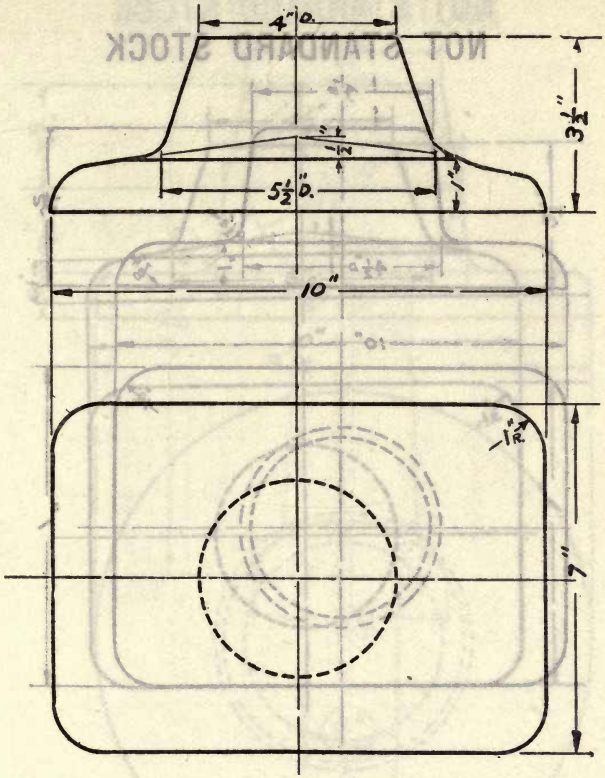

FOOT, STANCHION, 5″

Used with 4 1/2″ extra strong pipe

Weight (steel), 29.0 lbs. **Die number, 1730-Y**
Former die number, (251)

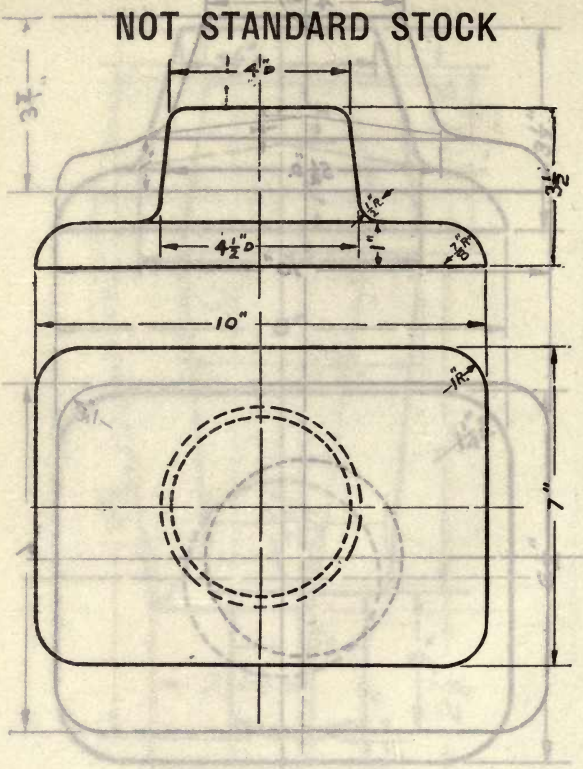

FOOT, STANCHION, 5″

Used with 4 1/2″ extra strong pipe

Weight, lbs. **Die number, 1731-M**
Former die number, (3-37)

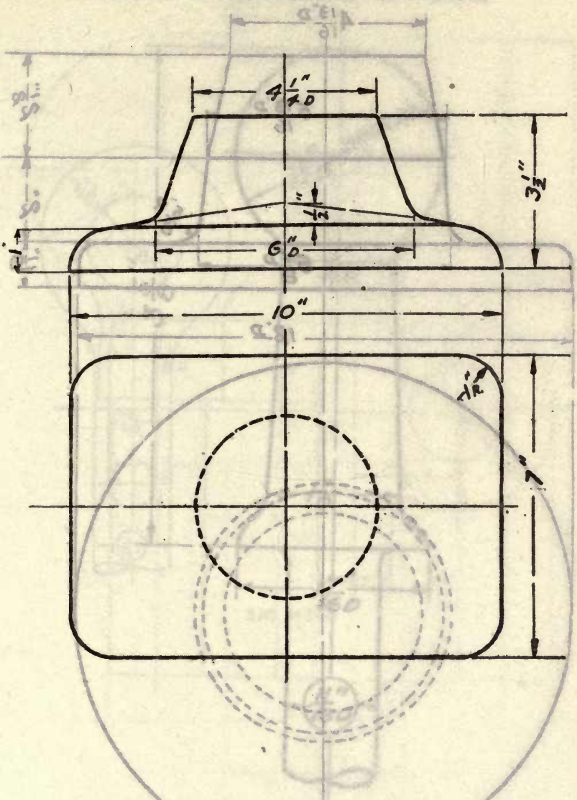

FOOT, STANCHION, 5 9/16″

Used with 5″ extra strong pipe

Weight (steel), 33.0 lbs. **Die number, 1732-YM**
Former die number, (249)

NOT STANDARD STOCK

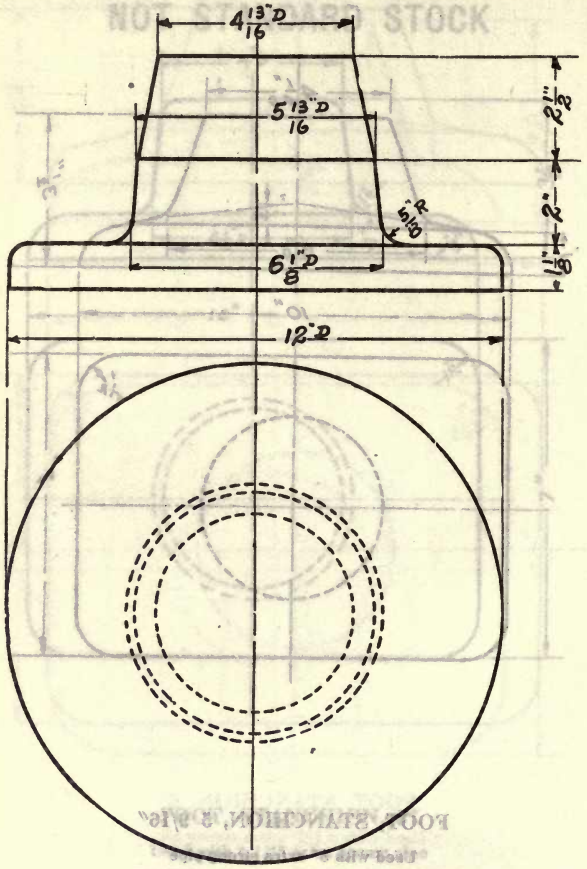

FOOT, STANCHION, 5 9/16″

Used with 5″ extra strong pipe

Weight, lbs. **Die number, 1733-Y**
Former die number, (497)

NOT STANDARD STOCK

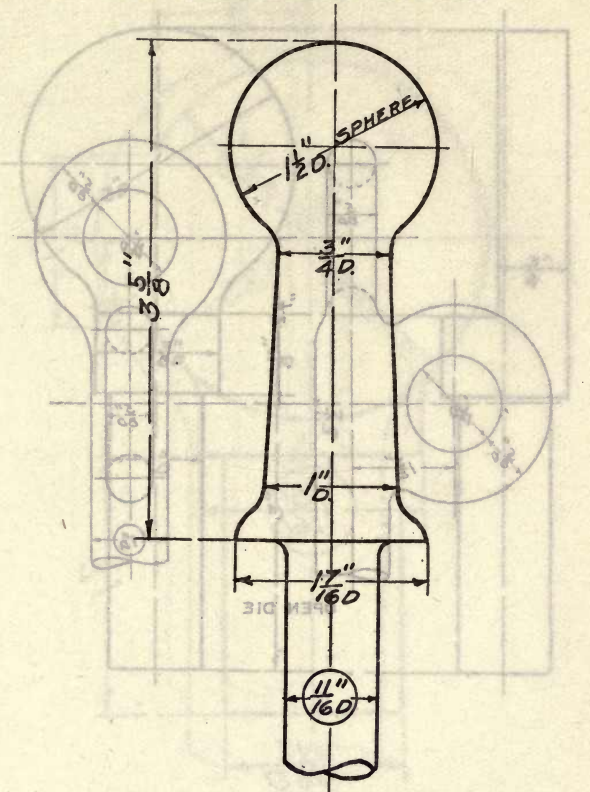

OPEN DIE.

HEAD, STANCHION, 11/16″

Weight, lbs. **Die number, 1734-B**
Former die number, (34)

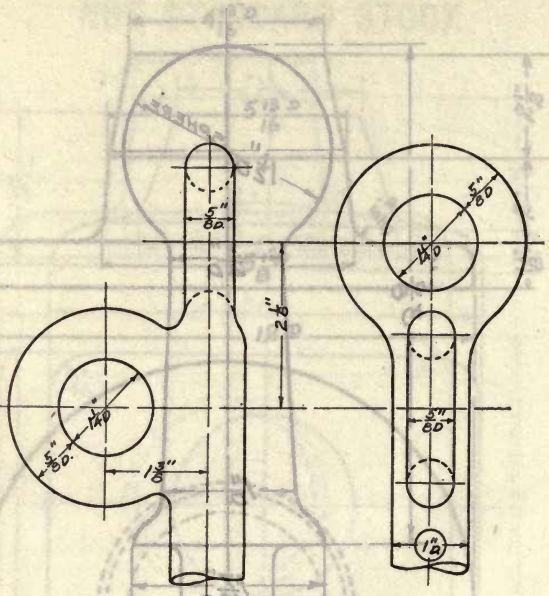

OPEN DIE

HEAD, STANCHION, LINE, GUARD, 1″

Weight, lbs. **Die number, 1735-M**
Former die number, (4-60)

NOT STANDARD STOCK

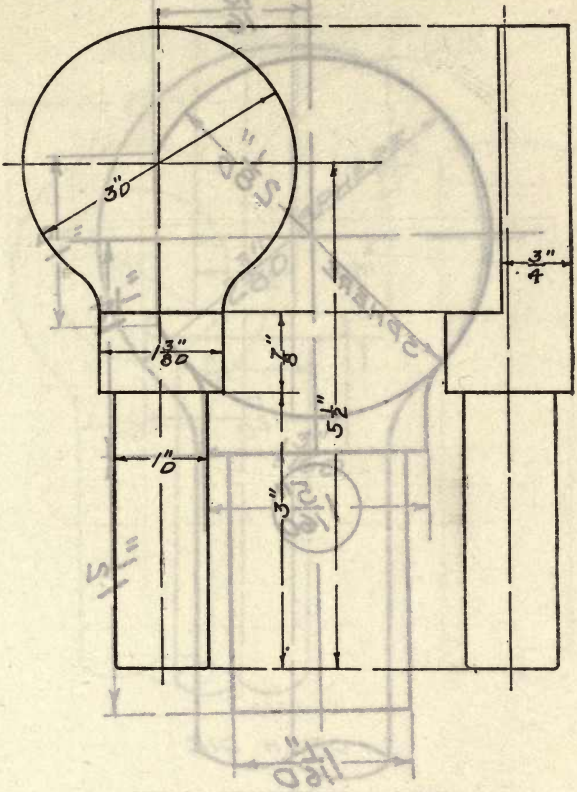

HEAD, STANCHION, 1 5/16″

Used with 1″ pipe

Weight (steel), 2.6 lbs. **Die number, 1736-Y**
Former die number, (481)

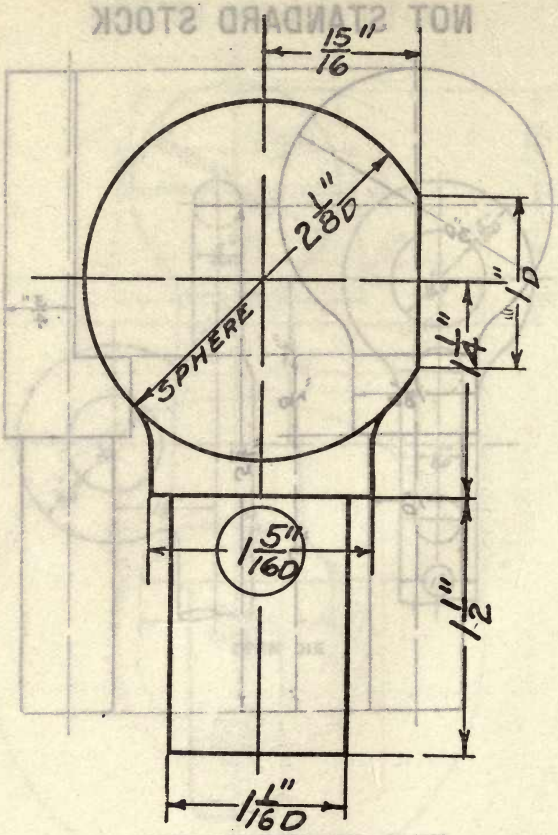

HEAD, STANCHION, 1 5/16″

Used with standard 1″ pipe

Weight (steel), 1.9 lbs. **Die number, 1737-YM**
Former die number, (1024)

NOT STANDARD STOCK

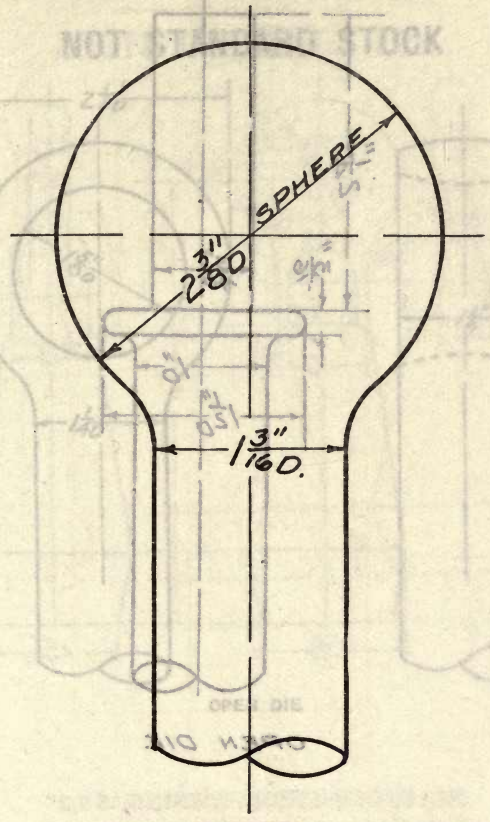

OPEN DIE

HEAD, STANCHION, RAIL, LIFE, 1 1/2″

Weight, **lbs.** **Die number, 1738-N**
Former die number, (3-92)

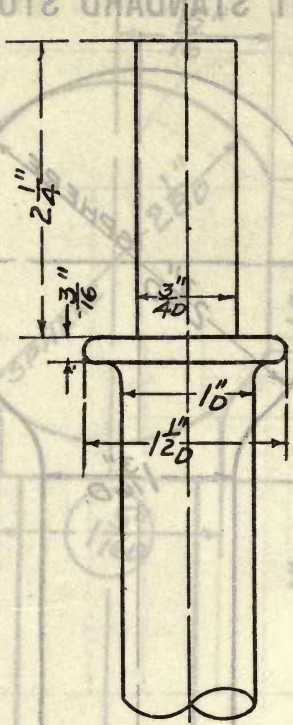

HEAD, STANCHION, RAIL, 1 1/2″

Weight, **lbs.** **Die number, 1739-Y**
Former die number, (211)

NOT STANDARD STOCK

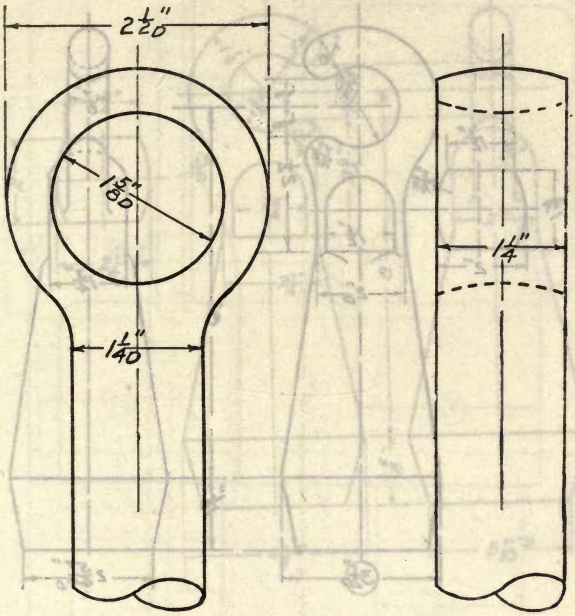

OPEN DIE

HEAD, STANCHION, LINE, LIFE, 1 1/4″

Weight, lbs. **Die number, 1740-Y**
Former die number, (349)

NOT STANDARD STOCK

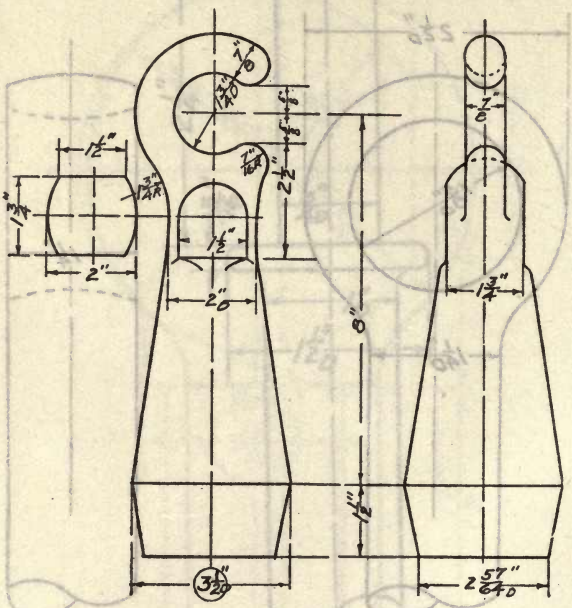

HEAD, STANCHION, AWNING, 3 1/2″

Used with 3″ extra strong pipe

Weight, lbs. Die number, 1741-M
Former die number, (4-38)

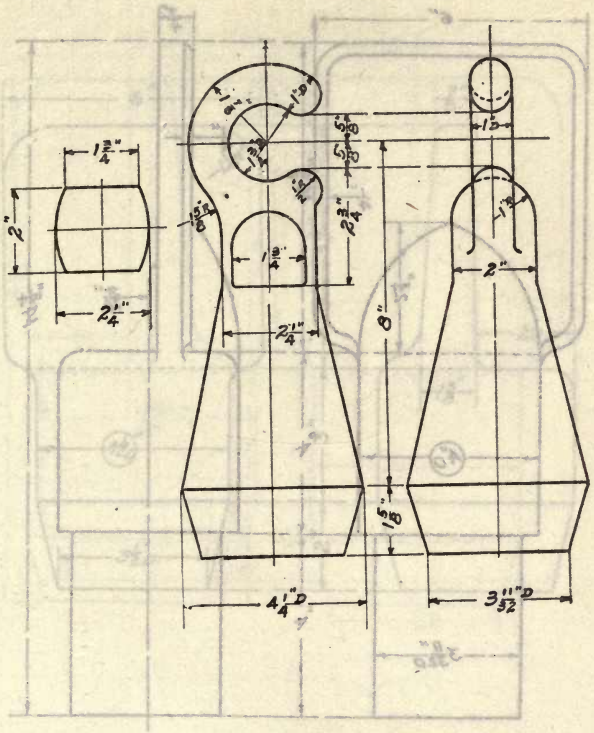
1 3/4"
2"
2 1/4"
1 3/4"
2 1/4"
2 3/4"
1 3/4"
1 3/4"
1

NOT STANDARD STOCK

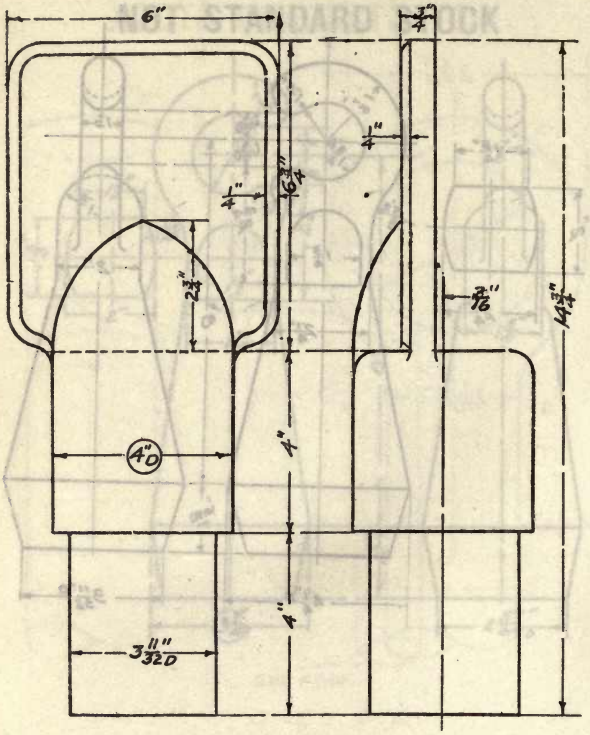

HEAD, STANCHION, 4″

Used with 3 1/2″ extra strong pipe

Weight, lbs. **Die number, 1743-B**
Former die number, (121)

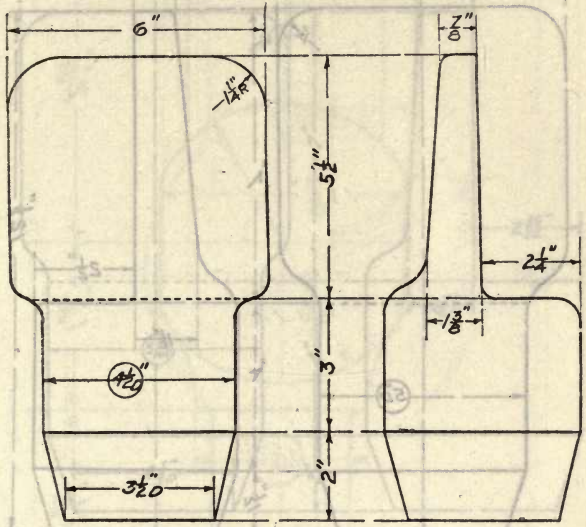

HEAD, STANCHION, 4 1/2″

Used with 4″ extra strong pipe

Weight (steel), 33.0 lbs. Die number, 1744-MY
Former die numbers, (3-31) (254)

NOT STANDARD STOCK

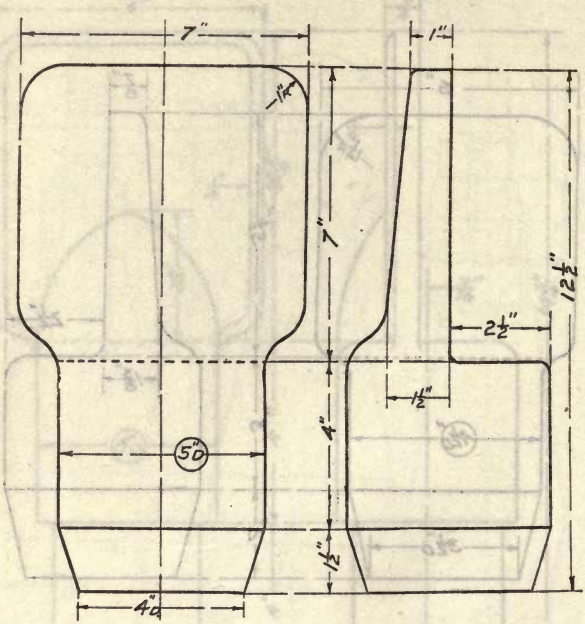

HEAD, STANCHION, 5″

Used with 4 1/2″ extra strong pipe

Weight (steel), 50.0 lbs. Die number, 1745-MY
Former die numbers, (3-36) (252)

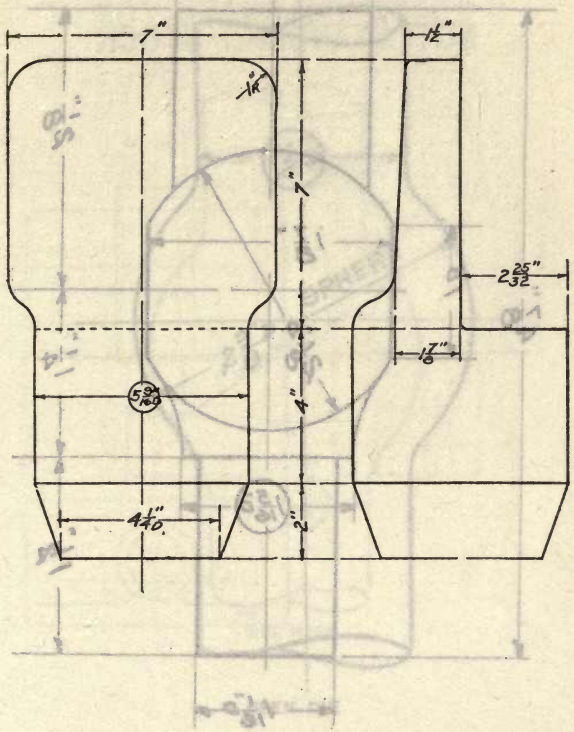

HEAD, STANCHION, 5 9/16″

Used with 5″ extra strong pipe

Weight (steel), 63.0 lbs. **Die number, 1746-YM**
Former die number, (250)

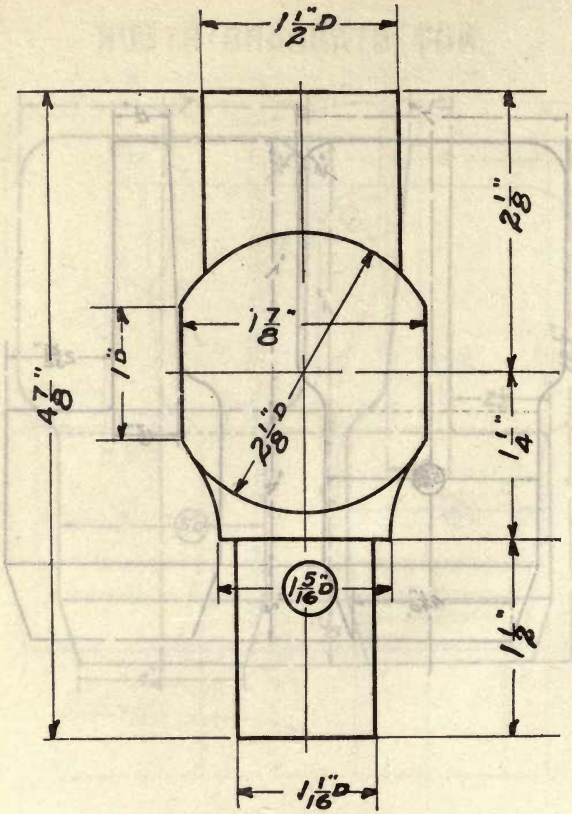

KNOB, STANCHION, 1 5/16″

Used with standard 1″ pipe

Weight, lbs. **Die number, 1747-Y**
Former die number, (1026)

NOT STANDARD STOCK

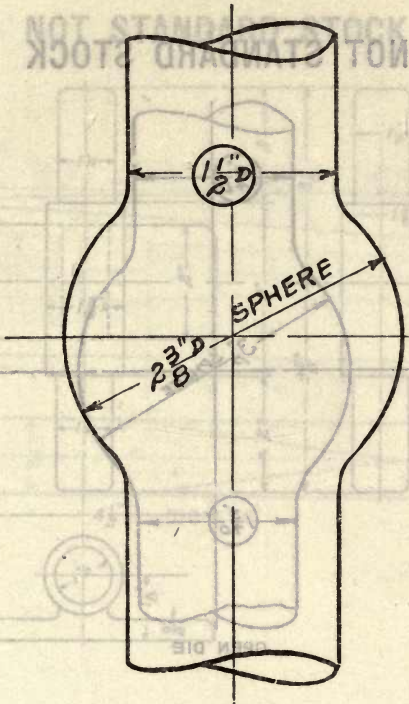

OPEN DIE

KNOB, STANCHION, RAIL, LIFE, 1 1/2″

Weight, lbs. **Die number, 1748-N**
Former die number, (3-92)

NOT STANDARD STOCK

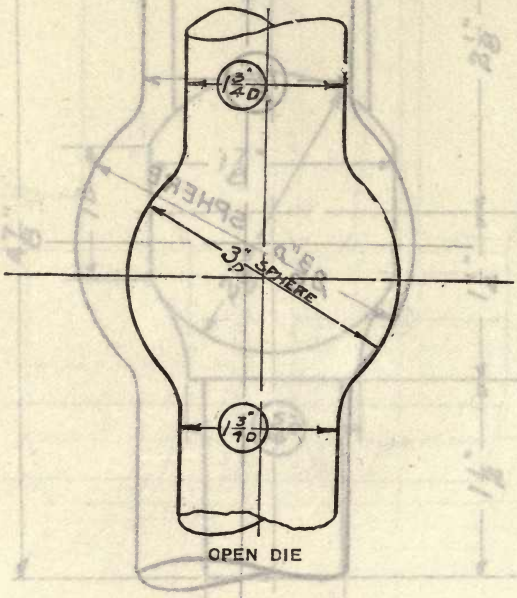

KNOB, STANCHION, RAIL, LIFE, 1 3/4"

Weight, lbs. Die number, 1749-Y
Former die number, (208)

NOT STANDARD STOCK

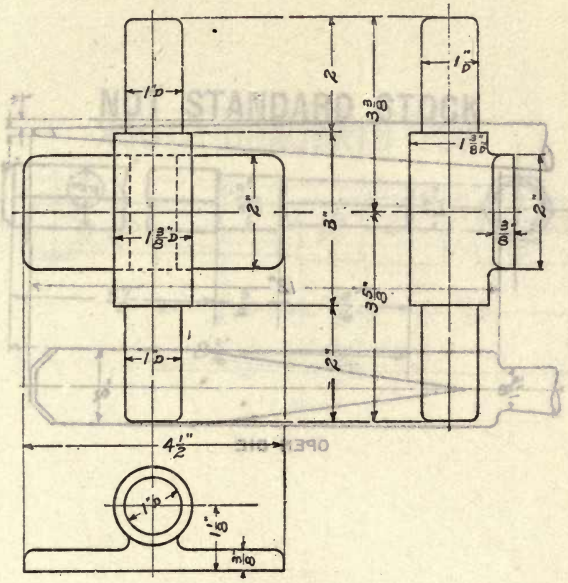

PAD, STANCHION

Weight (steel), 3.2 lbs. **Die number, 1750-Y**
Former die number, (482)

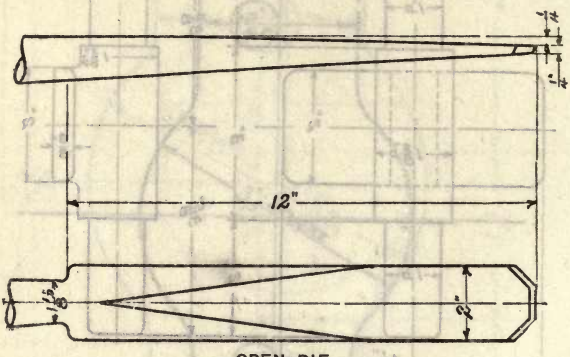

BAR, SLICE, POINT

Weight (steel), 8.5 lbs. Die number, 1751-MNY
Former die numbers, (12-13) (3-60) (1130)

NOT STANDARD STOCK

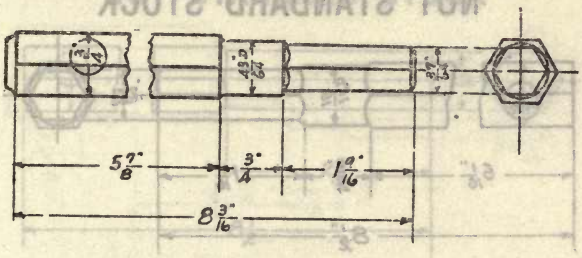

CHISEL, 3/4″ HEXAGONAL; SHANK

For pneumatic hammer

Weight (steel), 0.5 lb. **Die number, 1752-N**
Former die number, (9-1)

NOT STANDARD STOCK

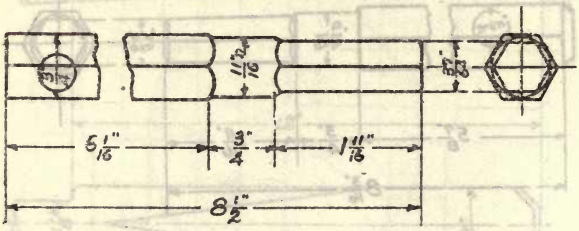

CHISEL, 3/4" HEXAGONAL; SHANK

For pneumatic hammer

Weight, lbs. Die number, 1753-M
Former die number, (9-1)

NOT STANDARD STOCK

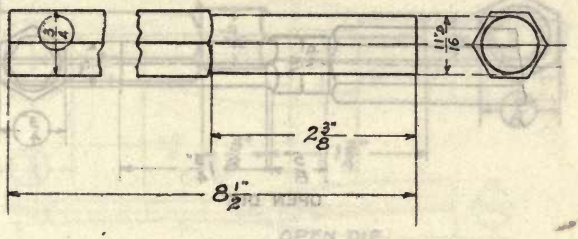

CHISEL, 3/4" HEXAGONAL; SHANK

For pneumatic hammer

Weight, lbs. **Die number, 1754-M**
Former die number, (9-42)

NOT STANDARD STOCK

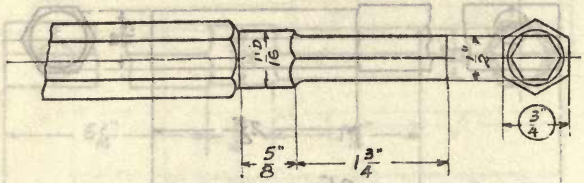

CHISEL, 3/4″ HEXAGONAL; SHANK

For pneumatic hammer

Weight, lbs. **Die number, 1755-Y**
Former die number, (63)

NOT STANDARD STOCK

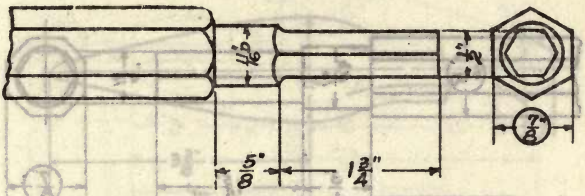

OPEN DIE

CHISEL, 7/8" HEXAGONAL; SHANK

For pneumatic hammer

Weight, lbs.

Die number, 1756-Y
Former die number, (62)

NOT STANDARD STOCK

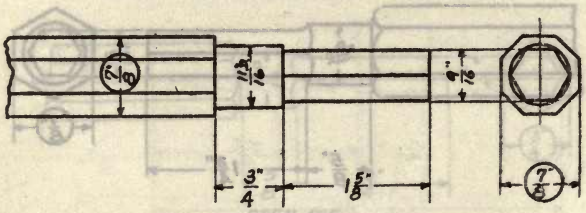

OPEN DIE

CHISEL, 7/8″ OCTAGONAL; SHANK

For pneumatic hammer

Weight, **lbs.** **Die number, 1757-B**
Former die number, (106)

NOT STANDARD STOCK

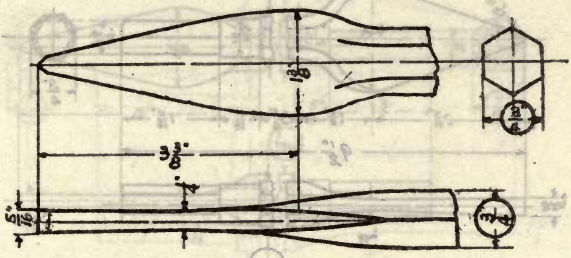

OPEN DIE

CHISEL, CAPE 3/4″ HEXAGONAL; POINT

Weight, **lbs.** **Die number, 1758-M**
Former die number, (9-12)

NOT STANDARD STOCK

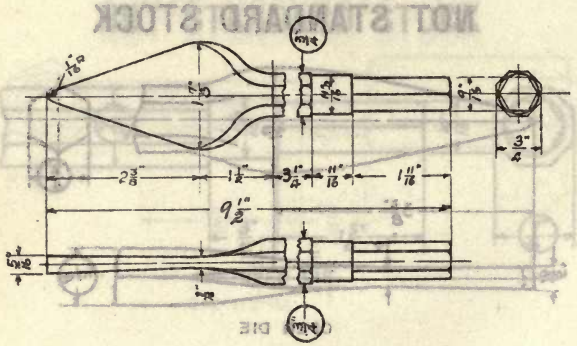

CHISEL, CAPE, 3/4″, OCTAGONAL

For pneumatic hammer

Weight (steel), 1.1 lbs. **Die number, 1759-Y**
Former die number, (476)

NOT STANDARD STOCK

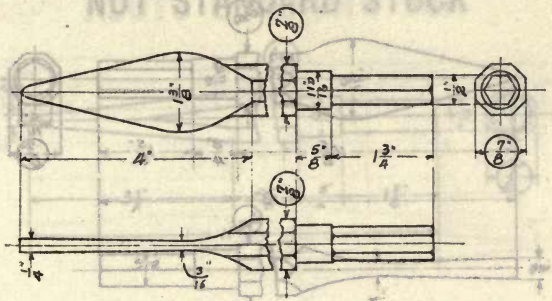

OPEN DIE

CHISEL, CAPE, 7/8", OCTAGONAL

For pneumatic hammer

Weight, lbs. **Die number, 1760-Y**
Former die number, (64)

NOT STANDARD STOCK

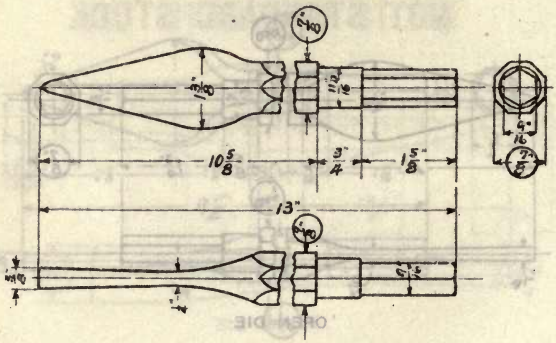

CHISEL, CAPE, 7/8″, OCTAGONAL

For pneumatic hammer

Weight, lbs. **Die number, 1761-B**
Former die number, (101)

NOT STANDARD STOCK

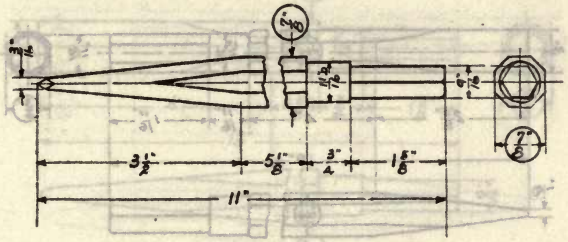

CHISEL, DIAMOND POINT, 7/8″, OCTAGONAL

For pneumatic hammer

Weight, lbs. **Die number, 1762-B**
Former die number, (101)

NOT STANDARD STOCK

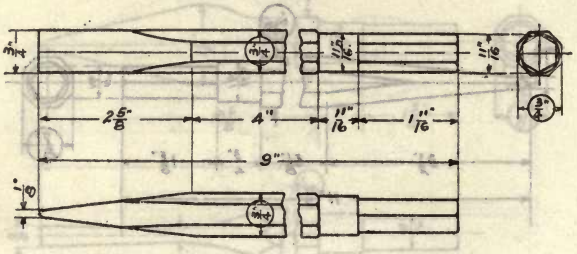

CHISEL, FLAT, 3/4", OCTAGONAL

For pneumatic hammer

Weight (steel), 1.2 lbs. **Die number, 1763-Y**
Former die number, (477)

NOT STANDARD STOCK

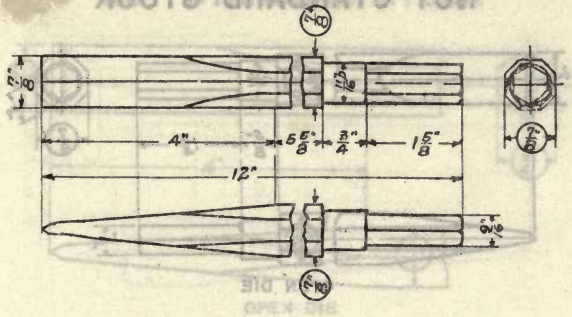

CHISEL, FLAT, 7/8″, OCTAGONAL

For pneumatic hammer

Weight, lbs. **Die number, 1764-B**
Former die number, (102)

NOT STANDARD STOCK

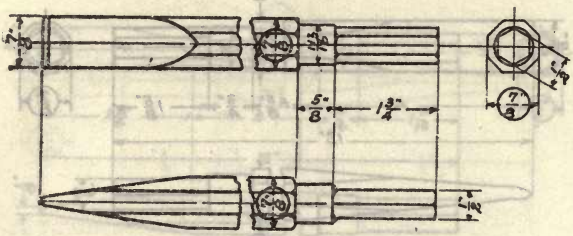

OPEN DIE

CHISEL, FLAT, 7/8″, OCTAGONAL

For pneumatic hammer

Weight (steel), 1.38 lbs. **Die number, 1765-Y**
Former die number, (64-A)

NOT STANDARD STOCK

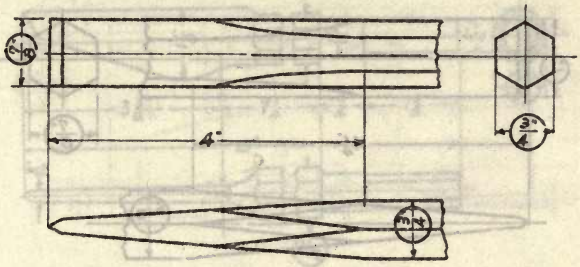

OPEN DIE

CHISEL, FLAT, 7/8" HEXAGONAL; POINT

Weight, lbs. Die number, 1766-M
Former die number, (9-11)

NOT STANDARD STOCK

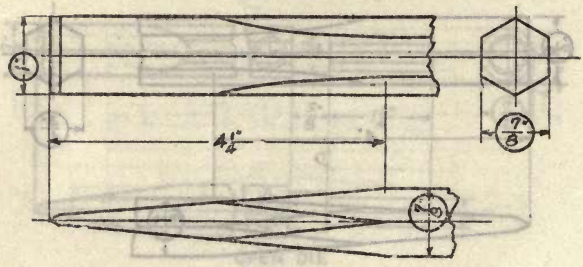

OPEN DIE

CHISEL, FLAT, 1″ HEXAGONAL; POINT

Weight, . lbs. Die number, 1767-M
Former die number, (9-11)

NOT STANDARD STOCK

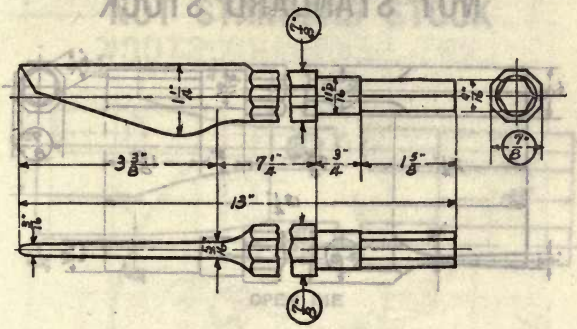

CHISEL, GOUGING, 7/8", OCTAGONAL

For pneumatic hammer

Weight, lbs. **Die number, 1768-B**
Former die number, (103)

NOT STANDARD STOCK

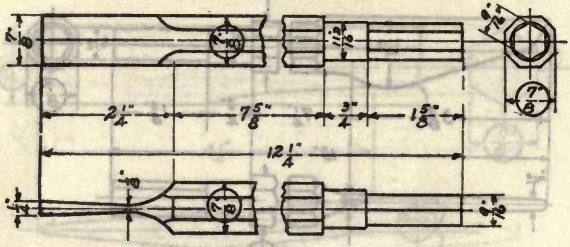

CHISEL, RIPPING, 7/8", OCTAGONAL

For pneumatic hammer

Weight, lbs. **Die number, 1769-B**
Former die number, (103)

NOT STANDARD STOCK

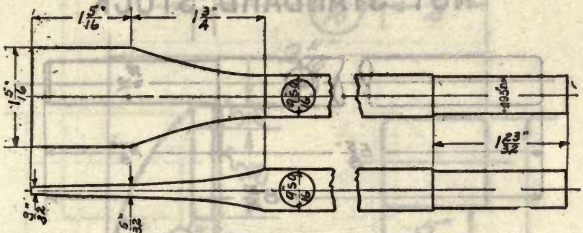

CHISEL, SCALING, 9/16″, SQUARE

For pneumatic hammer

Weight, **lbs.** **Die number, 1770-Y**
Former die number, (61)

NOT STANDARD STOCK

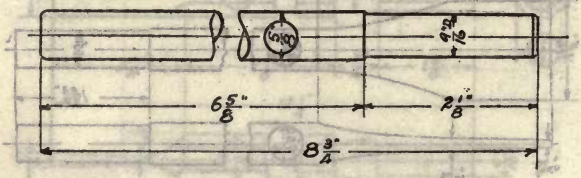

CHISEL, SCALING, 5/8″ D; SHANK

For pneumatic hammer

Weight (steel), 1.0 lb. Die number, 1771-N
Former die number, (9-2)

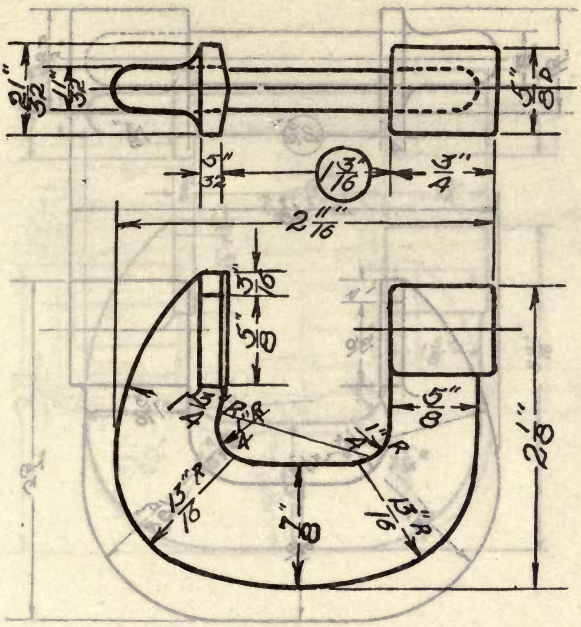

CLAMP, "C," 1 3/16″

Weight, ____ lbs. Die number, 1772-Y
Former die number, (1116)

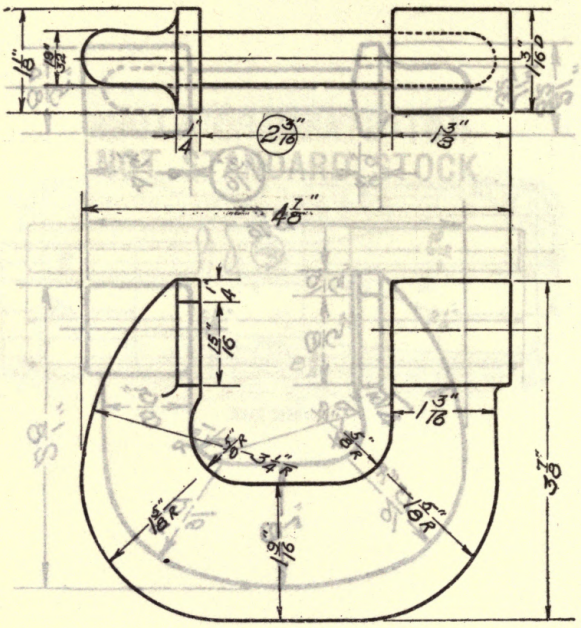

CLAMP, "C," 2 3/16″

Weight, lbs. **Die number, 1773-Y**
Former die number, (1117)

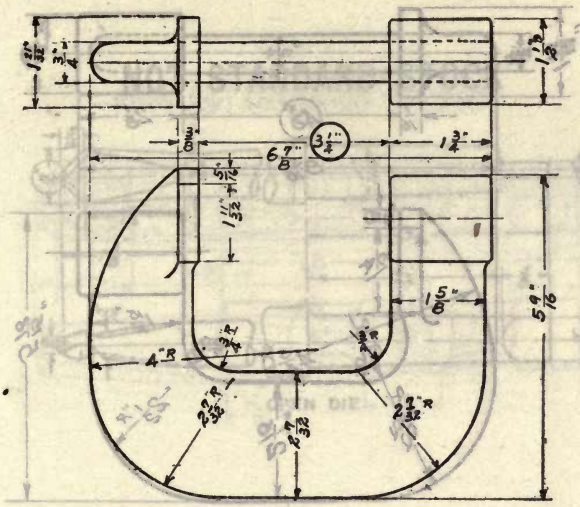

CLAMP, "C," 3 1/4"

Weight, lbs. **Die number, 1774-Y**
Former die number, (1118)

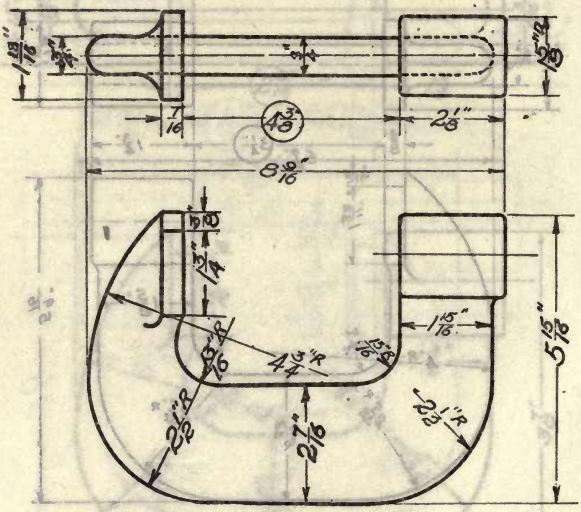

CLAMP, "C," 4 3/8"

Weight, lbs. Die number, 1775-Y
Former die number, (1119)

NOT STANDARD STOCK

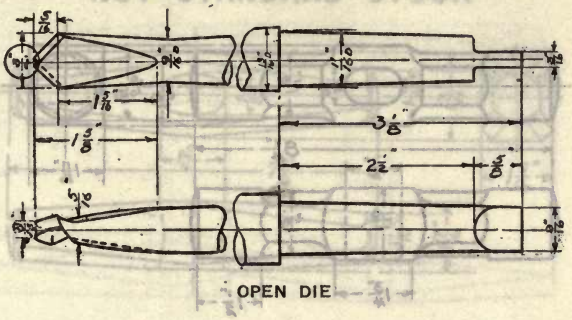

DRILL, 3/4″

For pneumatic drill

Weight, lbs. **Die number, 1776-Y**
Former die number, (292)

NOT STANDARD STOCK

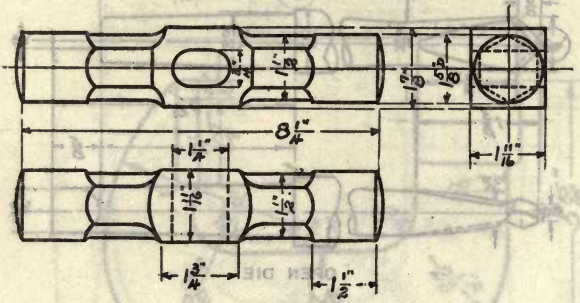

HAMMER, FURNACE, 5-POUND

Weight (steel), 5.0 lbs. **Die number, 1777-Y**
Former die number, (102)

NOT STANDARD STOCK

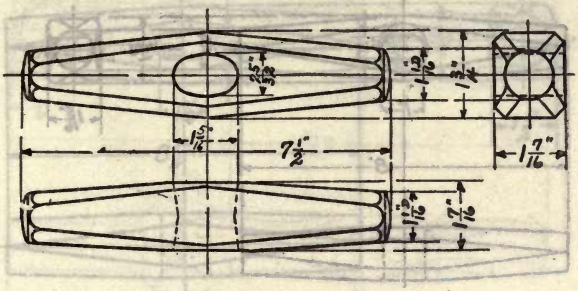

HAMMER, RIVETING, 3-POUND

Weight (steel), 3.0 lbs. **Die number, 1778-Y**
Former die number, (101)

NOT STANDARD STOCK

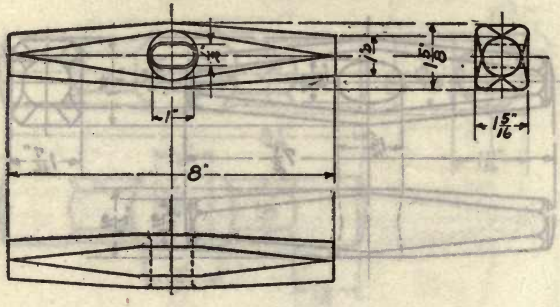

HAMMER, RIVETING, 3 3/4-POUND

Weight (steel), 3.75 lbs. **Die number, 1779-B**
Former die number, (7)

NOT STANDARD STOCK

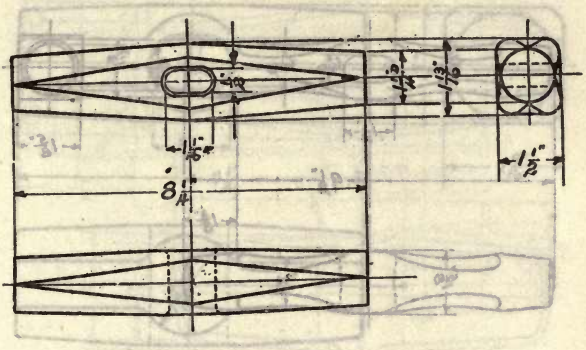

HAMMER, RIVETING, 5-POUND

Weight (steel), 5.0 lbs. **Die number, 1780-B**
Former die number, (5)

NOT STANDARD STOCK

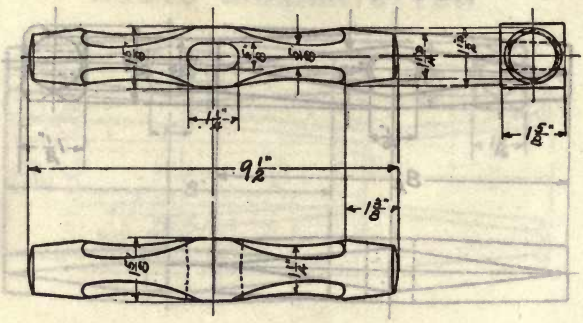

HAMMER, RIVETING

Weight, lbs.

Die number, 1781-M
Former die number, (9-26)

NOT STANDARD STOCK

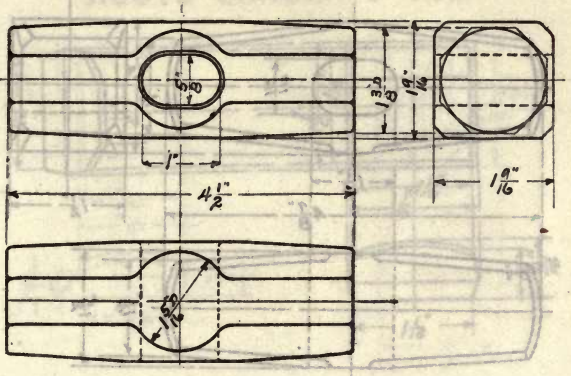

HAMMER, SHIP-FITTER'S, 2 1/4-POUND

Weight (steel), 2.25 lbs.

Die number, 1782-B
Former die number, (6)

NOT STANDARD STOCK

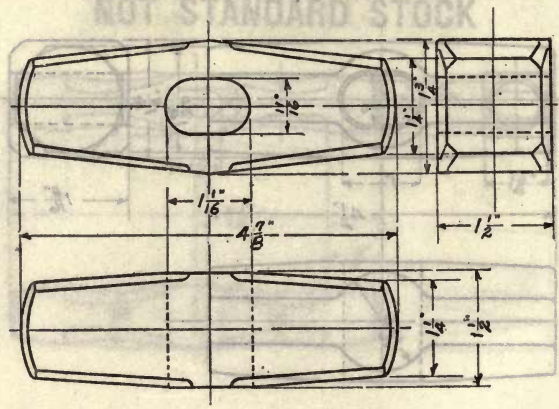

HAMMER, CHIPPING, 2.5-POUND

Weight (steel), 2.5 lbs.

Die number, 1783-Y
Former die number, (103)

NOT STANDARD STOCK

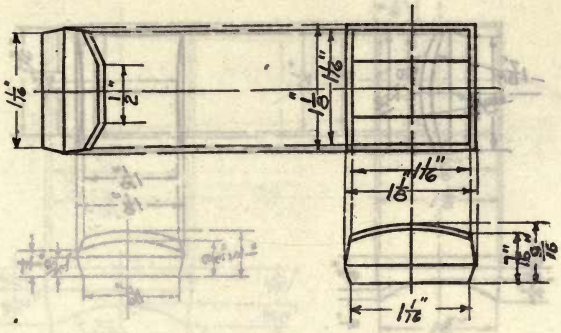

NIPPERS, ROPE WALK

Weight, lbs. **Die number, 1784-B**
Former die number, (145)

NOT STANDARD STOCK

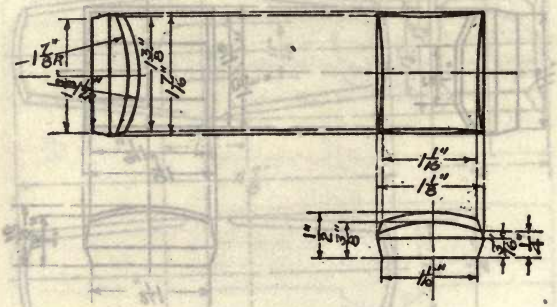

NIPPERS, ROPE WALK

Weight (steel), 0.25 lb. **Die number, 1785-B**
Former die number, (160)

NOT STANDARD STOCK

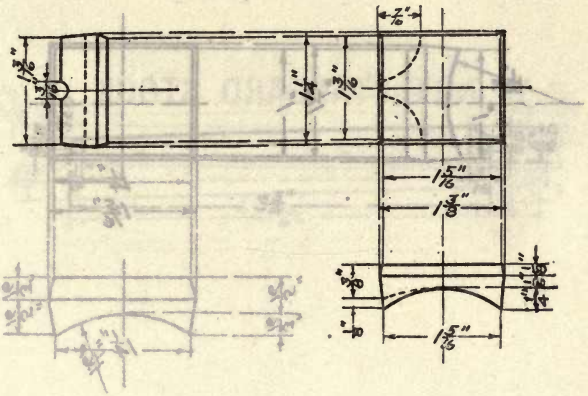

NIPPERS, ROPE WALK

Weight (steel), 0.25 lb. **Die number, 1786-B**
Former die number, (159)

NOT STANDARD STOCK

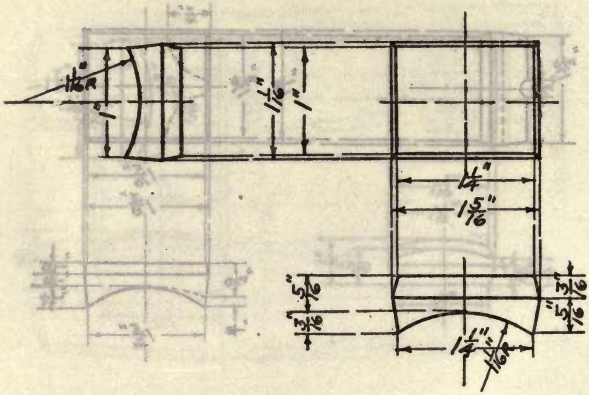

NIPPERS, ROPE WALK

Weight, lbs. **Die number, 1787-B**
Former die number, (144)

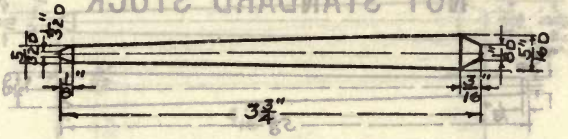

PIN, DRIFT, 1/4″

Weight (steel), 0.05 lb. **Die number, 1788-N**
Former die number, (9-9)

NOT STANDARD STOCK

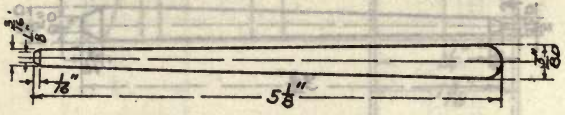

PIN, DRIFT, 5/16″

Weight (steel), 0.13 lb. **Die number, 1789-B**
Former die number, (100)

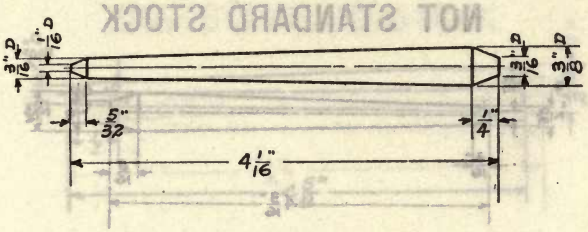

PIN, DRIFT, 5/16″

Weight (steel), 0.08 lb. **Die number, 1790-N.**
Former die number, (9-10)

NOT STANDARD STOCK

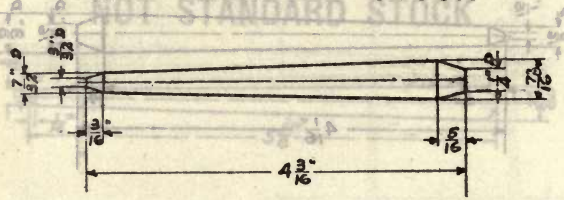

PIN, DRIFT, 3/8″

Weight (steel), 0.08 lb. **Die number, 1791-N**
Former die number, (9-11)

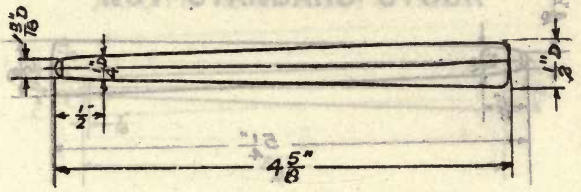

PIN, DRIFT, 3/8″

Weight (steel), 0.25 lb. Die number, 1792-YM
Former die numbers, (187-1) (9-18)

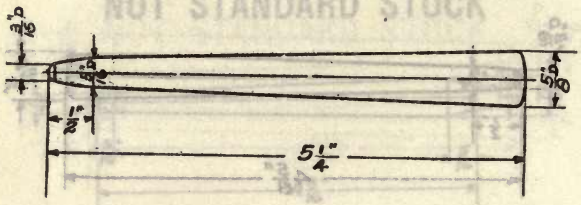

PIN, DRIFT, 1/2″

Weight (steel), 0.32 lb. Die number, 1793-YM
Former die numbers, (187-2) (9-19)

NOT STANDARD STOCK

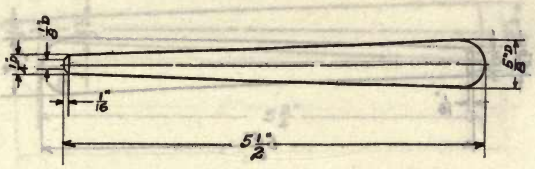

PIN, DRIFT, 1/2″

Weight (steel), 0.31 lb. **Die number, 1794-B**
Former die number, (100)

NOT STANDARD STOCK

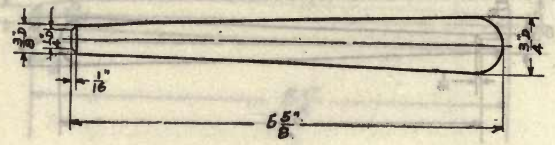

PIN, DRIFT, 5/8″

Weight (steel), 0.44 lb. **Die number, 1795-B**
Former die number, (100)

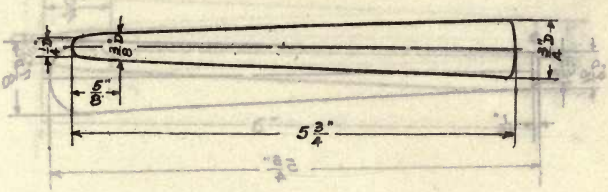

PIN, DRIFT, 5/8″

Weight (steel), 0.50 lb. Die number, 1796-YM
Former die numbers, (187-3) (9-20)

NOT STANDARD STOCK

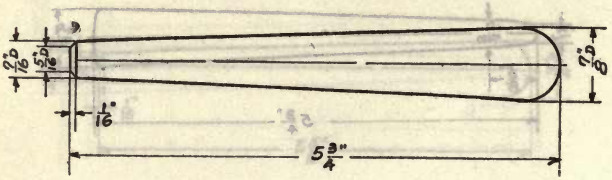

PIN, DRIFT, 3/4″

Weight (steel), 0.60 lb. Die number, 1797-B
Former die number, (100)

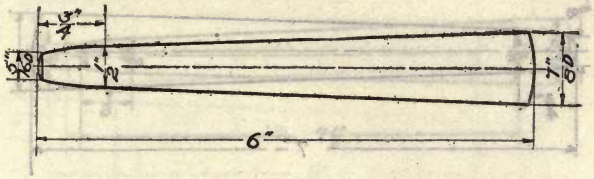

PIN, DRIFT, 3/4″

Weight (steel), 0.75 lb. Die number, 1798-YM
Former die numbers, (187-4) (9-21)

NOT STANDARD STOCK

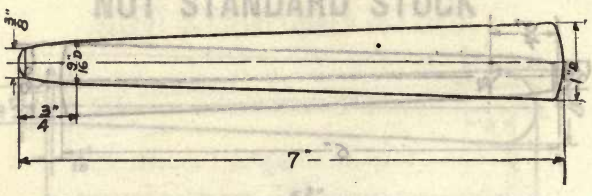

PIN, DRIFT, 7/8″

Weight (steel), 1.06 lbs. Die number, 1799-YM
Former die numbers, (187-5) (9-22)

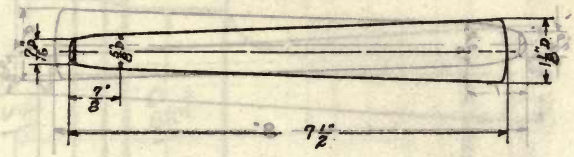

PIN, DRIFT, 1″

Weight (steel), 1.32 lbs. **Die number, 1800-YM**
Former die numbers, (187-6) (9-23)

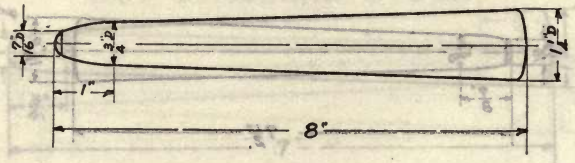

PIN, DRIFT, 1 1/8″

Weight (steel), 1.63 lbs. Die number, 1801-YM
Former die numbers, (188) (9-24)

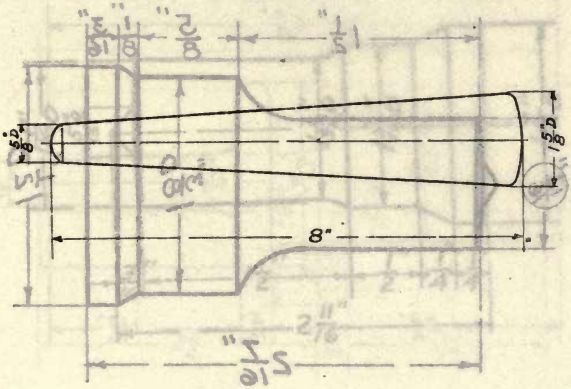

PIN, DRIFT, 1 1/4″

Weight, lbs. **Die number, 1802-Y**
Former die number, (171)

NOT STANDARD STOCK

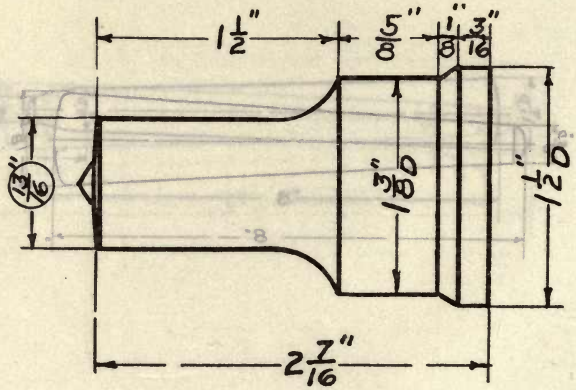

PUNCH, 13/16″

Weight (steel), 0.53 lb. **Die number, 1803-P**
Former die number, (256)

NOT STANDARD STOCK

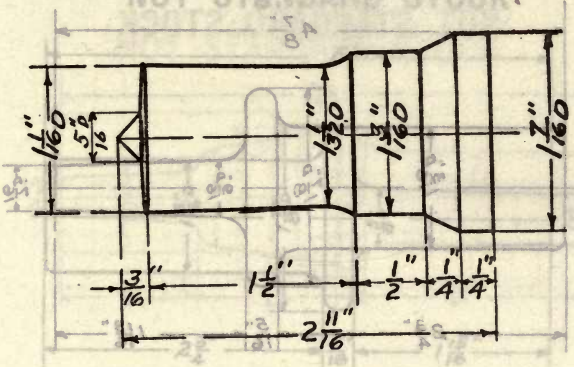

PUNCH, 1 1/16"

Weight (steel), 0.75 lb. **Die number, 1804-Y**
Former die number, (199)

NOT STANDARD STOCK

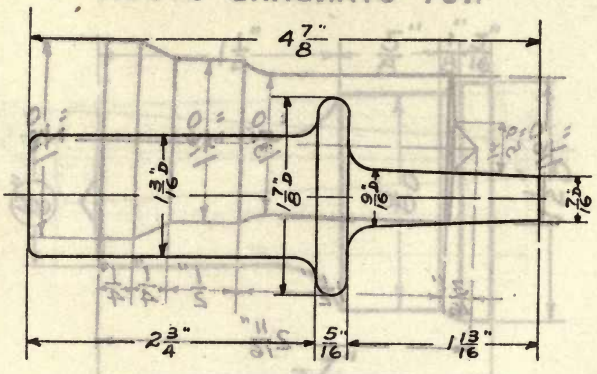

PUNCH, BACKINGOUT, 1/2″

Weight (steel), 1.13 lbs. **Die number, 1805-N.**
Former die number, (9-4)

NOT STANDARD STOCK

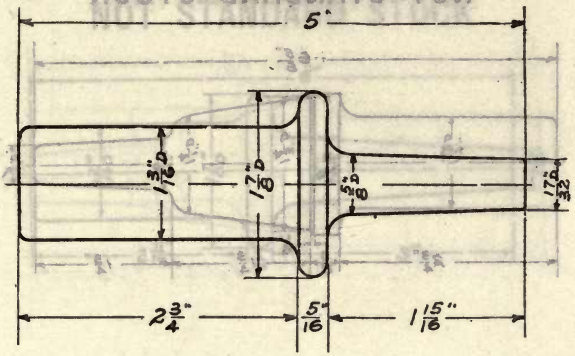

PUNCH, BACKINGOUT, RIVET, 5/8"

Weight (steel), 1.25 lbs. **Die number, 1806-N**
Former die number, (9-3)

NOT STANDARD STOCK

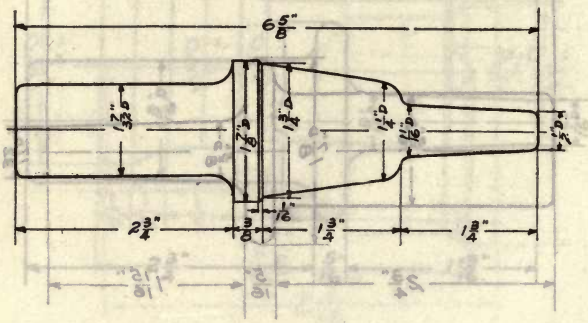

PUNCH, BACKINGOUT, RIVET, 5/8"

Weight, lbs. **Die number, 1807-M**
Former die number, (9-16)

NOT STANDARD STOCK

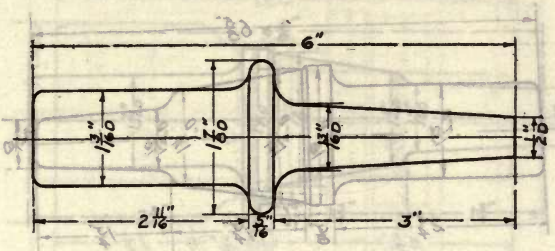

PUNCH, BACKINGOUT, RIVET, 3/4″

Weight (steel), 4.5 lbs. **Die number, 1808-N**
Former die number, (9-47)

NOT STANDARD STOCK

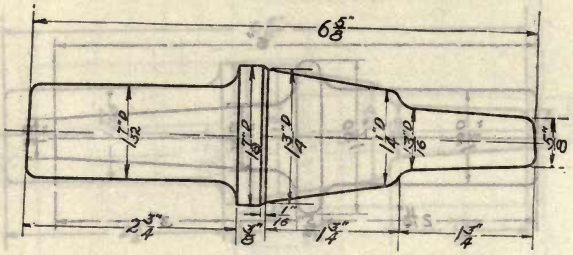

PUNCH, BACKINGOUT, RIVET, 3/4″

Weight, lbs. **Die number, 1809-M**
Former die number, (9-15)

NOT STANDARD STOCK

NOT STANDARD STOCK

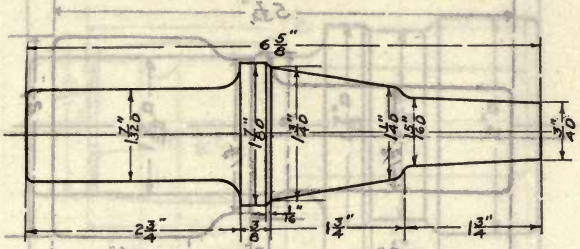

PUNCH, BACKINGOUT, RIVET, 7/8″

Weight; lbs.

Die number, 1810-M
Former die number, (9-5)

NOT STANDARD STOCK

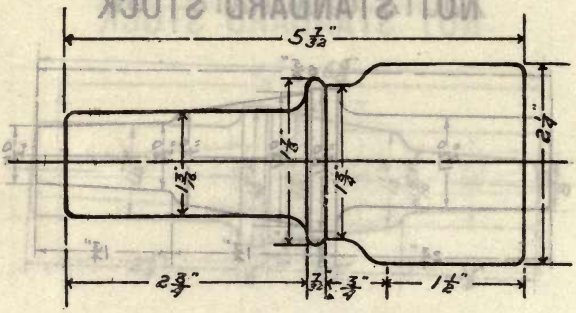

SET, RIVET

Weight (steel), 1.5 lbs. **Die number, 1811-N**
Former die number, (9-6)

NOT STANDARD STOCK

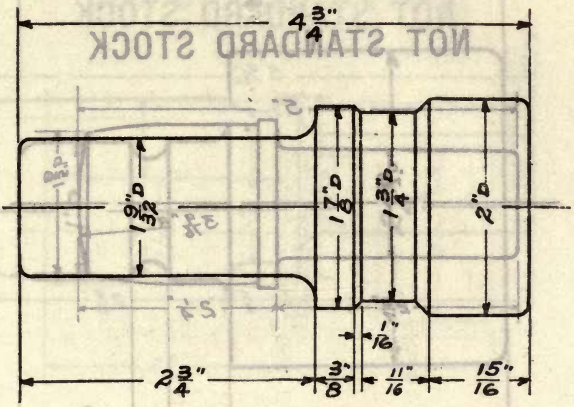

SET, RIVET

Weight, lbs. **Die number, 1812-M**
Former die number, (9-6)

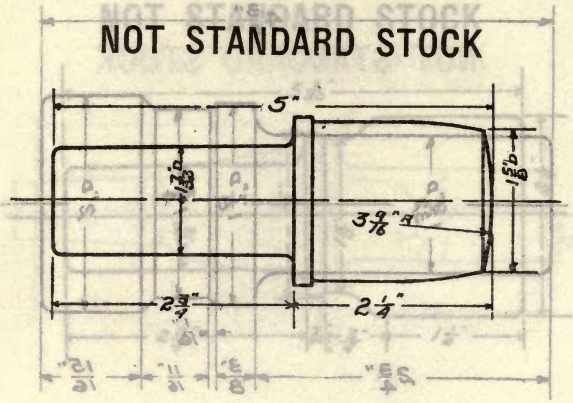

SET, RIVET

Weight (steel), 2.4 lbs.

Die number, 1813-Y
Former die number, (202)

NOT STANDARD STOCK

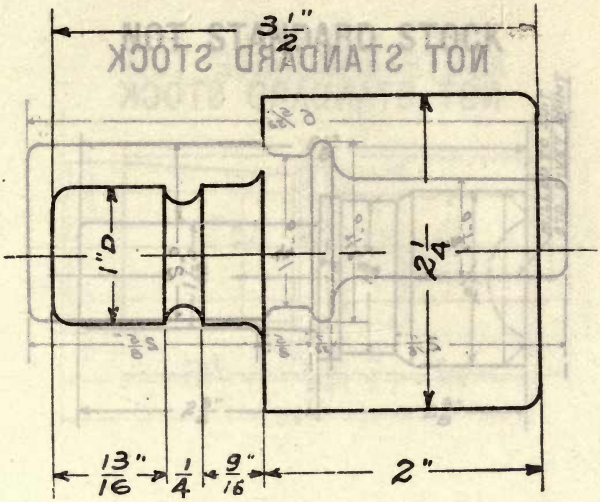

SET, RIVET

For compression riveter

Weight, lbs. **Die number, 1814-M**
Former die number, (9-7)

NOT STANDARD STOCK

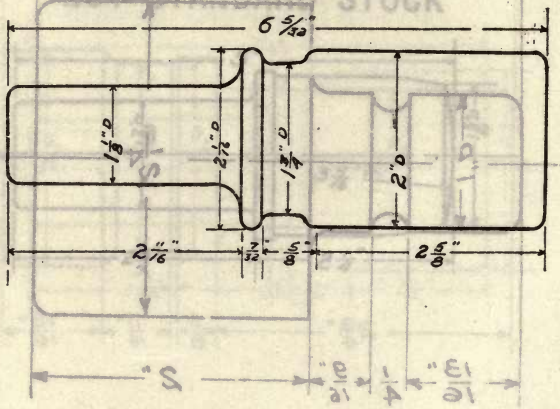

SET, RIVET

For yoke riveter

Weight (steel), 1.5 lbs. **Die number, 1815-N**
Former die number, (9-7)

NOT STANDARD STOCK

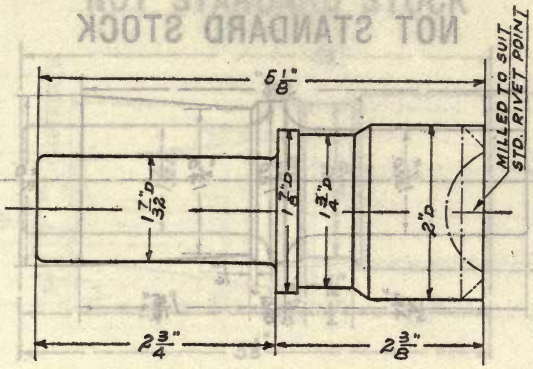

SET, RIVET, BUTTON, 5/8″, 3/4″, 7/8″, and 1″ and CSK, 3/4″, 1″

Weight (steel), 3.3 lbs. **Die number, 1816-Y**
Former die number, (195)

NOT STANDARD STOCK

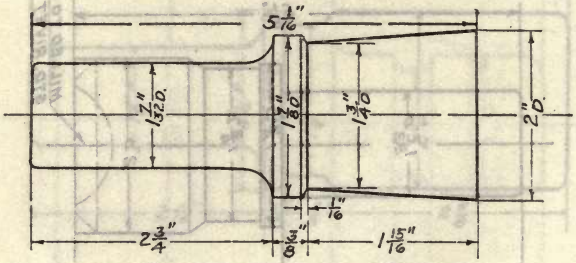

SET, RIVET, BUTTON, 3/4″ and 7/8″

Weight, lbs. Die number, 1817-M
Former die number, (9-13 & 14)

NOT STANDARD STOCK

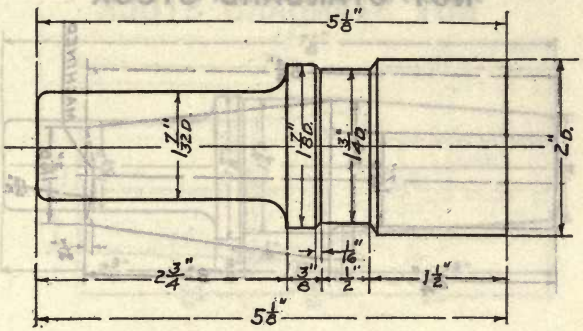

SET, RIVET, BUTTON, 1″

Weight, lbs. **Die number, 1818-M**
Former die number, (9-4)

NOT STANDARD STOCK

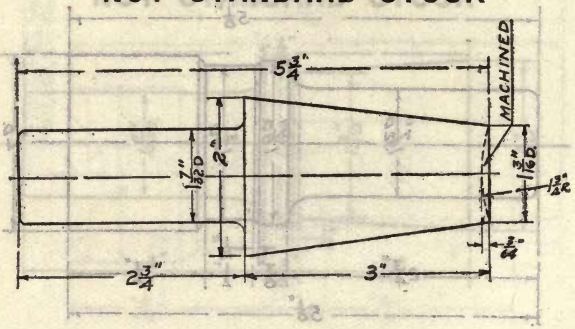

SET, RIVET, COUNTERSUNK, 5/8″

For holding-on

Weight (steel), 2.8 lbs. **Die number, 1819-Y**
Former die number, (197)

NOT STANDARD STOCK

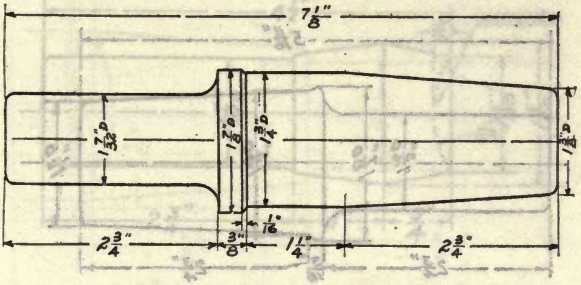

SET, RIVET, COUNTERSUNK

Weight, **lbs.** **Die number, 1820-M**
Former die number, (9-2)

NOT STANDARD STOCK

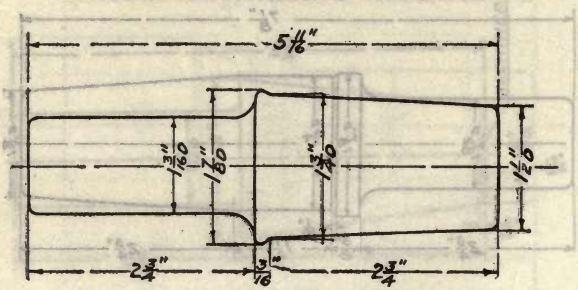

SET, RIVET, COUNTERSUNK

Weight (steel), 1.38 lbs. **Die number, 1821-N**
Former die number, (9-5)

NOT STANDARD STOCK

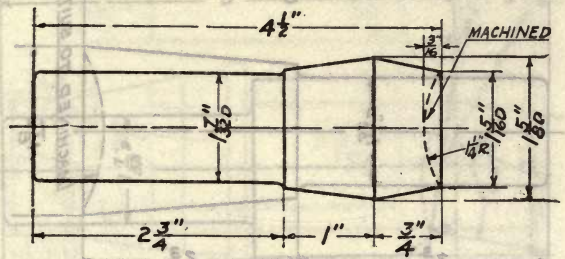

SET, RIVET, COUNTERSUNK, 5/8″

For holding-on

Weight (steel), 1.7 lbs. **Die number, 1822-Y**
Former die number, (196)

NOT STANDARD STOCK

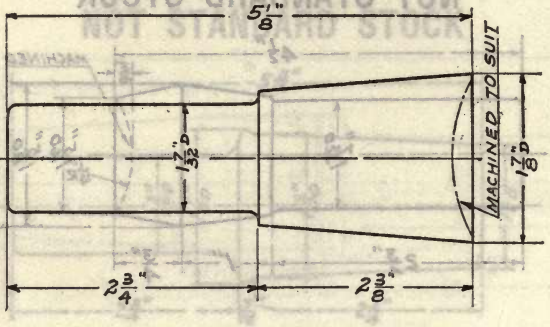

SET, RIVET, COUNTERSUNK, 3/4″, 7/8″, AND 1″

For holding-on

Weight (steel), 2.7 lbs. Die number, 1823-Y
Former die number, (198-11 & 12)

NOT STANDARD STOCK

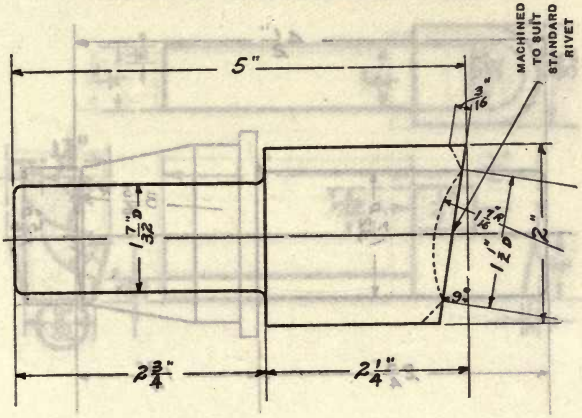

SET, RIVET, COUNTERSUNK, SPECIAL, 1″

For holding-on

Weight (steel), 3.3 lbs. Die number, 1824-Y
Former die number, (195-20)

NOT STANDARD STOCK

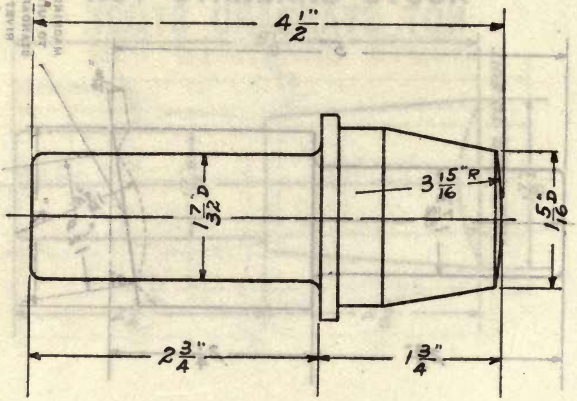

SET, RIVET, DECK, 1 1/16″

Weight (steel), 2.3 lbs. **Die number, 1825-Y**
Former die number, (201)

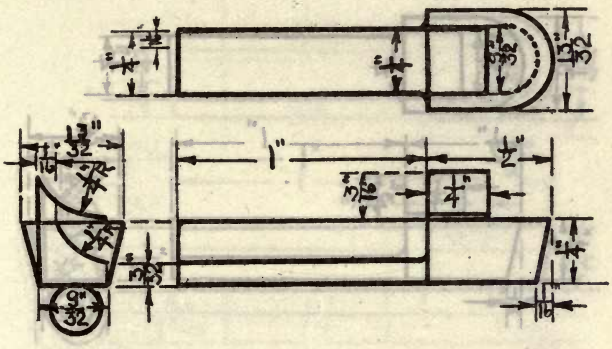

STOP, BLADE, FEMALE, LEFT-HAND, 9/32″

For cylinder joint

Weight, lbs. **Die number, 1826-Y**
Former die number, (1135-2)

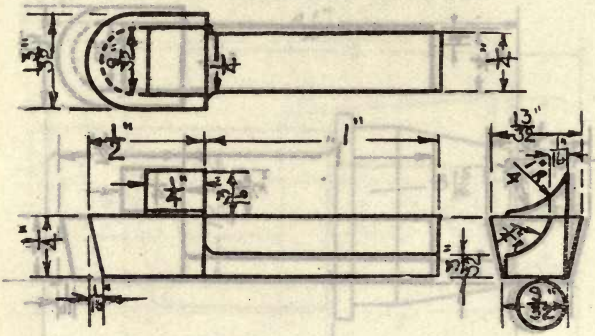

STOP, BLADE, FEMALE, RIGHT-HAND, 9/32″

For cylinder joint.

Weight, lbs. Die number, 1827-Y
Former die number, (1135-1)

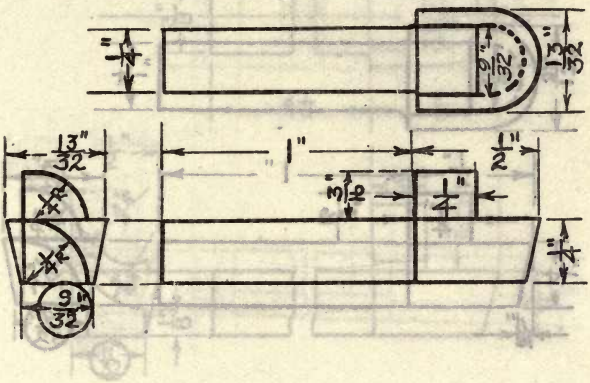

STOP, BLADE, MALE, LEFT-HAND, 9/32″

For cylinder joint

Weight, lbs. **Die number, 1828-Y**
Former die number, (1135-4)

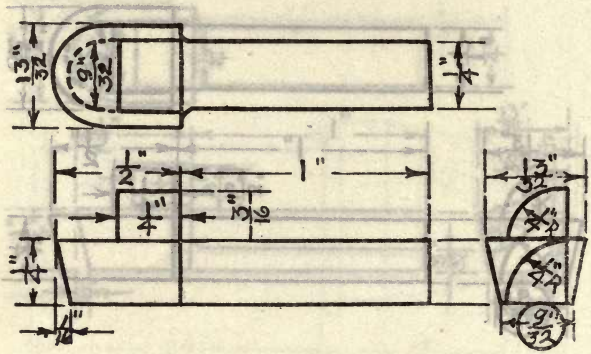

STOP, BLADE, MALE, RIGHT-HAND, 9/32″

For cylinder joint

Weight, lbs. **Die number, 1829-Y**
Former die number, (1135-3)

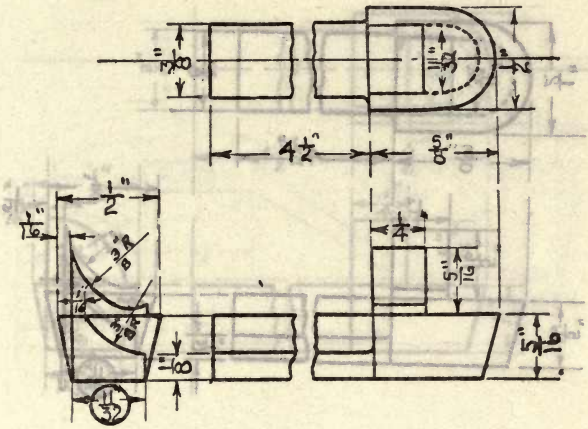

STOP, BLADE, FEMALE, LEFT-HAND, 11/32″

For cylinder joint

Weight, **lbs.** **Die number, 1830-Y**
Former die number, (1136-2)

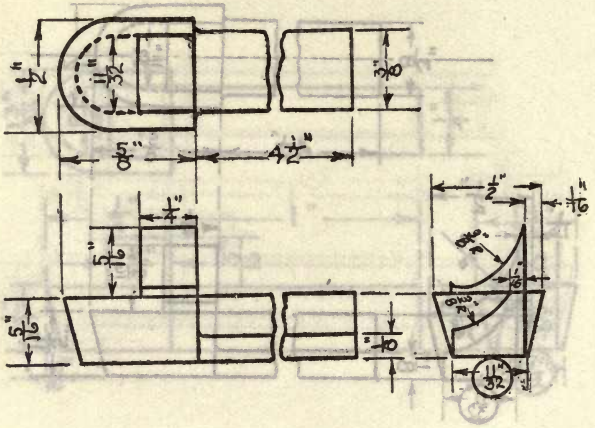

STOP, BLADE, FEMALE, RIGHT-HAND, 11/32″

For cylinder joint

Weight, lbs. Die number, 1831-X
Former die number, (1136-1)

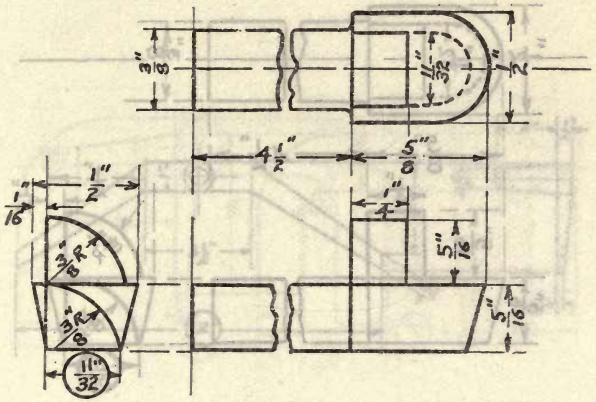

STOP, BLADE, MALE, LEFT-HAND, 11/32″

For cylinder joint

Weight, lbs. Die number, 1832-Y
Former die number, (1136-4)

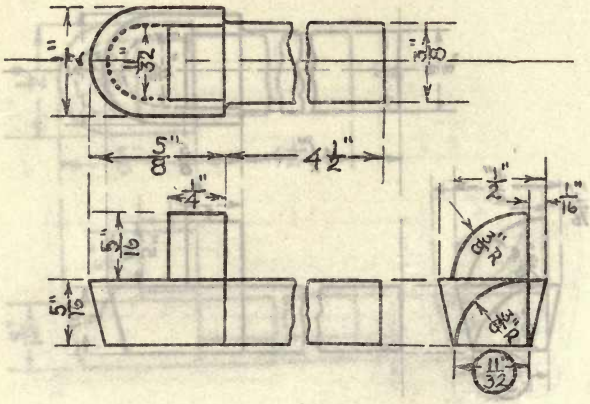

STOP, BLADE, MALE, RIGHT-HAND, 11/32″

For cylinder joint

Weight, **lbs.** **Die number, 1833-Y**
Former die number, (1136-3)

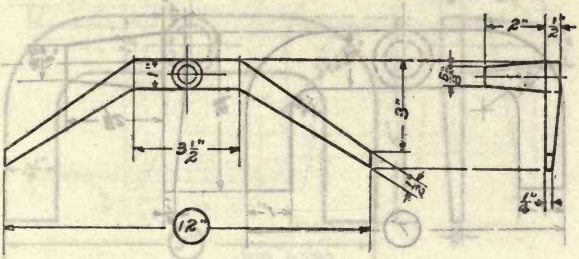

STRONGBACK, HOE, CLEANING, ASH, 12″

Weight, lbs. **Die number, 1834-Y**
Former die number, (1133)

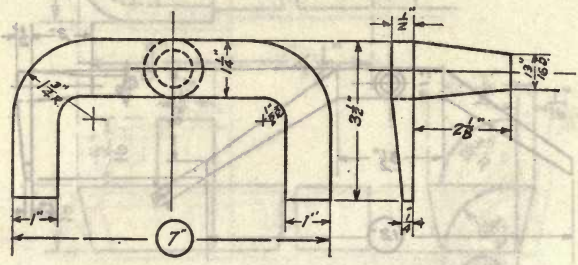

STRONGBACK, HOE, CLEANING, FIRE, 7″

Weight, lbs. **Die number, 1835-Y**
Former die number, (1132)

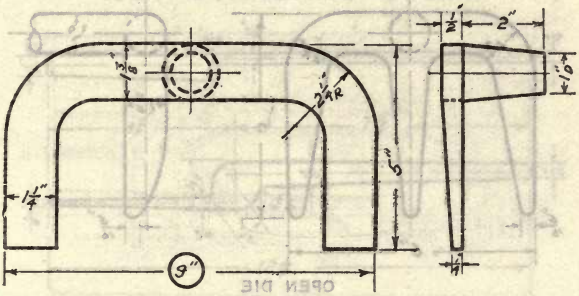

STRONGBACK, HOE, CLEANING, FIRE, 9″

Weight, lbs. **Die number, 1836-Y**
Former die number, (1131)

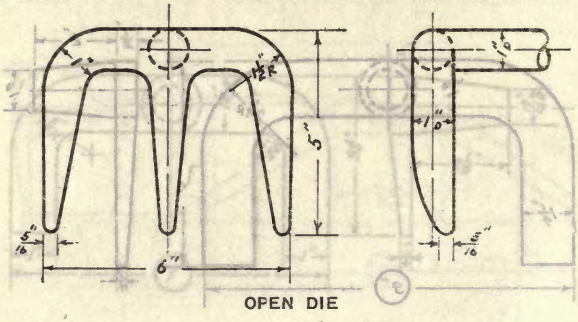

OPEN DIE

CLAW, DEVIL

Weight, lbs. **Die number, 1837-Y**
Former die number, (1134)

NOT STANDARD STOCK

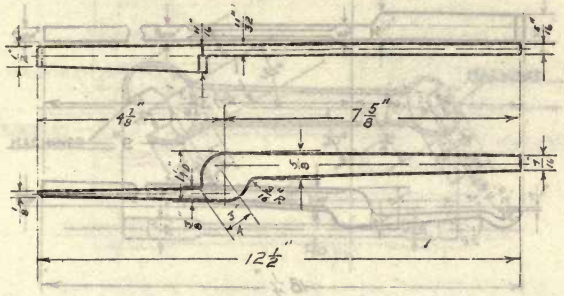

TONGS, RIVET, 12″

Weight (steel), 0.69 lb. **Die number, 1838-X**
Former die number, (403)

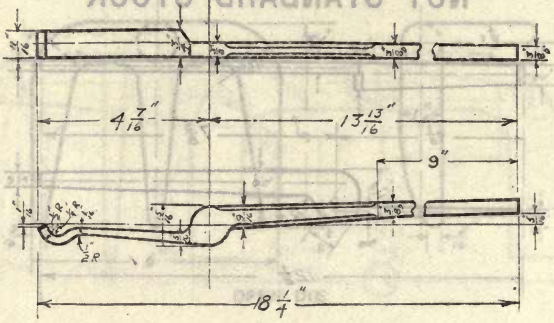

TONGS, RIVET, 18″

Weight (steel), 1.25 lbs. **Die number, 1839-NM**
Former die numbers, (9-28) (9-25)

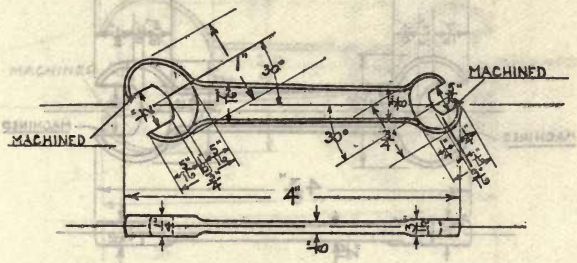

WRENCH, MACHINE, DOUBLE-ENDED, 30°, SPECIAL AND 1/4″

Weight, lbs. Die number, 1840-Y
Former die number, (1018)

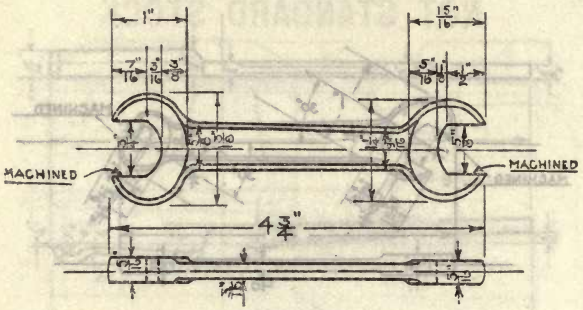

WRENCH, MACHINE, DOUBLE-ENDED, STRAIGHT, 5/16″ AND 3/8″

Weight, lbs. **Die number, 1841-Y**
Former die number, (1017)

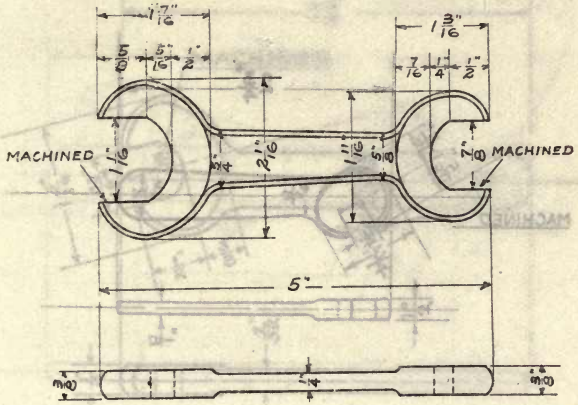

WRENCH, MACHINE, DOUBLE-ENDED, STRAIGHT, 1/2″ AND 5/8″

Weight, lbs. **Die number, 1842-Y**
Former die number, (1016)

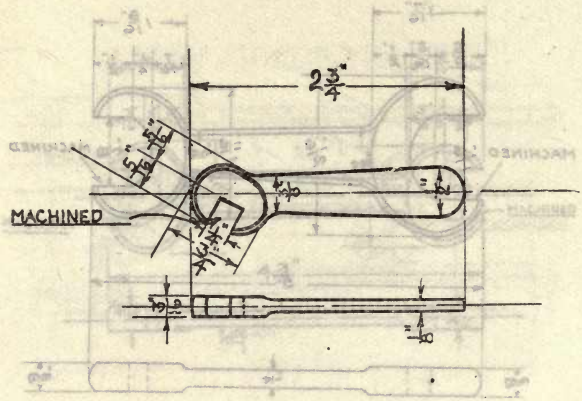

WRENCH, MACHINE, SINGLE-ENDED, 60°, SPECIAL, 1/4″ OPENING

For engines

Weight, lbs. **Die number, 1843-Y**
Former die number, (1019)

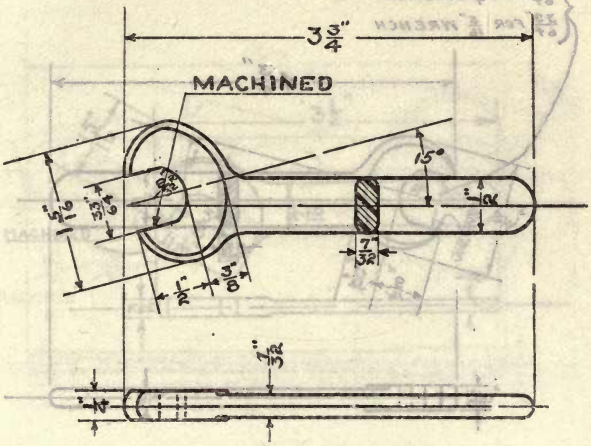

WRENCH, MACHINE, SINGLE-ENDED, 15°, 1/4″

NOTE.—Use die No. 1845 when this die is ordered

Weight (steel), 1.0 lb. **Die number, 1844-N**
Former die number, (9-31)

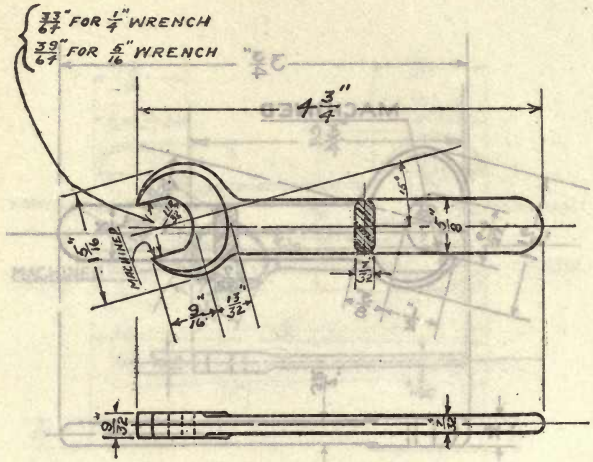

WRENCH, MACHINE, SINGLE-ENDED, 15°, 1/4″ AND 5/16″

Weight (steel), 1.0 lb. **Die number, 1845-NM**
Former die number, (9-32)

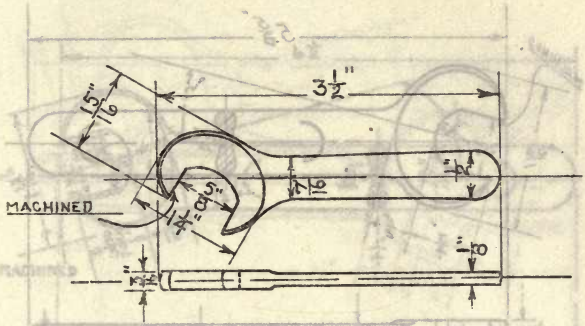

WRENCH, MACHINE, SINGLE-ENDED, 60°, 5/16″

For engines

Weight, lbs. **Die number, 1846-Y**
Former die number, (1020)

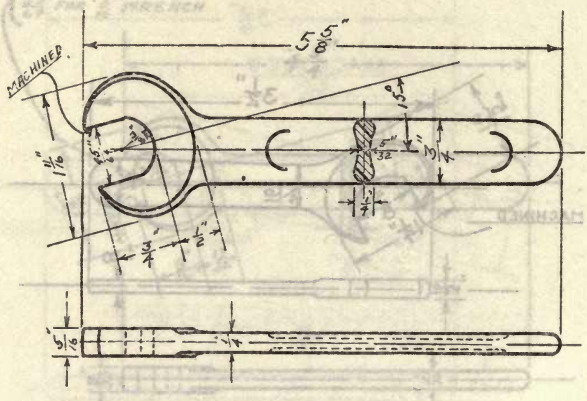

WRENCH, MACHINE, SINGLE-ENDED, 15°, 3/8″

NOTE.—Use die No. 1848 when this die is ordered

Weight, lbs. Die number, 1847-N
Former die number, (9-33)

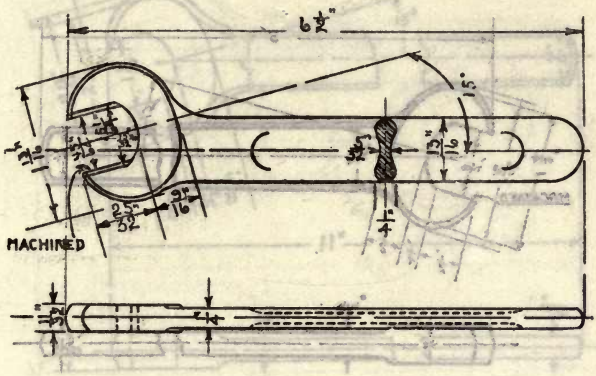

WRENCH, MACHINE, SINGLE-ENDED, 15°, 3/8″ AND 7/16″

Weight (steel), 1.5 lbs. **Die number, 1848-N**
Former die number, (9-34)

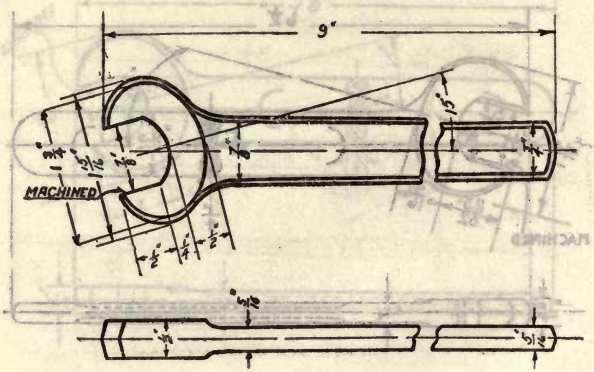

WRENCH, MACHINE, SINGLE-ENDED, 15°, 1/2″

Weight (steel), 0.69 lb. **Die number, 1849-Y.**
Former die number, (470)

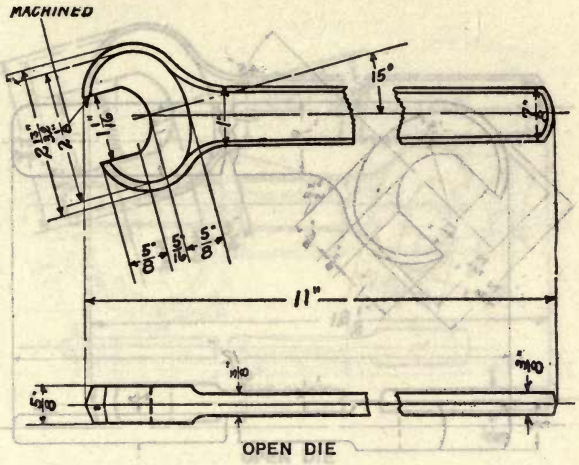

WRENCH, MACHINE, SINGLE-ENDED, 15°, 5/8″

Weight (steel), 1.32 lbs. **Die number, 1850-Y**
Former die number, (471)

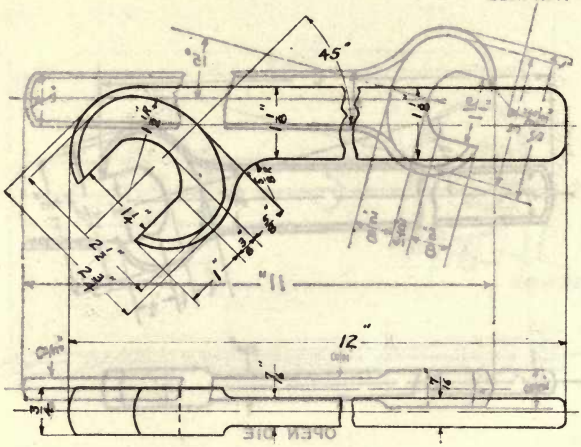

WRENCH, MACHINE, SINGLE-ENDED, 45°, 3/4″

Weight (steel), 2.09 lbs. **Die number, 1851-Y**
Former die number, (244)

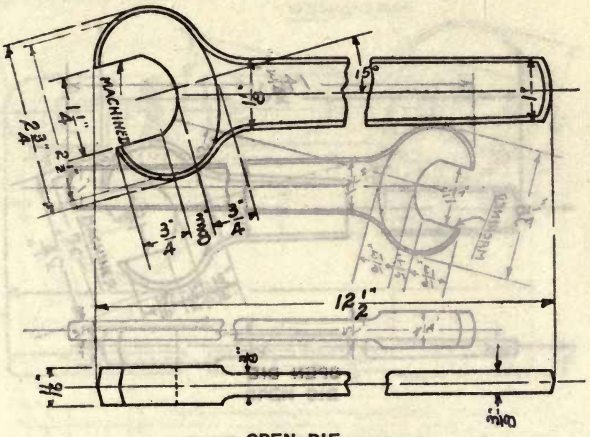

OPEN DIE

WRENCH, MACHINE, SINGLE-ENDED, 15°, 3/4″

Weight (steel), 1.75 lbs. **Die number, 1852-Y**
Former die number, (472)

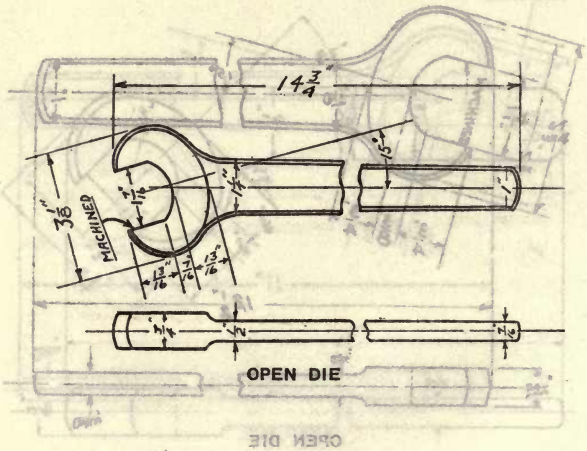

WRENCH, MACHINE, SINGLE-ENDED, 15°, 7/8″

Weight (steel), 2.56 lbs. **Die number, 1853-X**
Former die number, (114)

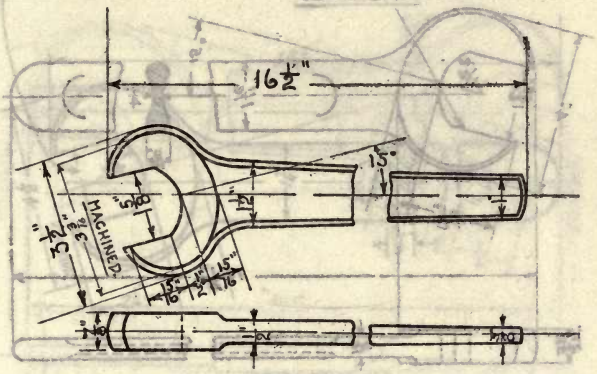

WRENCH, MACHINE, SINGLE-ENDED, 15°, 1″

Weight (steel), 3.87 lbs. **Die number, 1851-Y**
Former die number, (473)

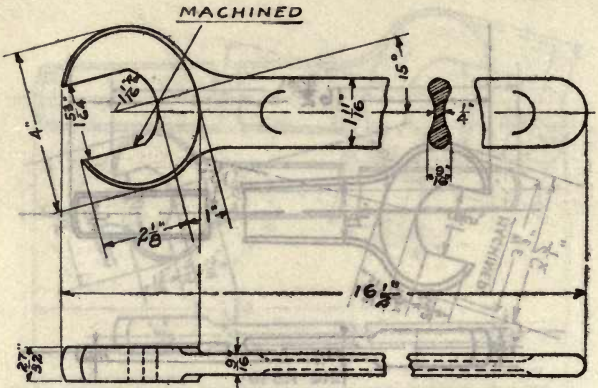

WRENCH, MACHINE, SINGLE-ENDED, 15°, 1 1/8″

NOTE.—Use die No. 1856 when this die is ordered.

Weight, lbs. **Die number, 1855-N**
Former die number, (9-40)

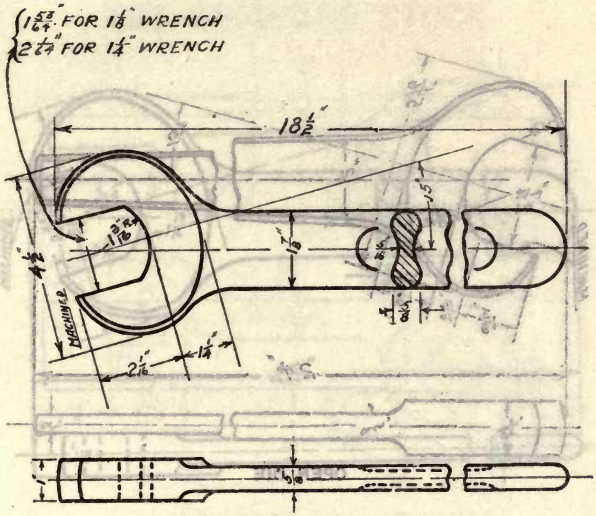

WRENCH, MACHINE, SINGLE-ENDED, 15°, 1 1/8″ AND 1 1/4″

Weight (steel), 9.0 lbs. **Die number, 1856-N**
Former die number, (9-41)

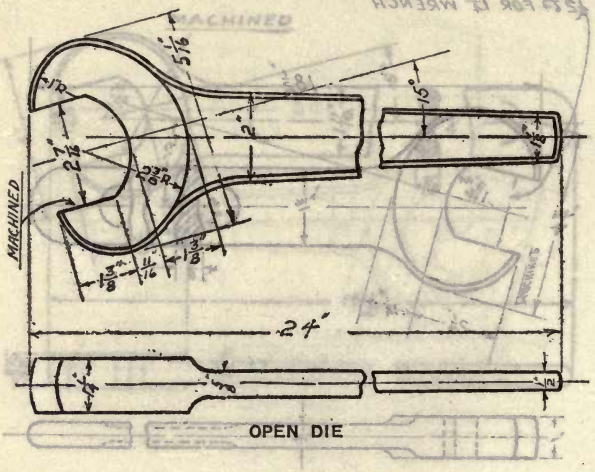

WRENCH, MACHINE, SINGLE-ENDED, 15°, 1 1/2″

Weight, lbs. **Die number, 1857-Y**
Former die number, (474)

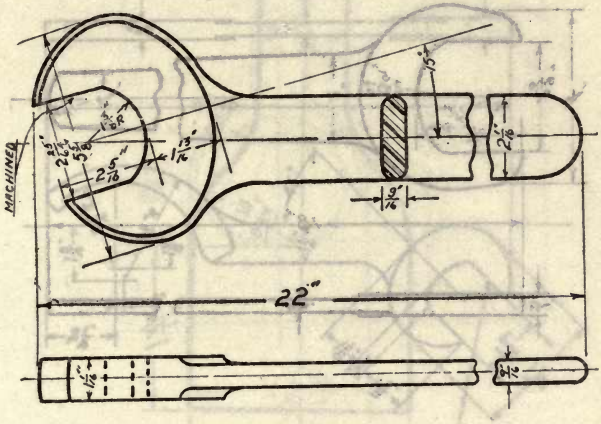

WRENCH, MACHINE, SINGLE-ENDED, 15°, 1 1/2″

Weight (steel), 12.0 lbs. **Die number, 1858-N**
Former die number, (9-42)

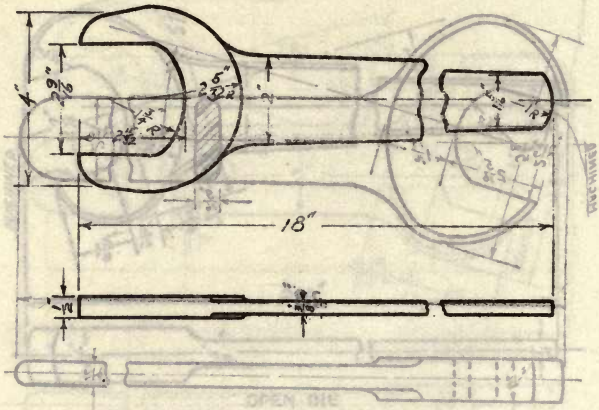

WRENCH, MACHINE, SINGLE-ENDED, STRAIGHT, 1 5/8″

For N. D. mine.

Weight (steel), 5.0 lbs. **Die number, 1859-N**
Former die number, (3-130)

NOT STANDARD STOCK

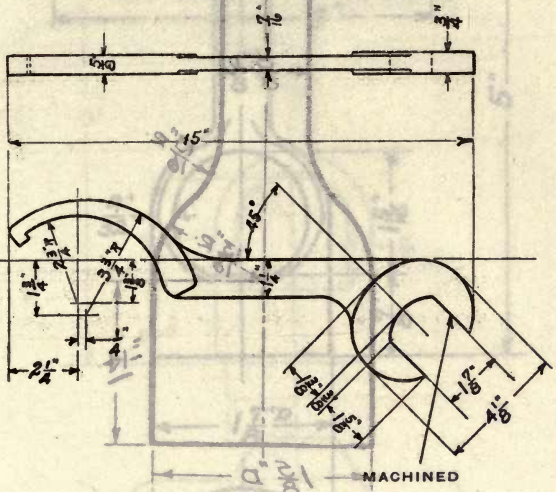

WRENCH AND SPANNER, COMBINATION

For test plug.

Weight (steel), 3.9 lbs.

Die number, 1860-B
Former die number, (252)

NOT STANDARD STOCK

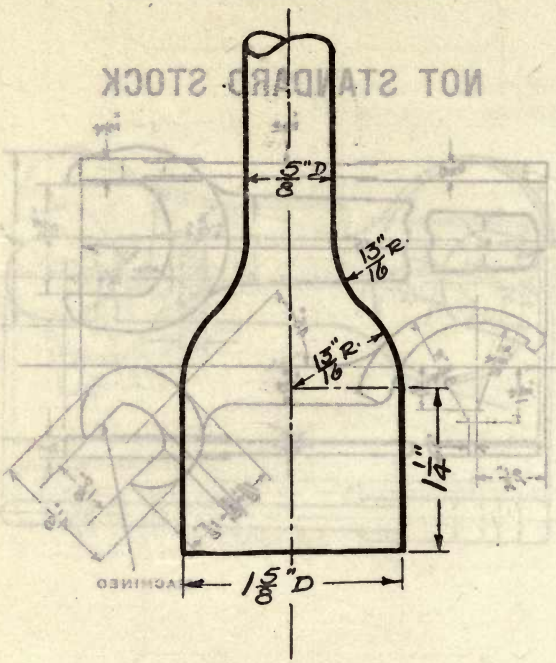

OPEN DIE

WRENCH, SOCKET

For 1/2" and 5/8" square or hexagonal nuts.

Weight, lbs. **Die number, 1861-N**
Former die number, (9-8)

NOT STANDARD STOCK

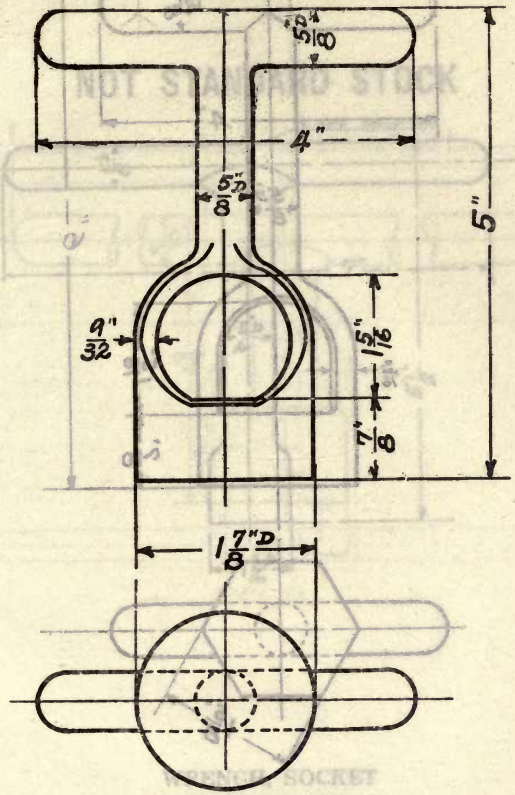

WRENCH, SOCKET

For air ports

Weight, lbs. **Die number, 1862-M**
Former die number, (4-44)

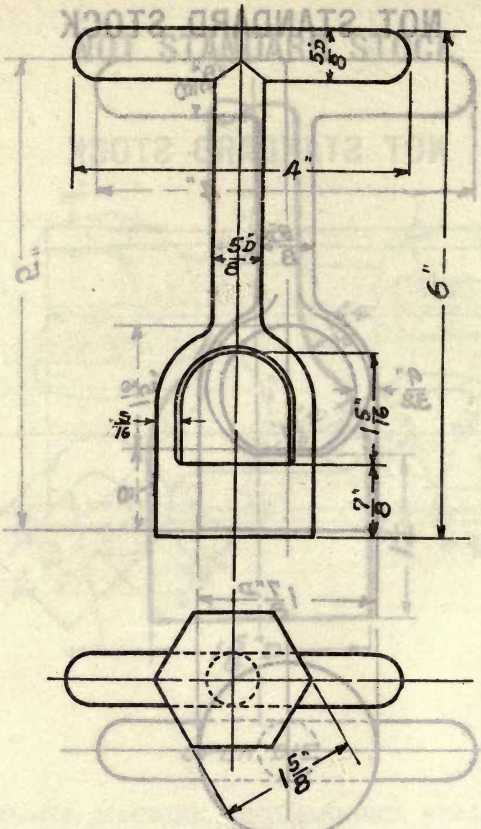

WRENCH, SOCKET

For air ports

Weight (steel), 1.19 lbs. **Die number, 1863-Y**
Former die number, (387)

NOT STANDARD STOCK

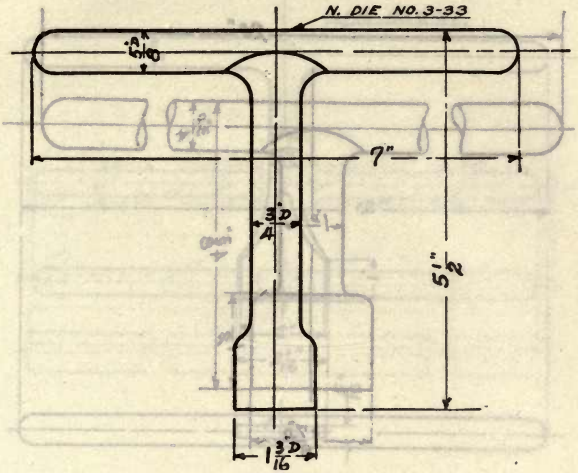

WRENCH, SOCKET

For coal scuttles

Weight (steel), 1.44 lbs. **Die number, 1864-YN**
Former die numbers, (113) (4-23)

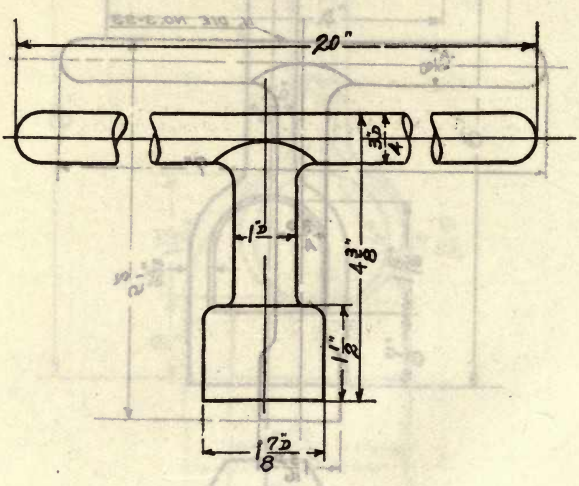

WRENCH, SOCKET

For coal scuttles

Weight (steel), 4.19 lbs. **Die number, 1865-YM**
Former die numbers, (110) (4-23)

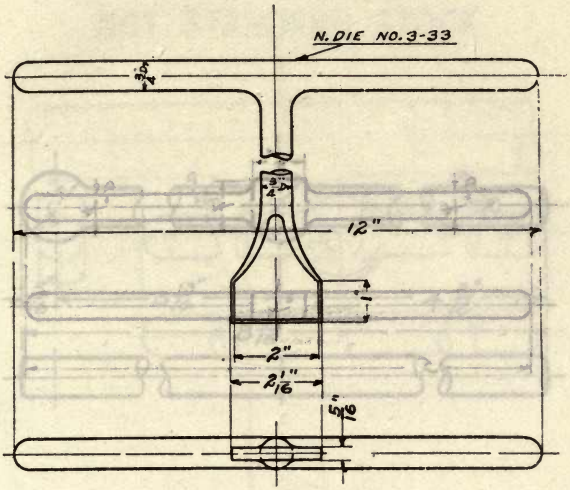

OPEN DIE

WRENCH, "T"

For coal scuttles

Weight lbs. **Die number, 1866-YNM**
Former die numbers, (115) (4-22) (4-22)

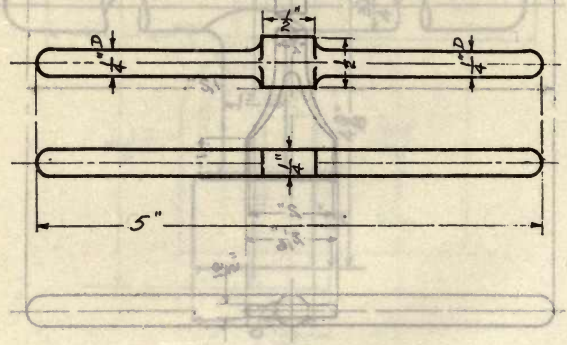

WRENCH, TAP

Weight, **lbs.** **Die number, 1867-Y**
Former die number, (322)

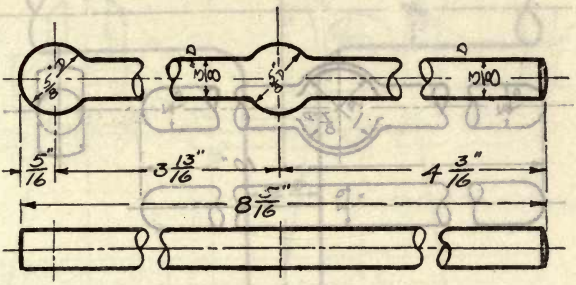

WRENCH, TAP

Weight, ____ **lbs.** **Die number, 1868-Y**
Former die number, (475)

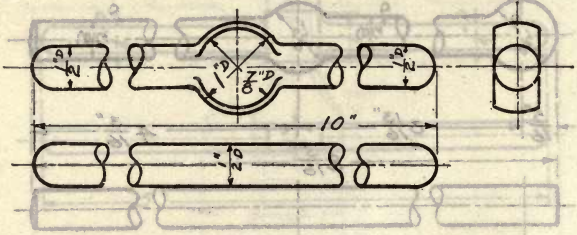

WRENCH, TAP

Weight (steel), 0.63 lb. **Die number, 1869-Y**
Former die number, (323)

NOT STANDARD STOCK

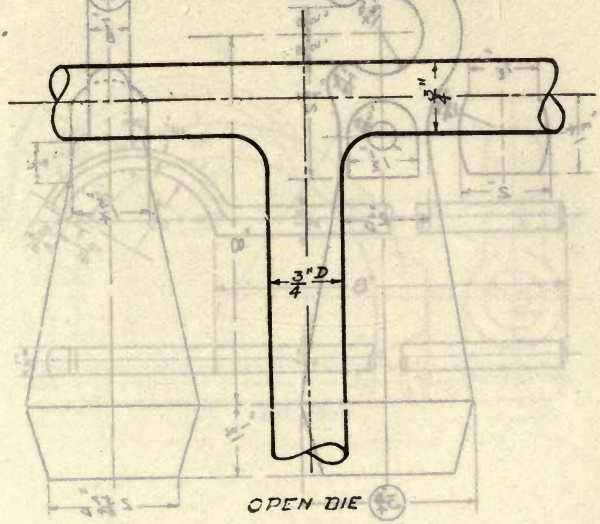

HANDLE, WRENCH, SOCKET AND "T"

Weight, lbs. **Die number, 1870-N**
Former die number, (3-33)

NOT STANDARD STOCK

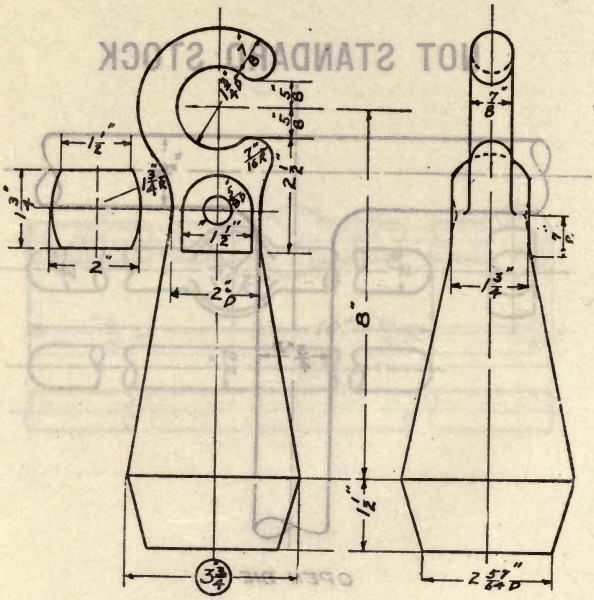

HEAD, STANCHION, AWNING, 3 3/4″

Used with 3″ extra strong pipe

Weight, lbs. **Die number, 1871-Y**
Former die number, (204)

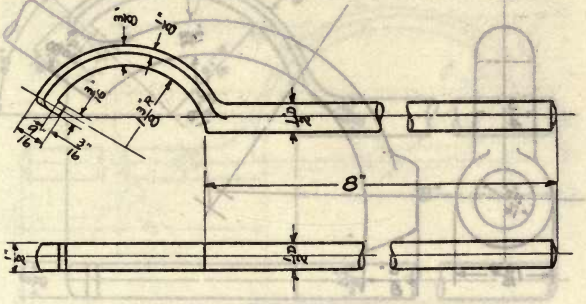

WRENCH, SPANNER, HOSE, 1 1/2″ NAVY STANDARD

Weight (steel), 0.6 lb. **Die number, 1872-N**
Former die number, (9-29)

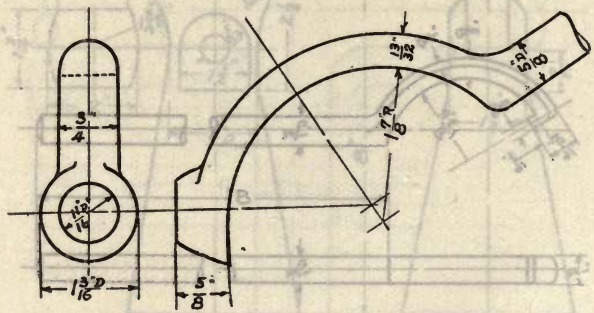

OPEN DIE

WRENCH, SPANNER, HOSE, 2 1/2″

Weight, **lbs.** **Die number, 1873-B**
Former die number, (39)

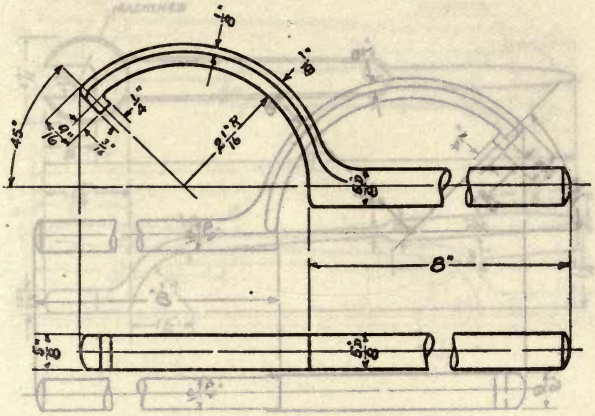

WRENCH, SPANNER, HOSE, 2 1/2″ NAVY STANDARD

For fire hose

Weight (steel), 1.0 lb. **Die number, 1874-N**
Former die number, (9-49)

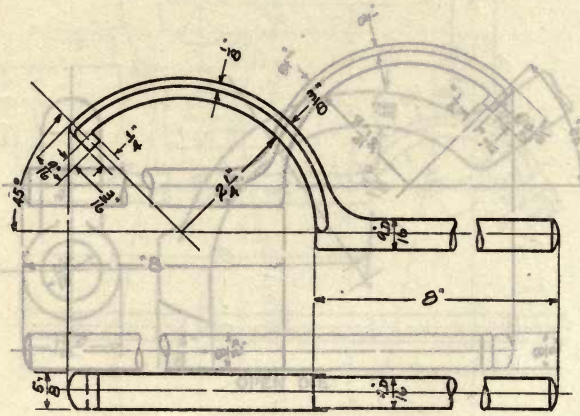

WRENCH, SPANNER, HOSE, 2 1/2″ NAVY STANDARD

For suction hose

Weight (steel), 0.75 lb. **Die number, 1875-N**
Former die number, (9-48)

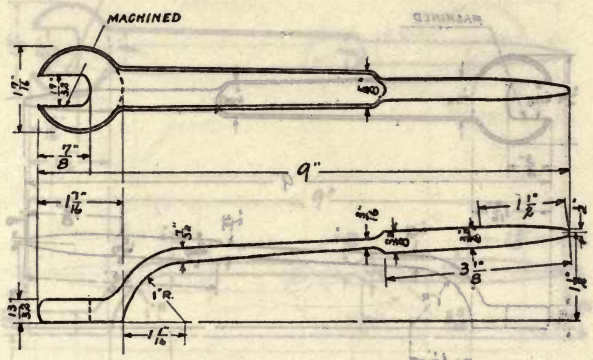

WRENCH, SPUD, 1/4″

NOTE.—Use die No. 1878 when this die is ordered

Weight, lbs. Die number, 1876-N
Former die number, (9-17)

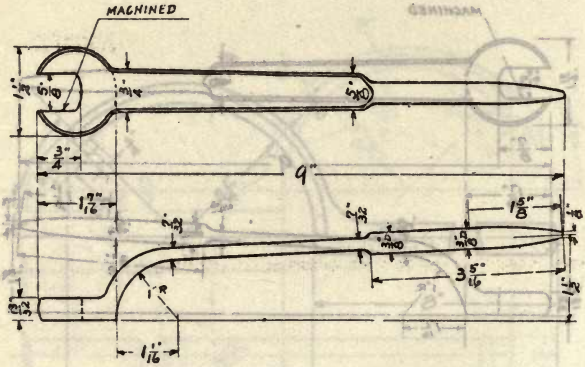

WRENCH, SPUD, 5/16″

NOTE.—Use die No. 1878 when this die is ordered

Weight, lbs. **Die number, 1877-N**
Former die number, (9-18)

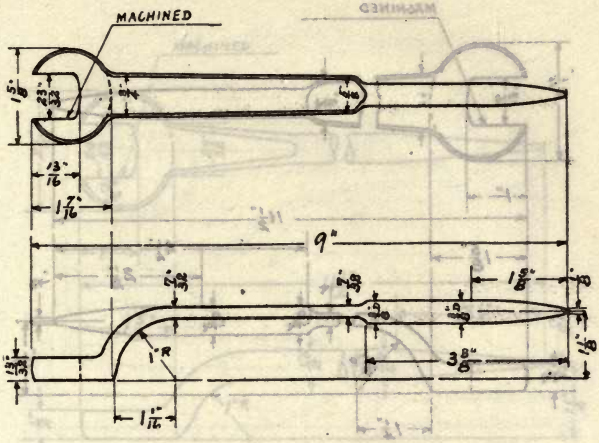

WRENCH, SPUD, 3/8″

Forging used for 1/4″ and 5/16″ wrenches, die Nos. 1876 and 1877

Weight (steel), 0.75 lb. **Die number, 1878-N**
Former die number, (9-19)

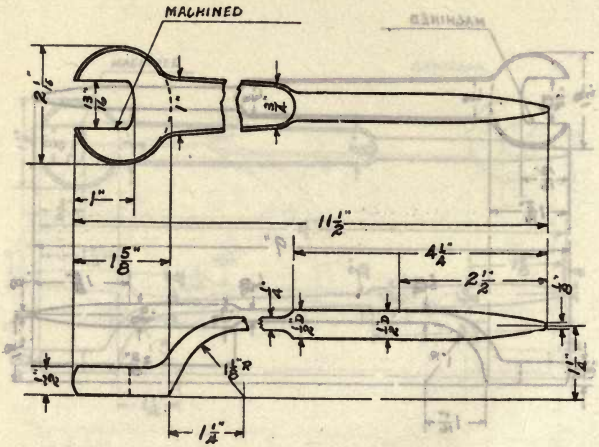

WRENCH, SPUD, 7/16″

NOTE.—Use die No. 1881 when this die is ordered.

Weight (steel), 1.0 lb. **Die number, 1879-N**
Former die number, (9-20)

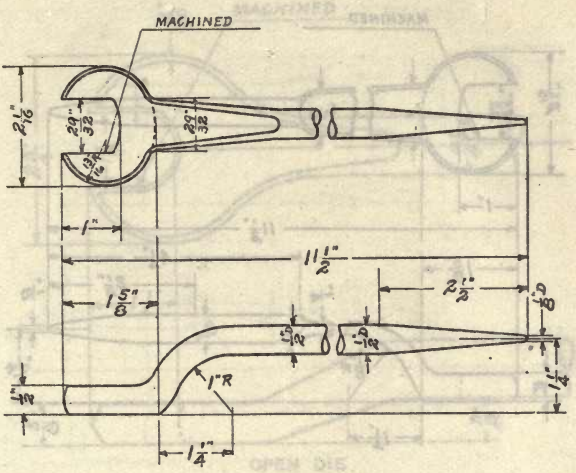

WRENCH, SPUD, 1/2″

Weight, lbs.

Die number, 1880-M
Former die number, (9-31)

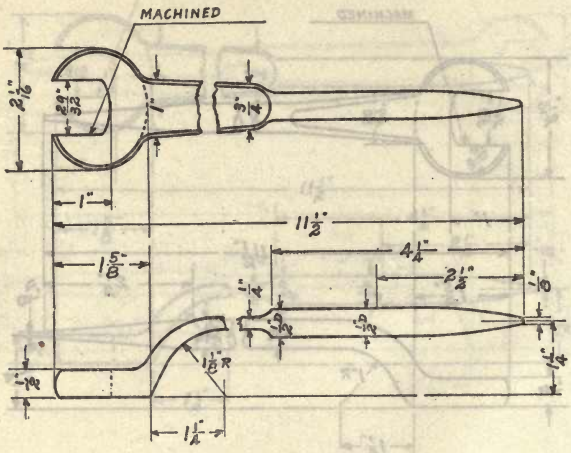

WRENCH, SPUD, 1/2″

Forging used for 7/16″ wrench, die No. 1879

Weight (steel), 1.0 lb. **Die number, 1881-N**
Former die number, (9-21)

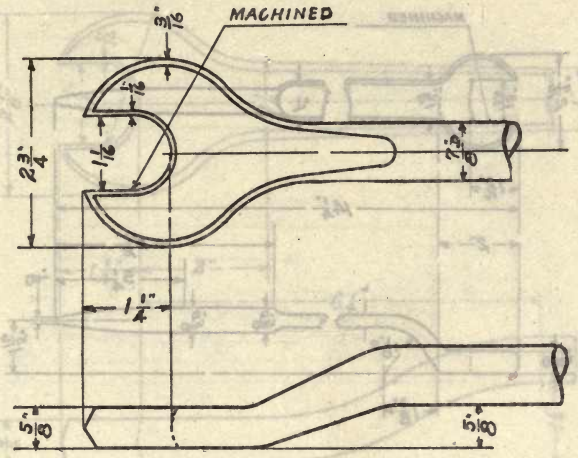

OPEN DIE

WRENCH, SPUD, 5/8″

Weight, **lbs.** **Die number, 1882-B**
Former die number, (46)

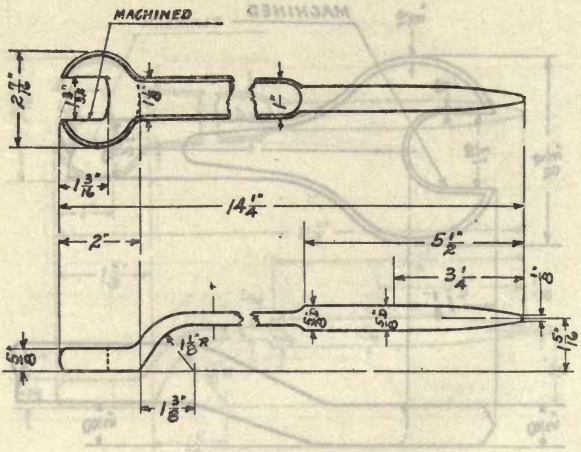

WRENCH, SPUD, 5/8″

Weight (steel), 2.0 lbs. **Die number, 1883-N**
Former die number, (9-22)

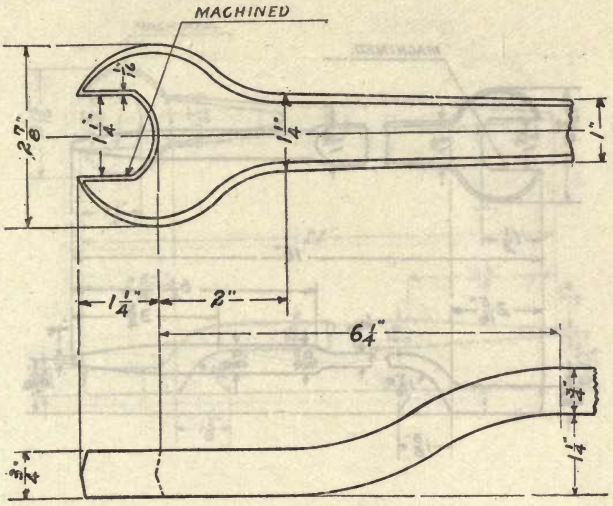

OPEN DIE

WRENCH, SPUD, 3/4″

Weight (steel), **lbs.** **Die number, 1884-B**
Former die number, (11)

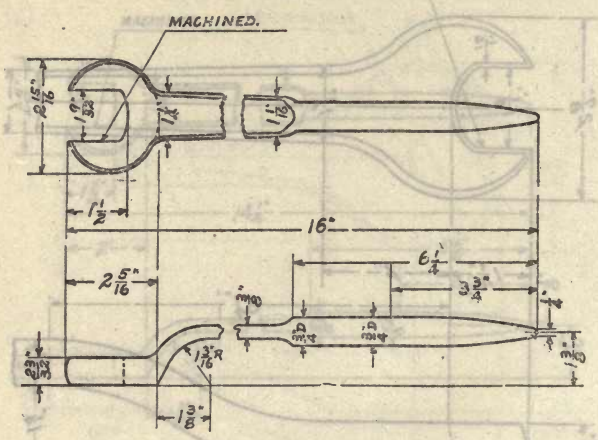

WRENCH, SPUD, 3/4″

Weight (steel), 3.5 lbs. **Die number, 1885-N**
Former die number, (9-23)

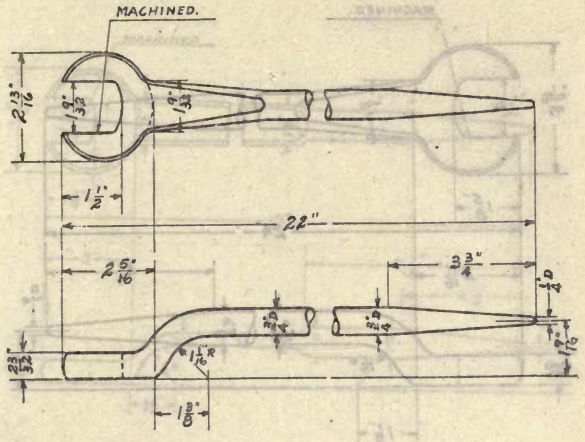

WRENCH, SPUD, 3/4″

Weight, lbs. **Die number, 1886-M**
Former die number, (9-33)

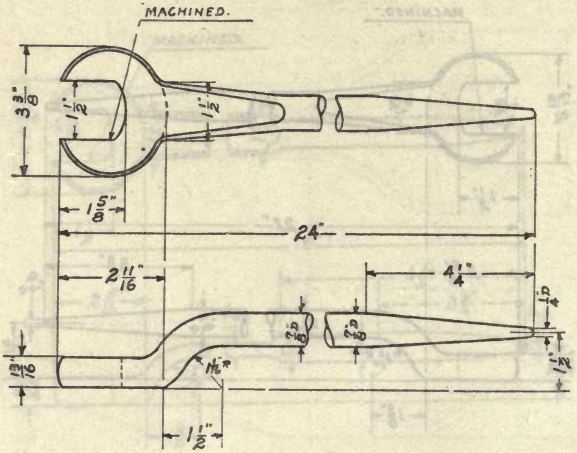

WRENCH, SPUD, 7/8″

Weight, lbs.

Die number, 1887-M
Former die number, (9-34)

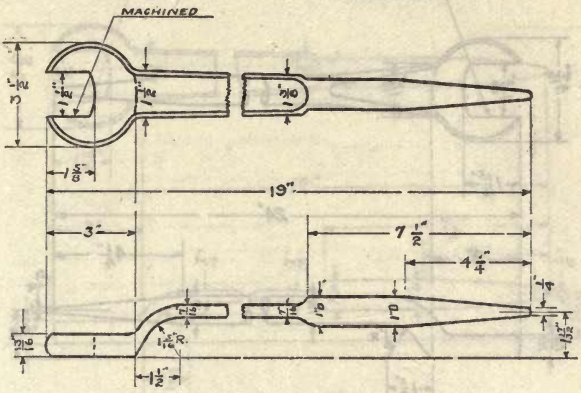

WRENCH, SPUD, 7/8″

NOTE.—Use die No. 1891 when this die is ordered

Weight (steel), 6.5 lbs. **Die number, 1888-N**
Former die number, (9-24)

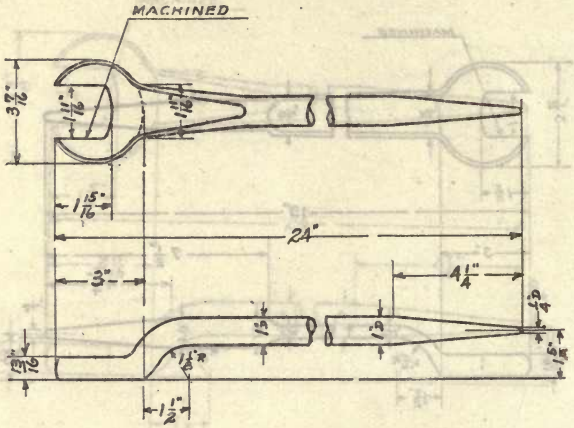

WRENCH, SPUD, 1″

Weight, **lbs.** **Die number, 1889-M**
Former die number, (9-35)

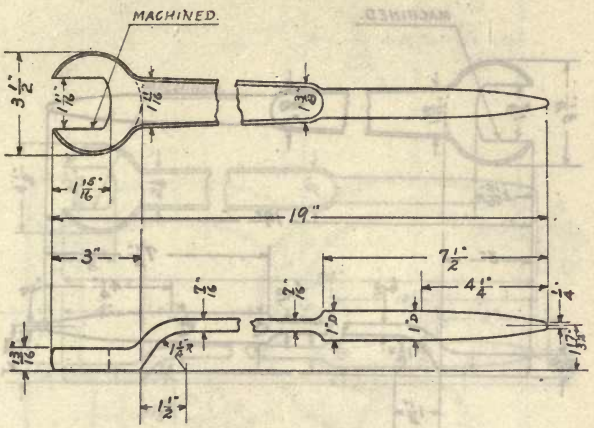

WRENCH, SPUD, 1″

NOTE.—Use die No. 1891 when this die is ordered.

Weight (steel), 6.5 lbs. **Die number, 1890-N**
Former die number, (9-25)

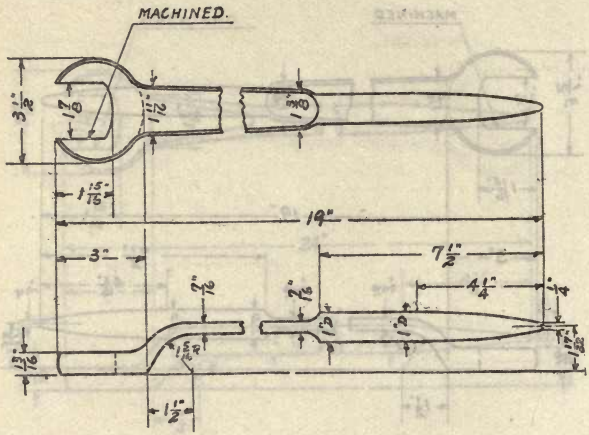

WRENCH, SPUD, 1 1/8″

Forging used for 7/8″ and 1″ wrenches, die Nos. 1888 and 1890

Weight (steel), 6.5 lbs. **Die number, 1891-N**
Former die number, (9-26)

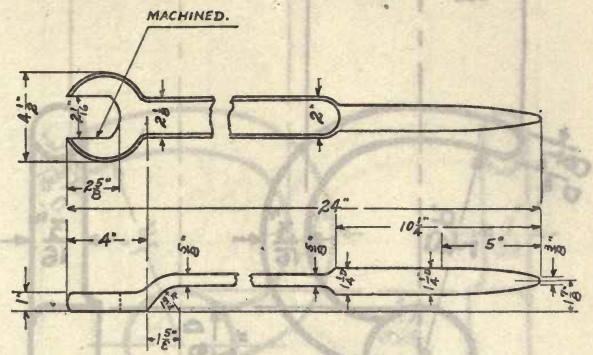

WRENCH, SPUD, 1 1/4″

Weight (steel), 7.25 lbs. **Die number, 1892-N**
Former die number, (9-27)

NOT STANDARD STOCK

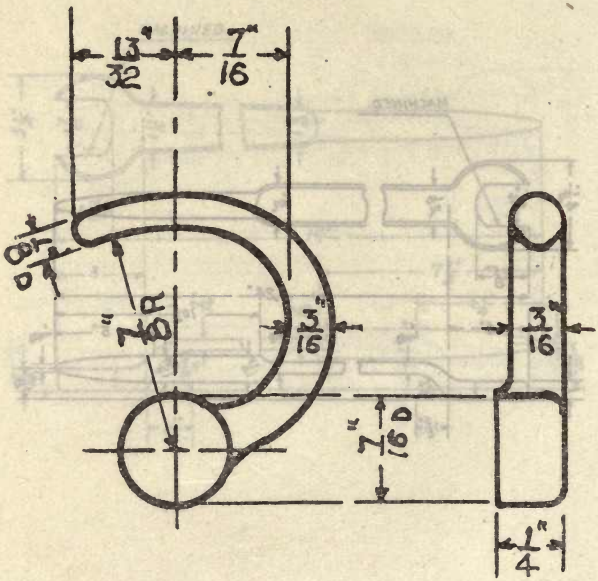

LATCH, BLOCK, SNATCH, 5″

Weight, **lbs.** **Die number, 1893-B**
Former die number, (193)

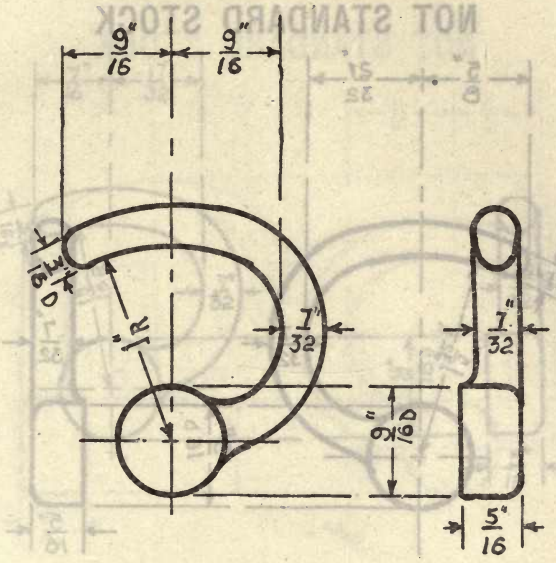

LATCH, BLOCK, SNATCH, 6″

Weight, lbs. **Die number, 1894-B**
Former die number, (58)

NOT STANDARD STOCK

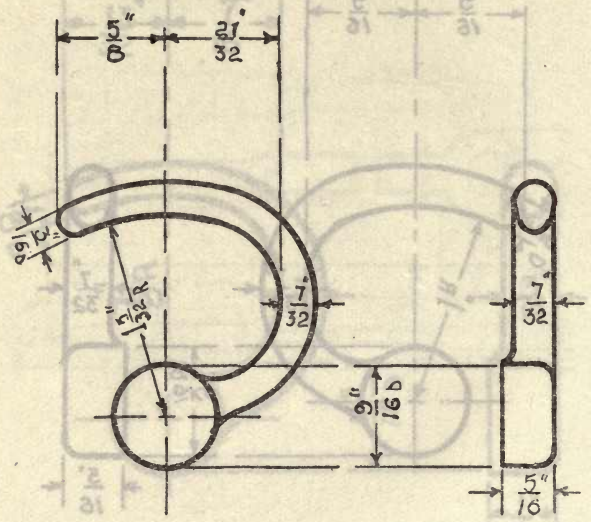

LATCH, BLOCK, SNATCH, 6″, 7″, AND 8″

Weight (steel), 0.06 lb. Die number, 1895-MB
Former die numbers, (5-85) (55)

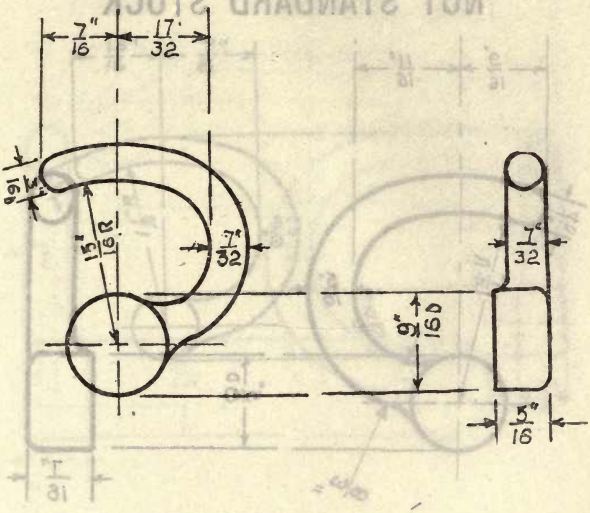

LATCH, BLOCK, SNATCH, 8″

Weight, **lbs.** **Die number, 1896-P**
Former die number, (179)

NOT STANDARD STOCK

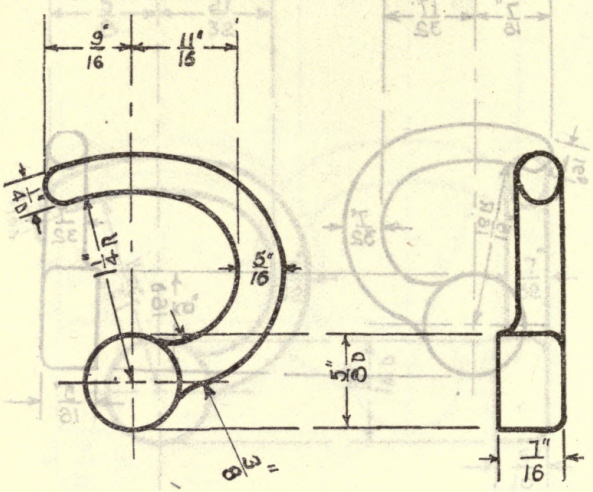

LATCH, BLOCK, SNATCH, 9″

Weight (steel), 0.13 lb. Die number, 1897-BY
Former die numbers, (187) (170)

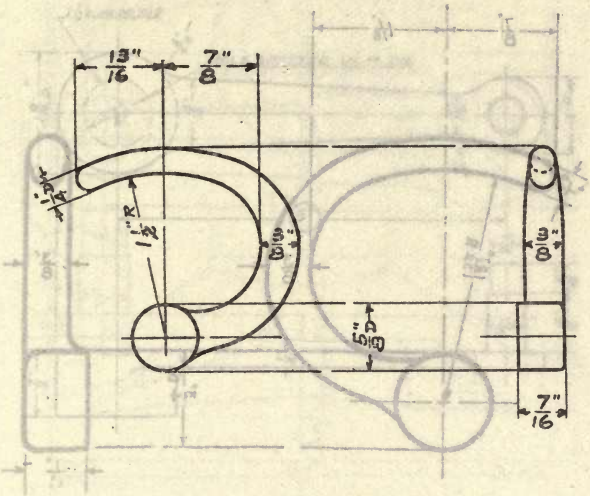

LATCH, BLOCK, SNATCH, 10″

Weight, **lbs.** **Die number, 1898-MBP**
Former die numbers, (5-101) (183) (181)

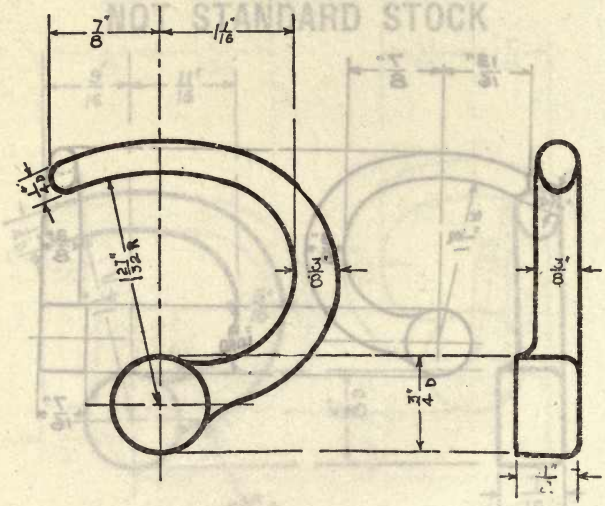

LATCH, BLOCK, SNATCH, 12″

Weight, **lbs.** **Die number, 1899-MB**
Former die numbers, (5-109) (154)

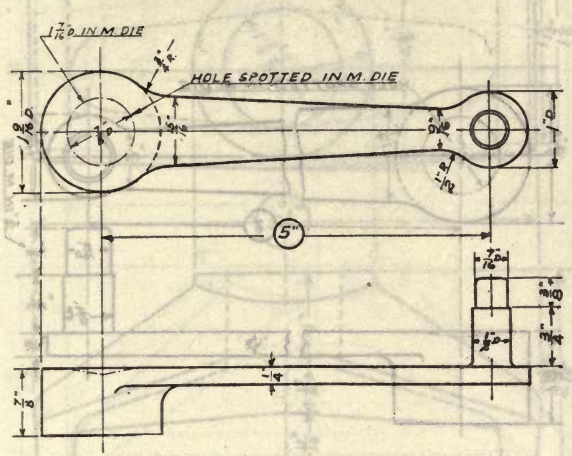

ARM, REVERSING, 5″

For steamer engines, types "K" and "L"

Weight, lbs. Die number, 1900-MY
Former die numbers, (7-48) (1103)

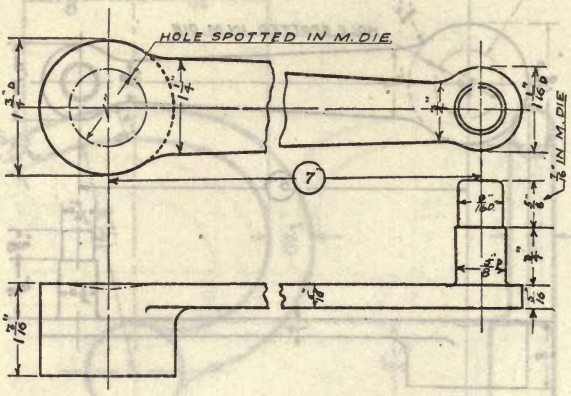

ARM, REVERSING, 7″

For steamer engines, types "M" and "E_3"

Weight, lbs. Die number, 1901-MY
Former die numbers, (7-64) (1005)

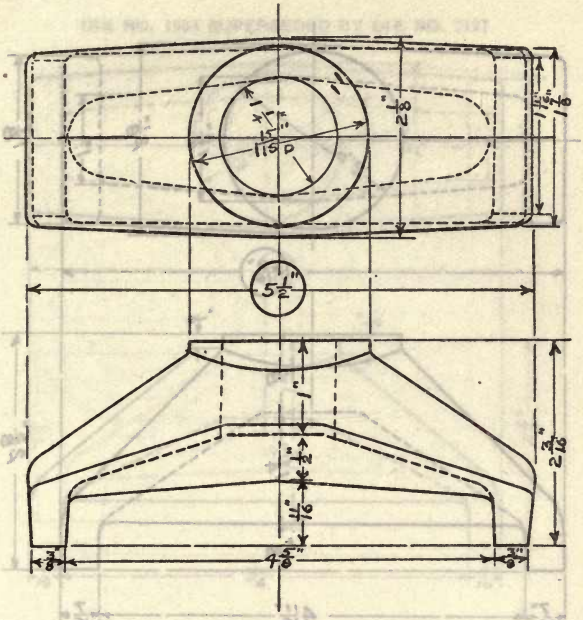

BRIDGE, CLAMPING, 5 1/2″

For oval handhole cover

Weight, **lbs.** **Die number, 1902-M**
Former die number, (12-4)

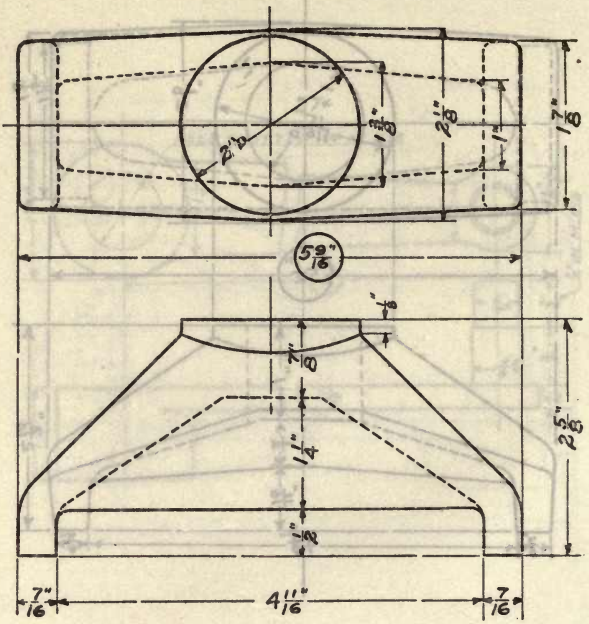

BRIDGE, CLAMPING, 5 9/16″

Weight (steel), 4.25 lbs. **Die number, 1903-N**
Former die number, (3-82)

DIE NO. 1904 SUPERSEDED BY DIE NO. 3127

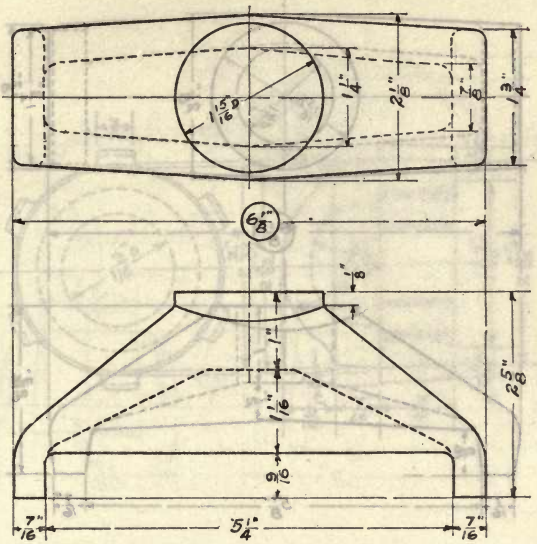

BRIDGE, CLAMPING, 6 1/8″

For rectangular handhole cover

Weight (steel), 2.0 lbs. **Die number, 1904-N**
Former die number, (3-84)

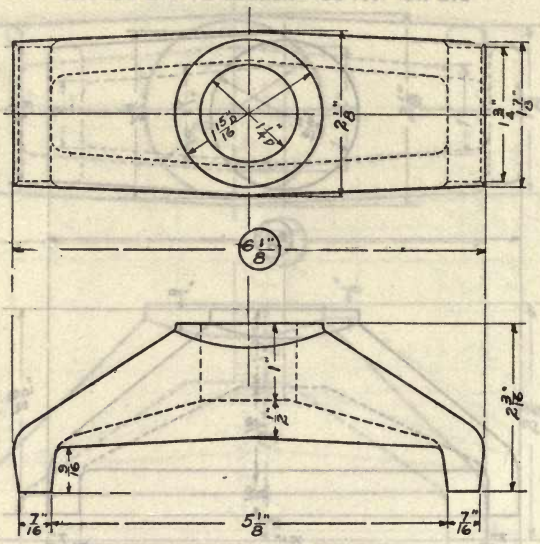

BRIDGE, CLAMPING, 6 1/8″

For rectangular handhole cover

Weight, lbs. **Die number, 1905-M**
Former die number, (12-3)

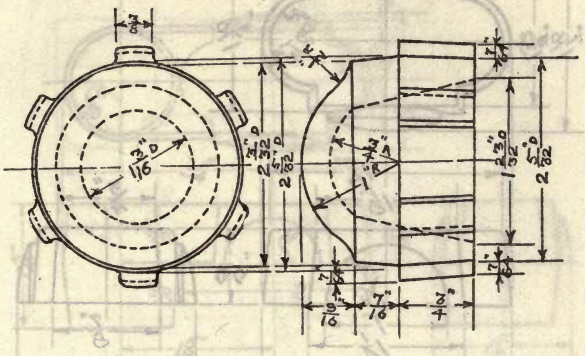

CAP, TUBE, BOILER

Weight, lbs. **Die number, 1906-M**
Former die number, (12-15)

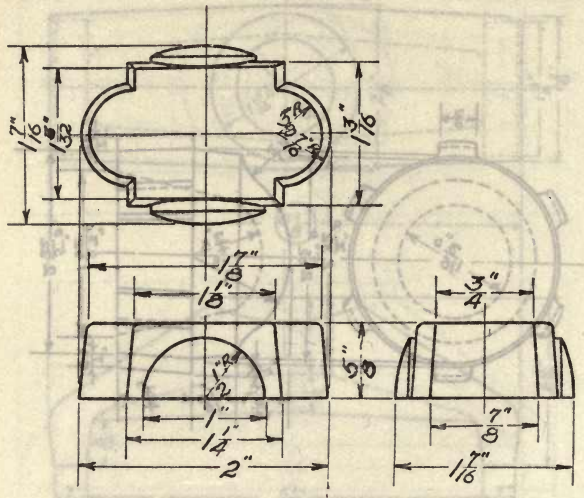

CAP-SQUARE, CROSSHEAD, PUMP

For steam launch feed pump

Weight (steel), 0.56 lb. **Die number, 1907-B**
Former die number, (248)

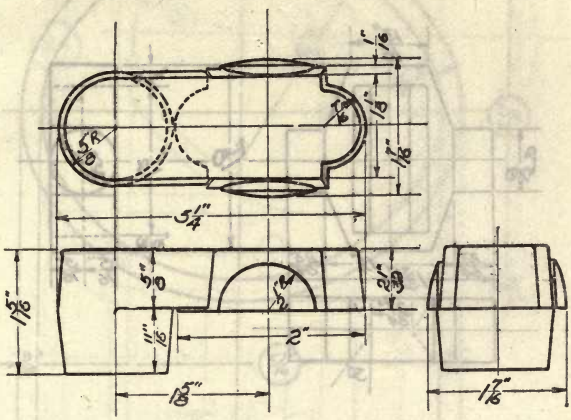

CROSSHEAD, PUMP

For steam launch feed pump

Weight (steel), 1.0 lb.

Die number, 1908-B
Former die number, (250)

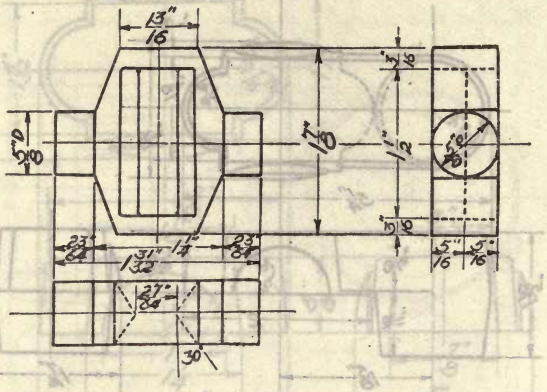

YOKE, PUMP

For steam launch feed pump

Weight (steel), 0.44 lb.

Die number, 1909-B
Former die number, (218)

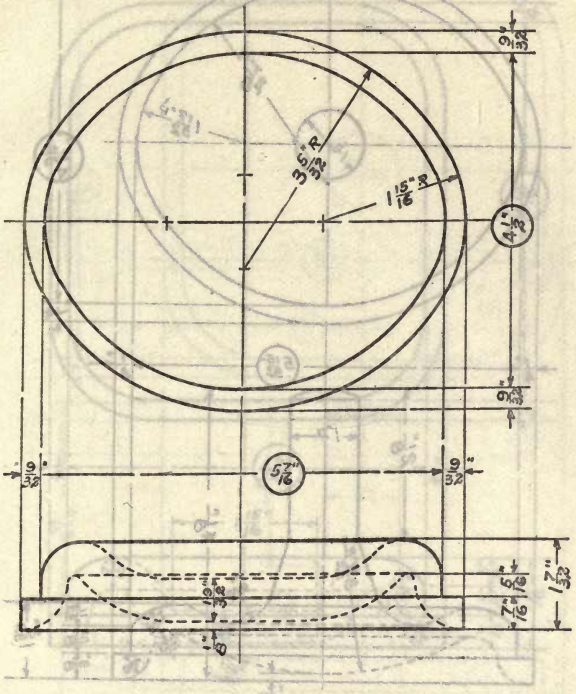

COVER, HANDHOLE, OVAL, 5 7/16″ X 4 1/2″

Weight (steel), 3.5 lbs. **Die number, 1910-N**
Former die number, (3-71)

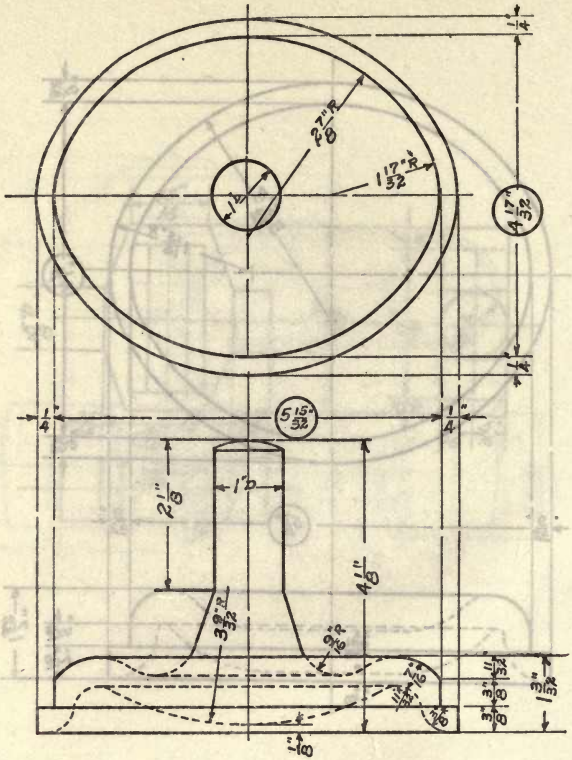

COVER, HANDHOLE, OVAL, WITH SPINDLE, 5 15/32″ X 4 17/32″

Weight, lbs. **Die number, 1911-M**
Former die number, (12-2)

DIE No. 1912 SUPERSEDED BY DIE No. 3128

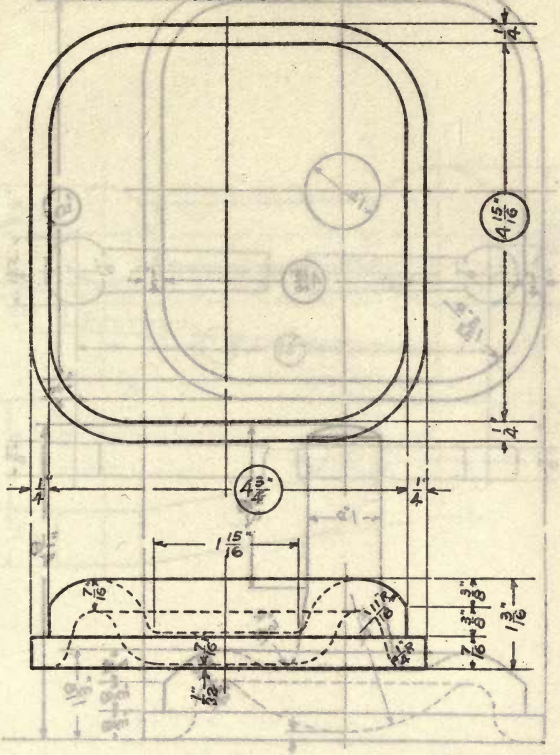

COVER, HANDHOLE, RECTANGULAR, 4 15/16″ X 4 3/4″

Weight (steel), 7.0 lbs. **Die number, 1912-N**
Former die number, (3-83)

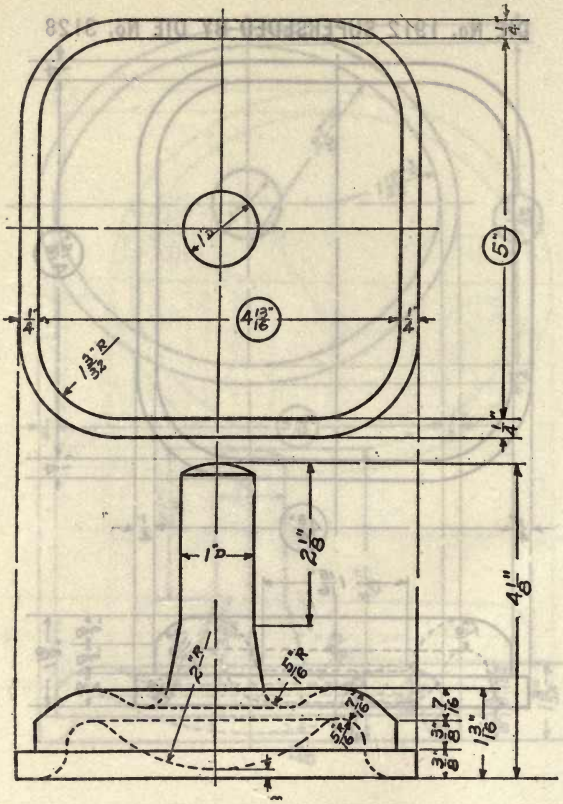

COVER, HANDHOLE, RECTANGULAR, WITH SPINDLE, 5″ X 4 13/16″

Weight, lbs. **Die number, 1913-M**
Former die number, (12-1)

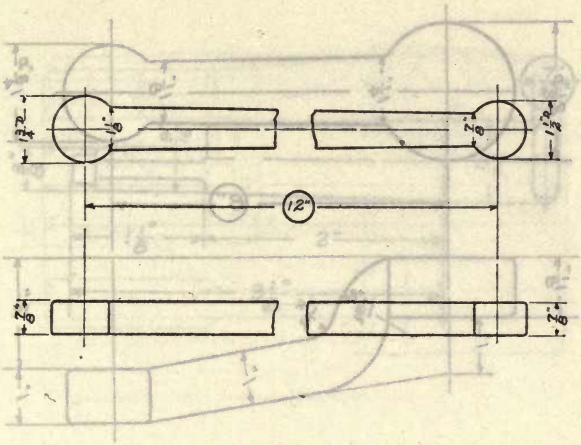

CRANK, HAND, 12″

Weight, lbs. **Die number, 1914-M**
Former die number, (11-2)

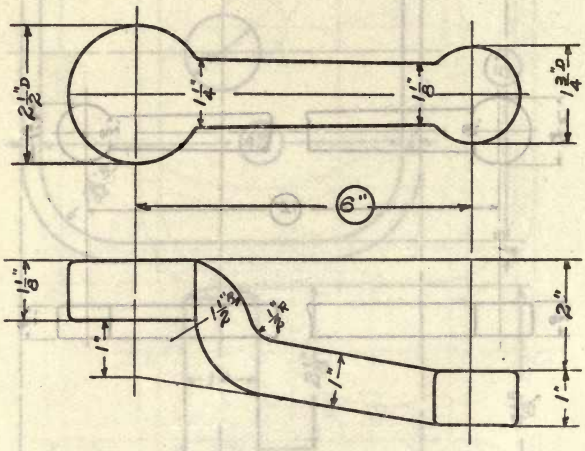

CRANK, HAND, 6″

Weight, lbs. **Die number, 1915-M**
Former die number, (11-1)

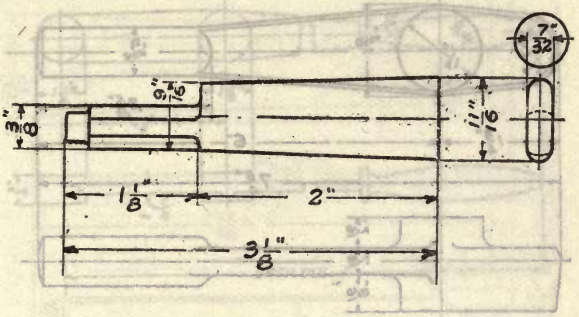

KEY, CROSSHEAD, 7/32″

For steamer engine, type "B$_1$"

Weight (steel), 0.13 lb. **Die number, 1916-Y**
Former die number, (1001)

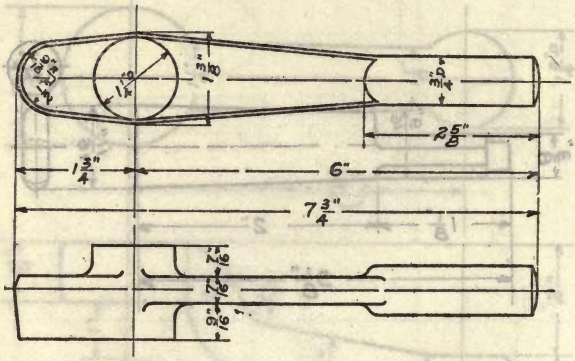

LEVER, 6″

For steam launch feed pump

Weight (steel), 2.0 lbs. Die number, 1917-B
Former die number, (249)

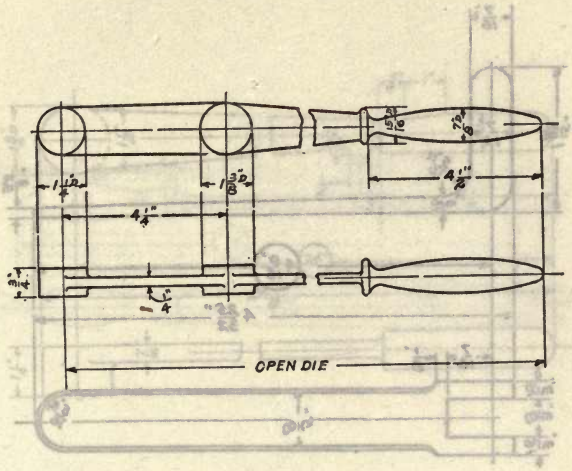

LEVER

For plumber's force pump

Weight, **lbs.** **Die number, 1918-Y**
Former die number, (173)

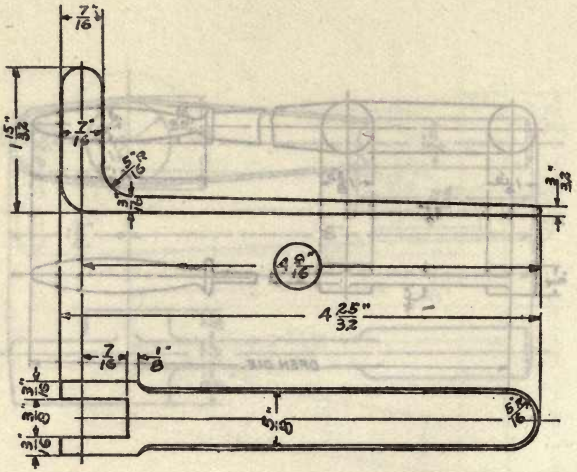

LEVER, LATCH, 4 9/16″

For steamer engines, types "K" and "L"

Weight, ... lbs. **Die number, 1919-Y**
Former die number, (1107)

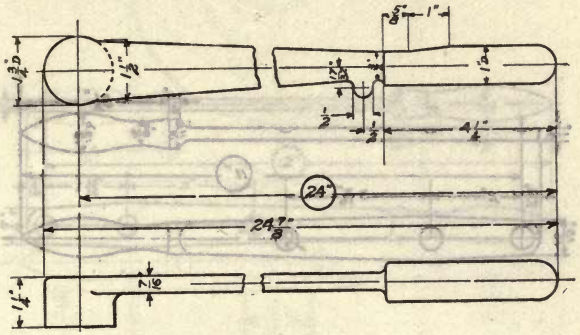

LEVER, REVERSING, 24″

For steamer engines, types "M" and "E$_3$"

Weight, lbs. **Die number, 1920-Y**
Former die number, (1013)

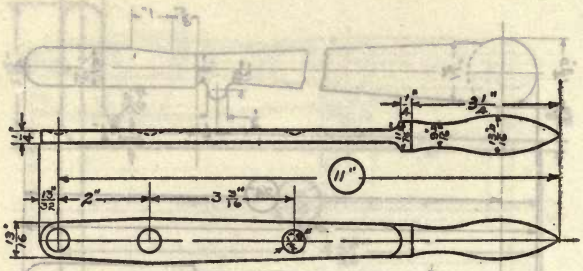

LEVER, THROTTLE, 1″

For steamer engine, type "K"

Weight, lbs. **Die number, 1921-M**
Former die number, (7-1)

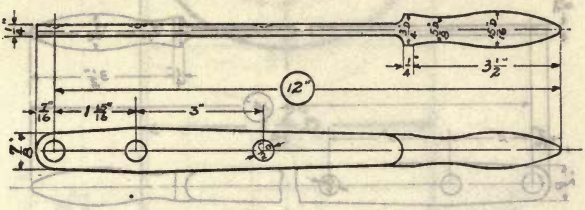

LEVER, THROTTLE, 12″

For steamer engine, type "L"

Weight, lbs. **Die number, 1922-M**
Former die number, (7-21)

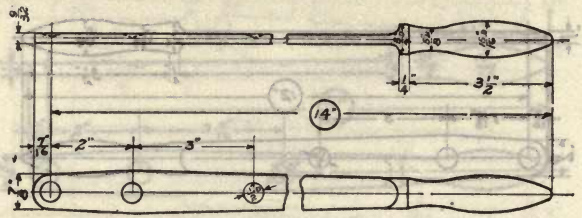

LEVER, THROTTLE, 14″

For steamer engine, type "M"

Weight, lbs. **Die number, 1923-M**
Former die number, (7-57)

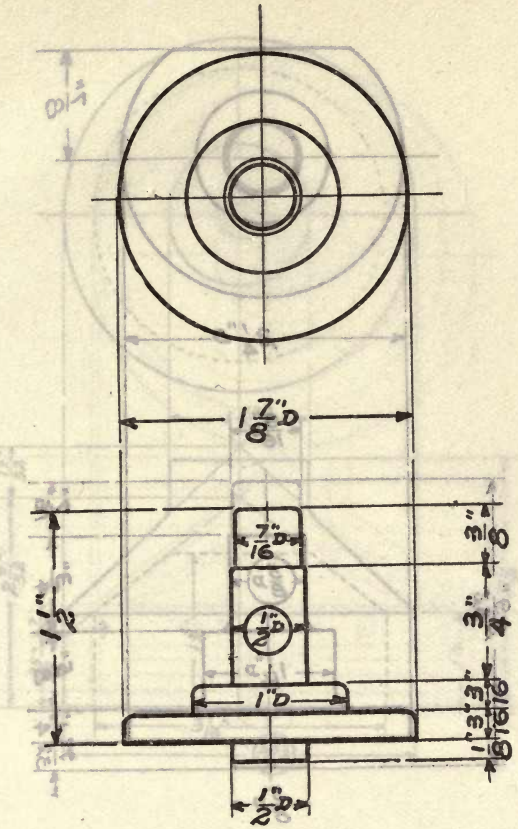

PIN, SADDLE, 1/2″

For steamer engines, types "K" and "L"

Weight, lbs. **Die number, 1924-M**
Former die number, (7-45)

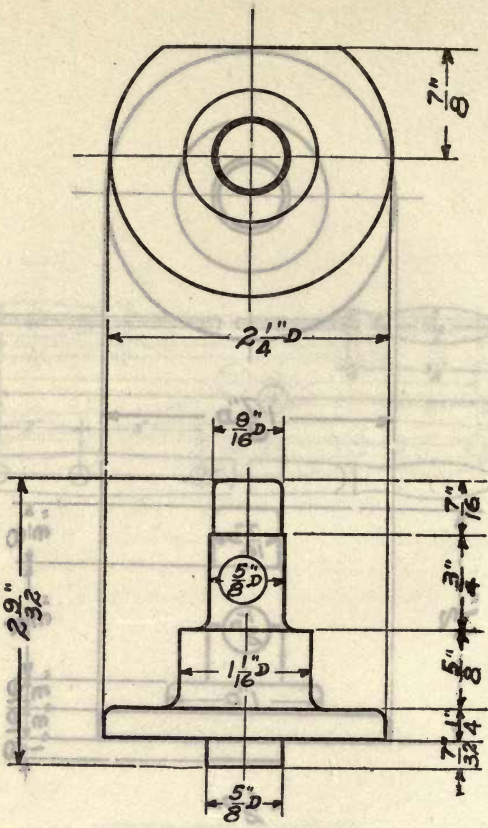

PIN, SADDLE, 5/8″

For steamer engine, type "M"

Weight, lbs. **Die number, 1925-MY**
Former die numbers, (7-66) (1010)

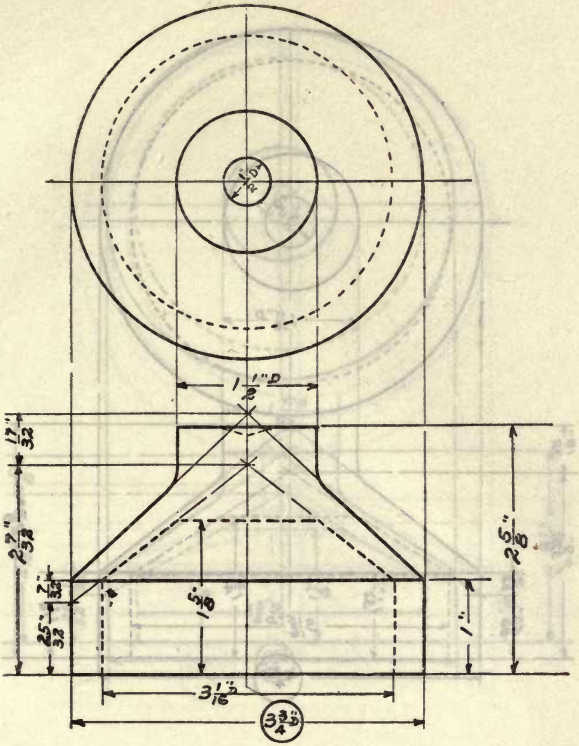

PISTON, H. P., 3 3/4″

For steamer engine, type "K"

Weight, **lbs.** **Die number, 1926-M**
Former die number, (7-5)

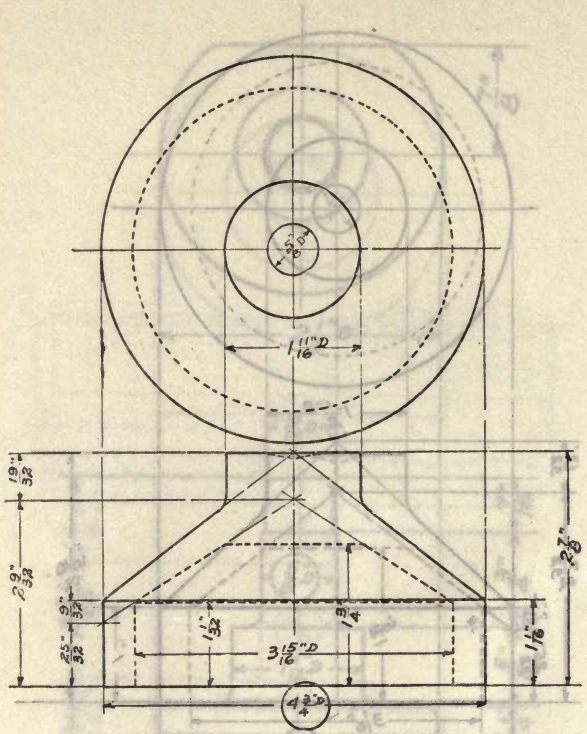

PISTON, H. P., 4 3/4″

For steamer engine, type "L"

Weight, lbs. **Die number, 1927-M**
Former die number, (7-25)

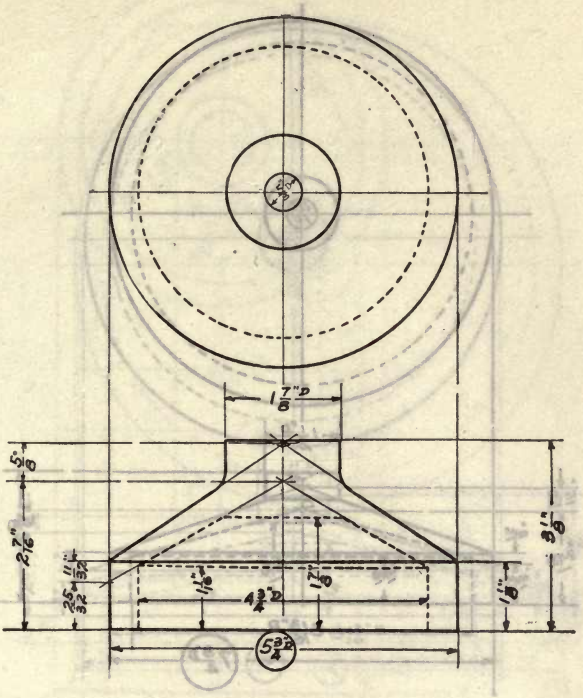

PISTON, H. P., 5 3/4″

For steamer engine, type "M"

Weight, lbs. **Die number, 1928-M**
Former die number, (7-61)

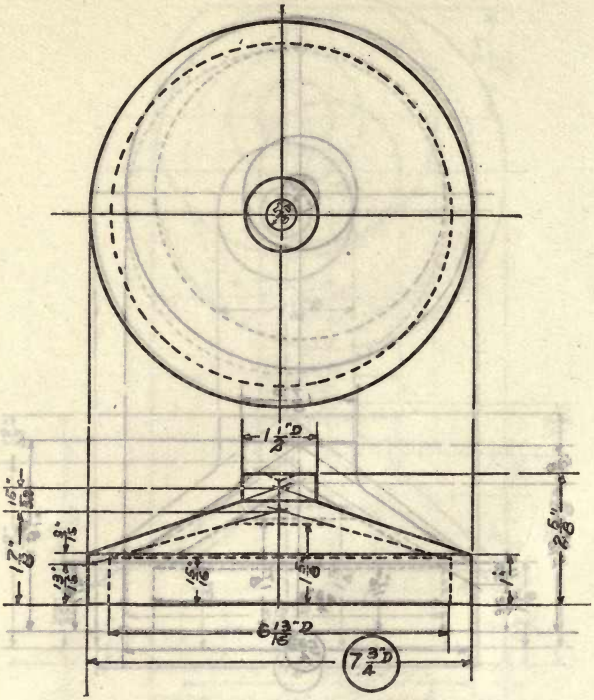

PISTON, L. P., 7 3/4"

For steamer engine, type "K"

Weight, lbs. **Die number, 1929-M**
Former die number, (7-6)

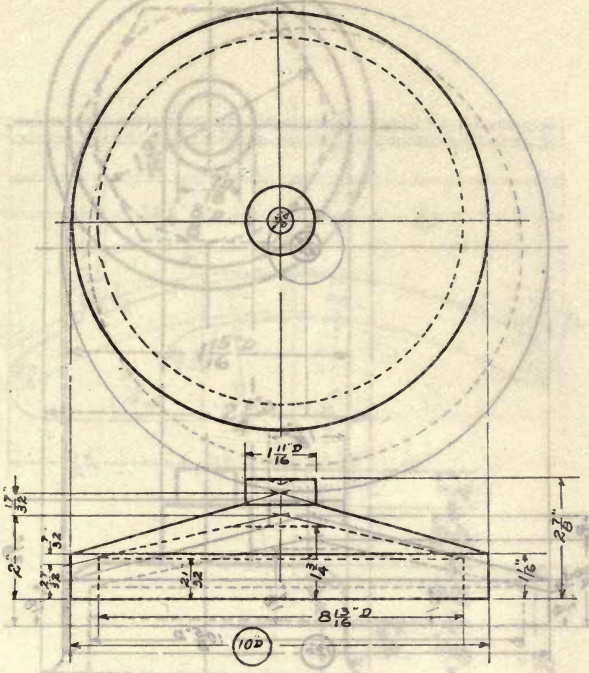

PISTON, L. P., 10″

For steamer engine, type "L"

Weight, lbs. **Die number, 1930-M**
Former die number ,(7-26)

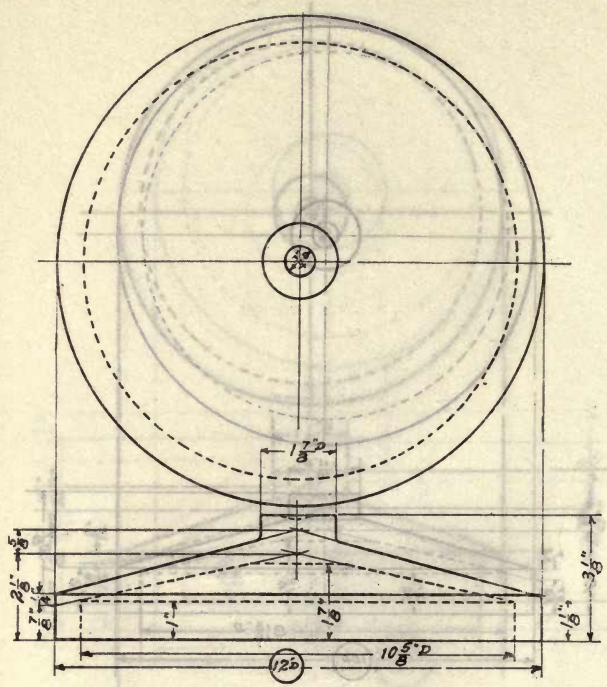

PISTON, L. P., 12″

For steamer engine, type "M"

Weight, lbs. **Die number, 1931-M**
Former die number, (7-62)

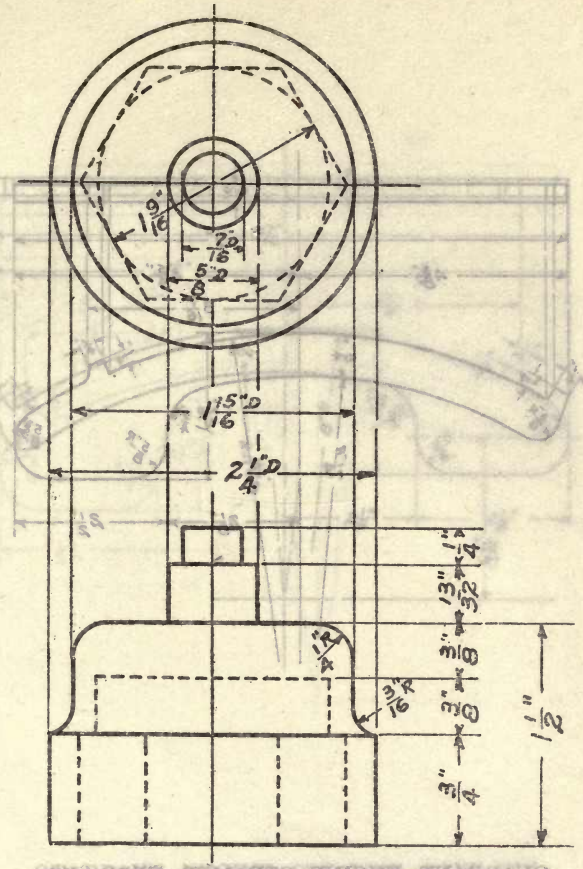

PLUG, TUBE, CIRCULATING, BOILER

Weight (steel), 2.0 lbs. **Die number, 1932-N**
Former die number, (3-85)

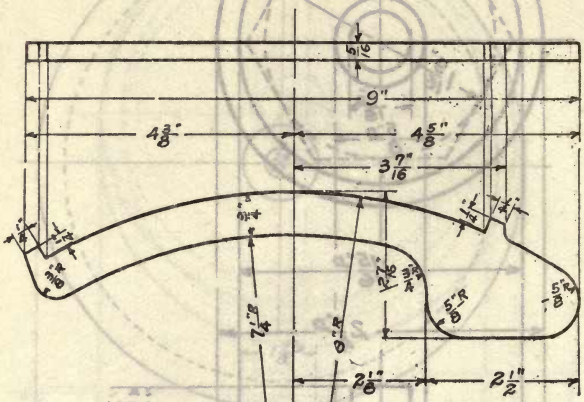
5/16
9"
4 3/8"
4 5/8"
3 7/16"
1/4
1/4
1/4

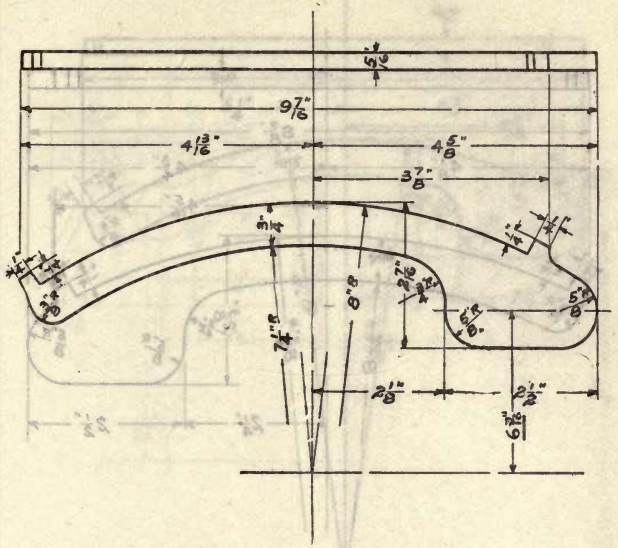

QUADRANT, ENGINE, STEAMER, TYPE "K"

Weight, **lbs.** **Die number, 1934-Y**
Former die number, (1099)

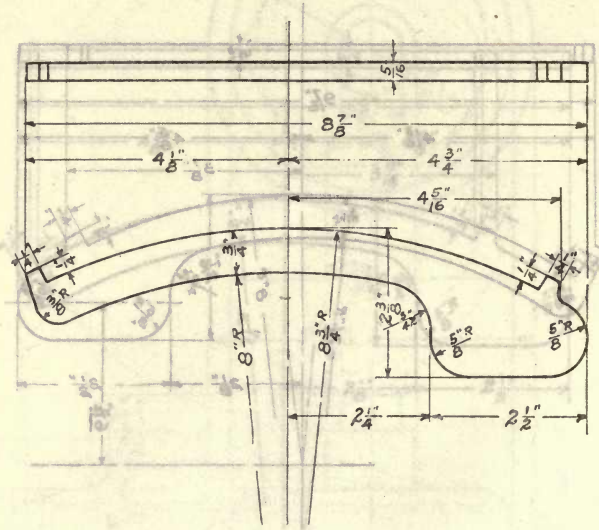

QUADRANT, ENGINE, STEAMER, TYPE "L"

Weight, **lbs.** **Die number, 1935-M**
Former die number, (7-29)

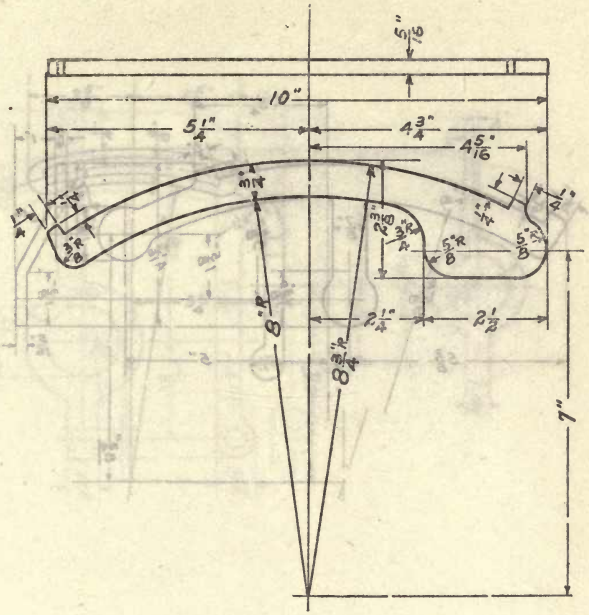

QUADRANT, ENGINE, STEAMER, TYPE "L"

Weight, **lbs.** **Die number, 1936-Y**
Former die number, (1098)

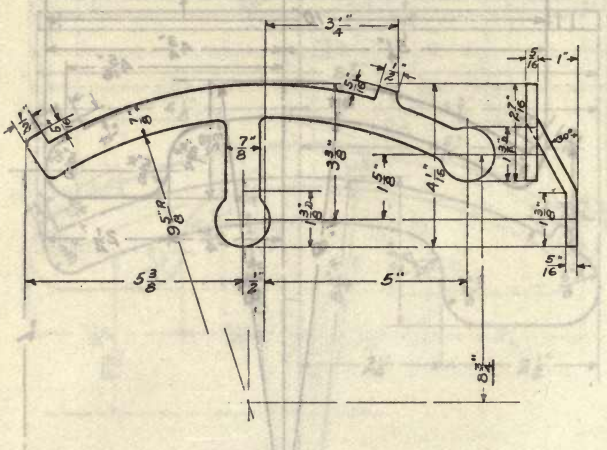

QUADRANT, ENGINE, STEAMER, TYPE "M"

Weight, lbs. **Die number, 1937-YM**
Former die numbers, (1114) (7-72)

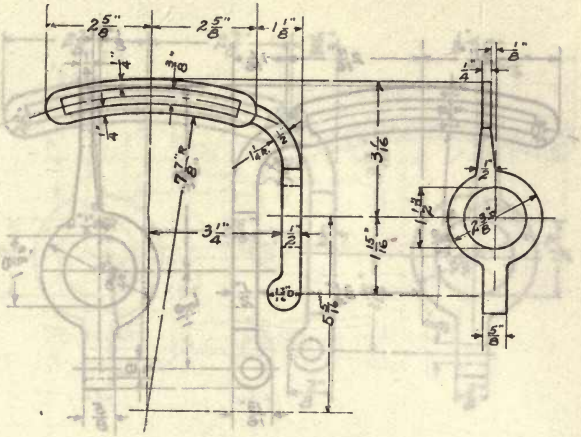

QUADRANT, THROTTLE, ENGINE, STEAMER, TYPE "B_3"

Weight, lbs. **Die number, 1938-Y**
Former die number, (1007)

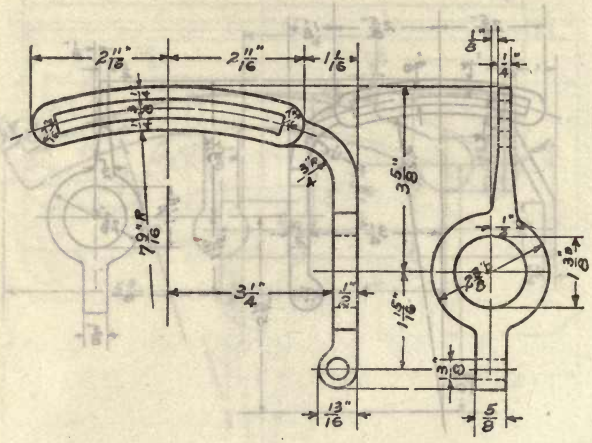

QUADRANT, THROTTLE, ENGINE, STEAMER, TYPE "K"

Weight, lbs. Die number, 1939-M
Former die number, (7-3)

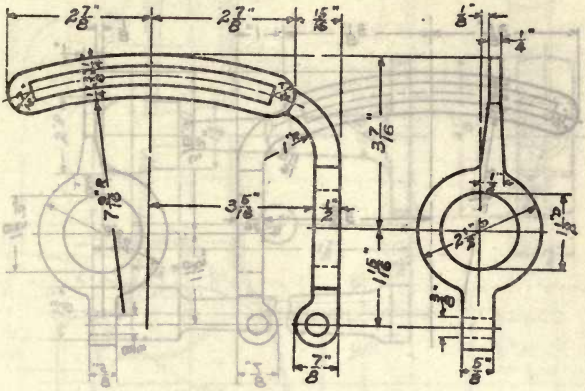

QUADRANT, THROTTLE, ENGINE, STEAMER, TYPE "L"

Weight, lbs. **Die number, 1940-M**
Former die number, (7-23)

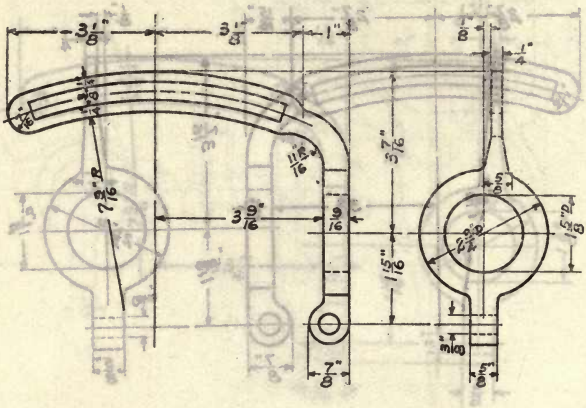

QUADRANT, THROTTLE, ENGINE, STEAMER, TYPE "M"

Weight, lbs. Die number, 1941-MY
Former die numbers, (7-59) (1109)

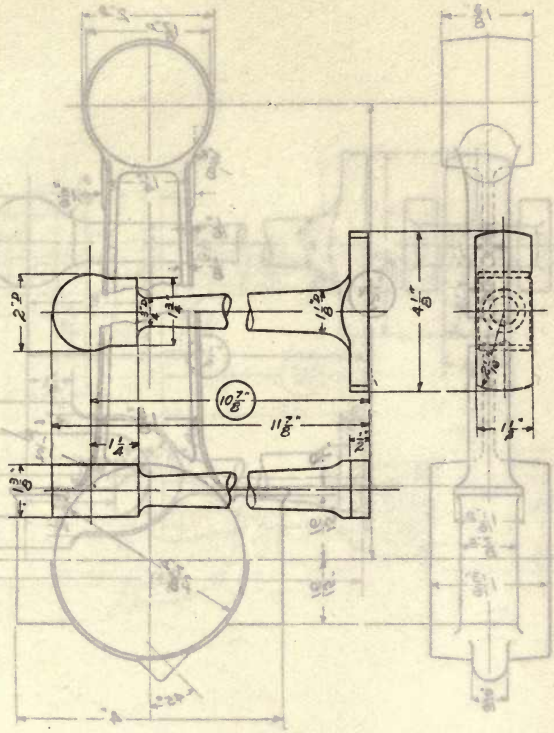

ROD, CONNECTING, 10 7/8″

For gasoline engine, type "AA"

Weight, lbs. **Die number, 1942-N**
Former die number, (3-89)

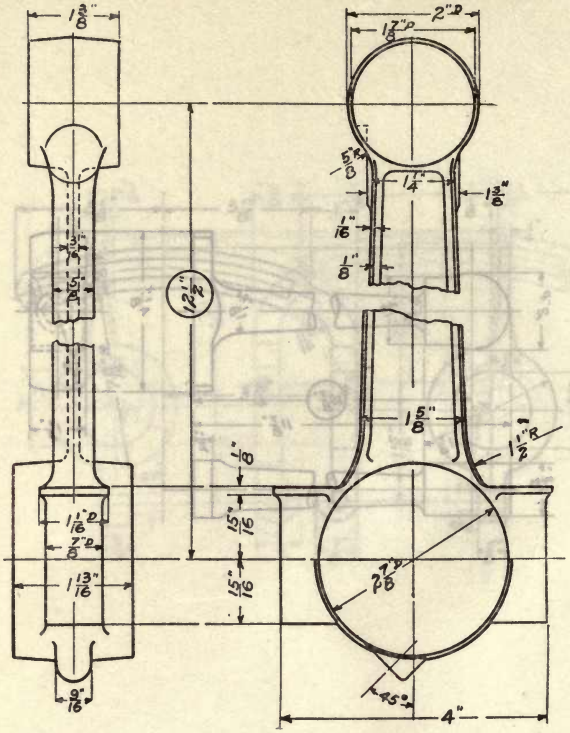

ROD, CONNECTING, 12 1/2″

For gasoline engines, types "GG," "HH," and "KK"

Weight, lbs. **Die number, 1943-N**
Former die number, (3-106)

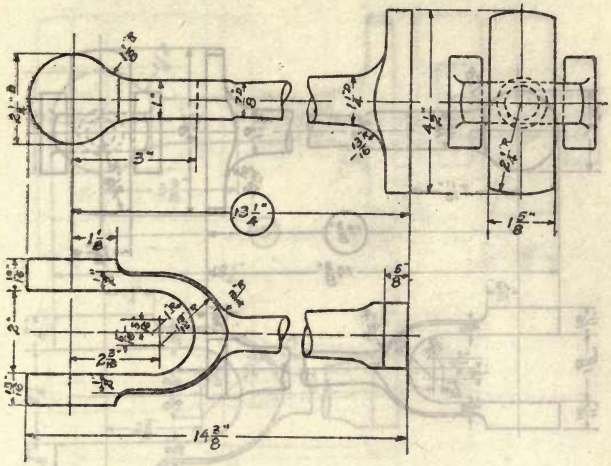

ROD, CONNECTING, 13 1/4″

For steamer engine, type "L"

Weight, ____ lbs. **Die number, 1944-M**
Former die number, (7-28)

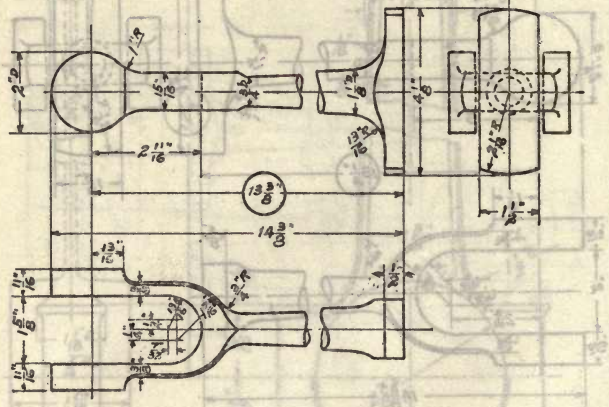

ROD, CONNECTING, 13 3/8″

For steamer engine, type "K"

Weight, lbs. **Die number, 1945-M**
Former die number, (7-8)

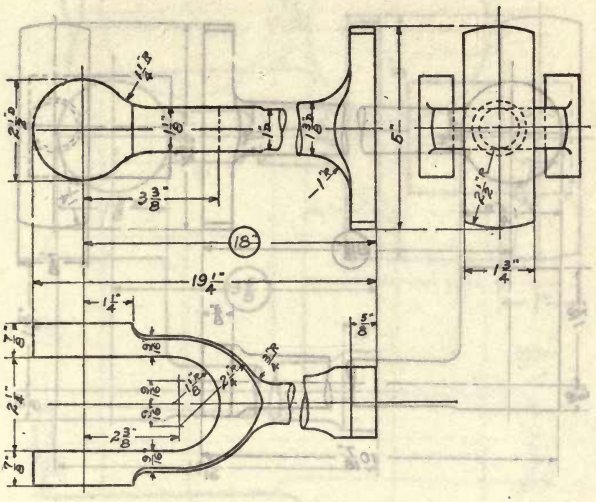

ROD, CONNECTING, 18″

For steamer engine, type "M"

Weight, lbs. **Die number, 1946-M**
Former die number, (7-68)

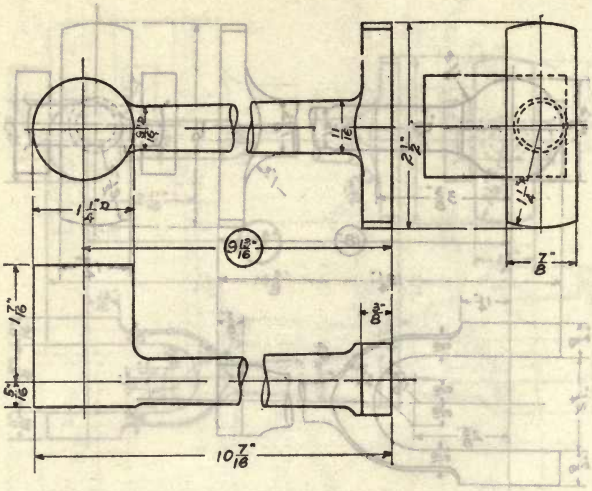

ROD, ECCENTRIC, 9 13/16″

For steamer engines, types "K" and "L"

Weight, ____ lbs. Die number, 1947-MX
Former die numbers, (7-43) (1104)

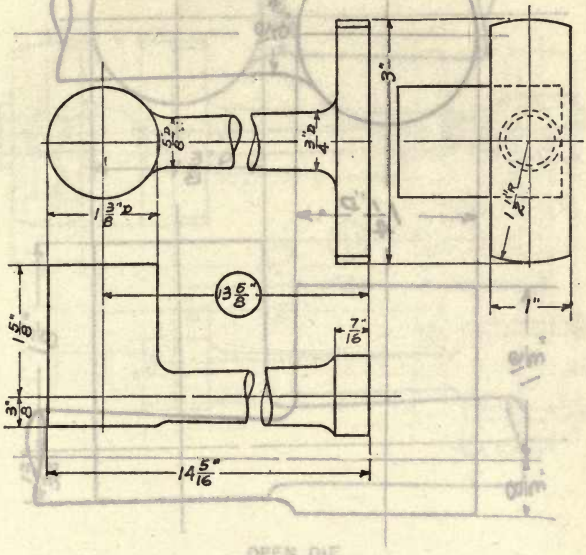

ROD, ECCENTRIC, 13 5/8″

For steamer engines, types "M" and "E$_3$"

Weight, lbs. **Die number, 1948-M**
Former die number, (7-63)

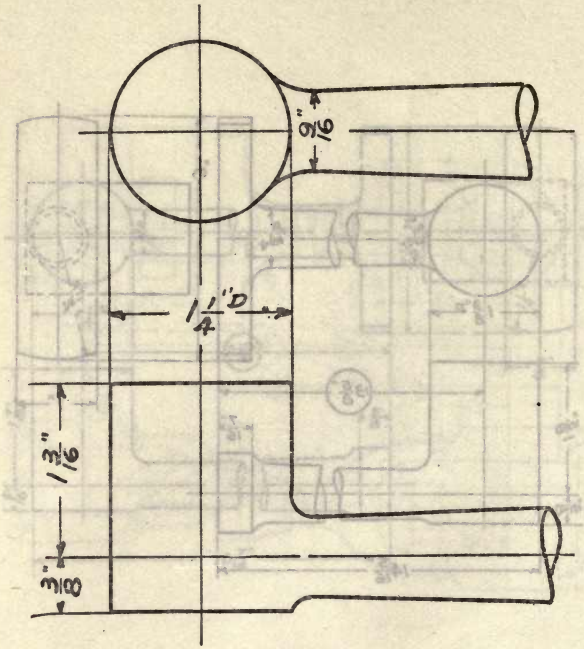

OPEN DIE

ROD, ECCENTRIC; HEAD

For steamer engines, types "B_3" and "G_2"

Weight, lbs. Die number, 1949-Y
Former die number, (1003)

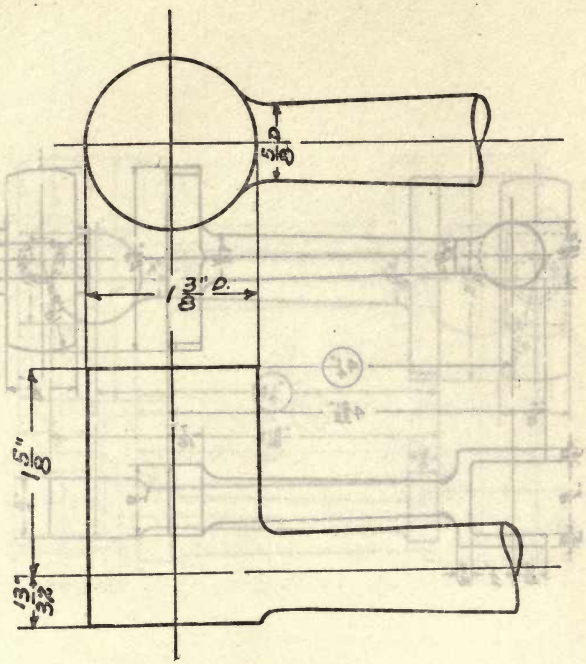

OPEN DIE

ROD, ECCENTRIC; HEAD

For steamer engines, types "E_3" and "M"

(Dimensions given for larger of two types)

Weight, lbs. **Die number, 1950-Y**
Former die number, (1006)

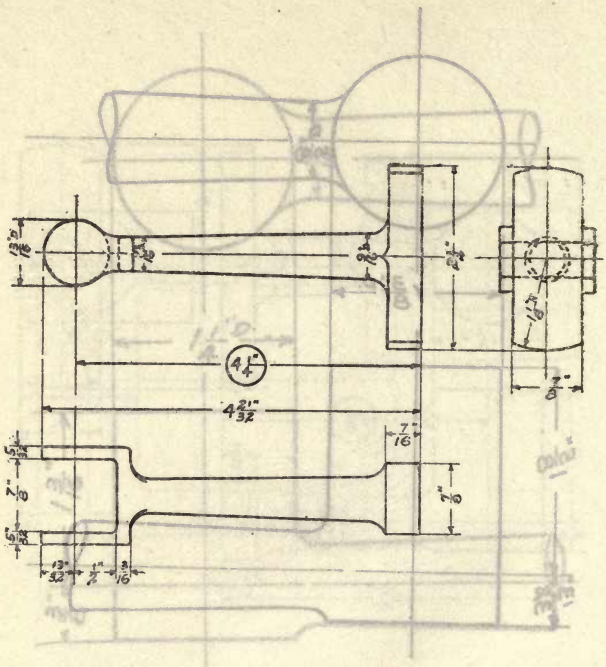

ROD, ECCENTRIC, PUMP, AIR, 4 1/4″

For steamer engines, types "E_2" and "E_3"

Weight, **lbs.** **Die number, 1951-Y**
Former die number, (1015)

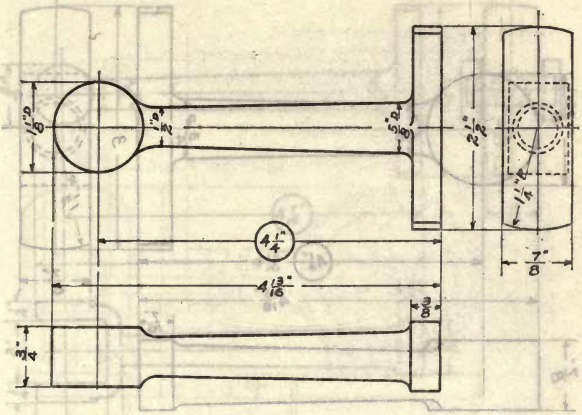

ROD, ECCENTRIC, PUMP, AIR, 4 1/4"

For steamer engines, types "K" and "L"

Weight, lbs. Die number, 1952-M
Former die number, (7-46)

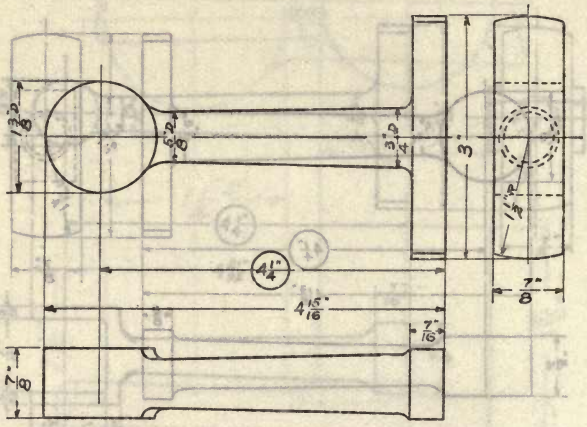

ROD, ECCENTRIC, PUMP, AIR, 4 1/4″

For steamer engine, type "M"

Weight, lbs. **Die number, 1953-MY**
Former die numbers, (7-71) (1011)

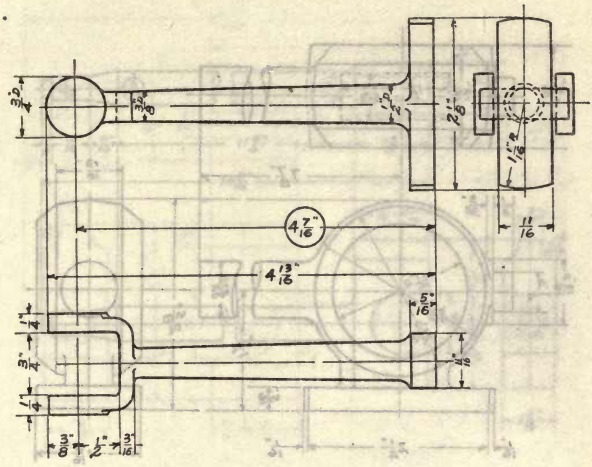

ROD, ECCENTRIC, PUMP, AIR, 4 7/16″

For steamer engines, types "B_3" and "G_2"

Weight, lbs. **Die number, 1954-Y**
Former die number, (1002)

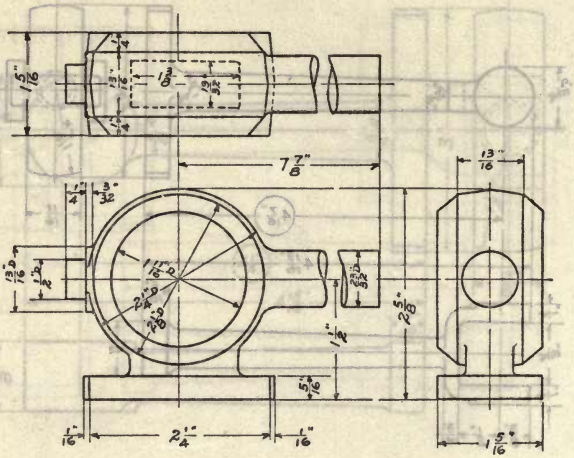

ROD, PISTON, 23/32″ D., WITH CROSSHEAD

Weight (steel), 2.19 lbs. **Die number, 1955-Y**
Former die number, (1115)

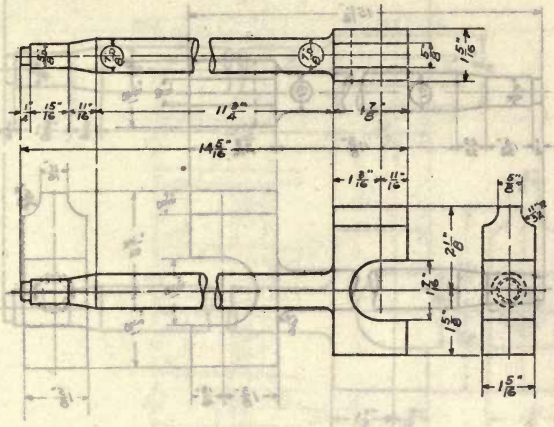

ROD, PISTON, 7/8″ D.

For steamer engine, type "K"

Weight, lbs. **Die number, 1956-M**
Former die number, (7-7)

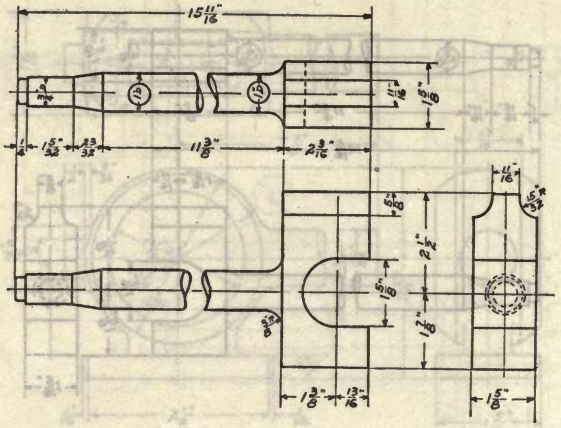

ROD, PISTON, 1″ D.

For steamer engine, type "L"

Weight, lbs.

Die number, 1957-M
Former die number, (7-27)

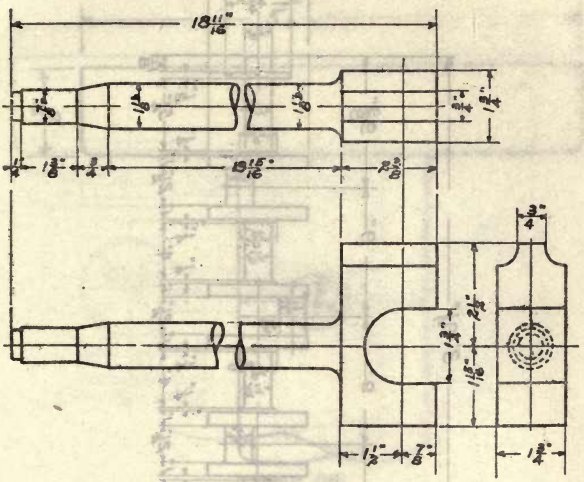

ROD, PISTON, 1 1/8″ D.

For steamer engine, type "M"

Weight, **lbs.** **Die number, 1958-M**
Former die number, (7-67)

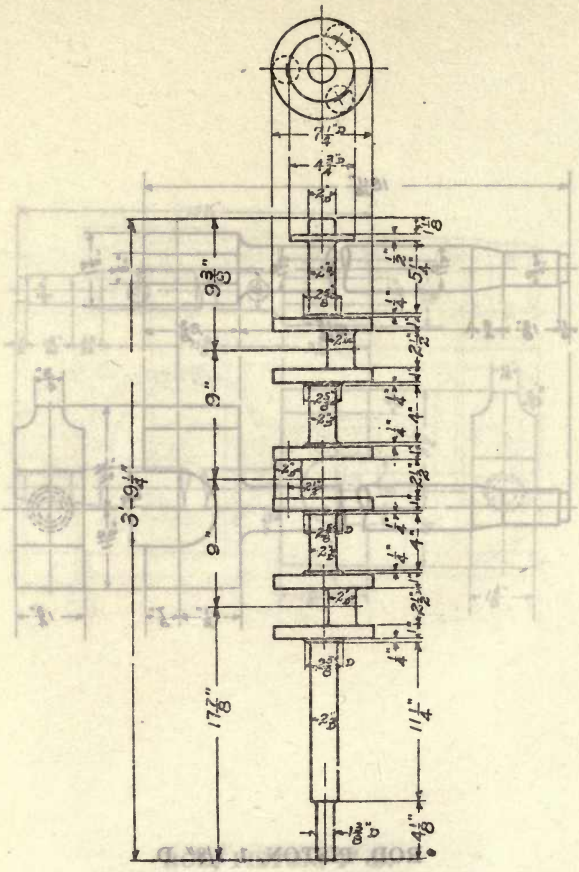

SHAFT, CRANK

For gasoline engines, types "AA," "BB," "CC," and "DD"

Weight, lbs. Die number, 1959-N
Former die number, (3-91)

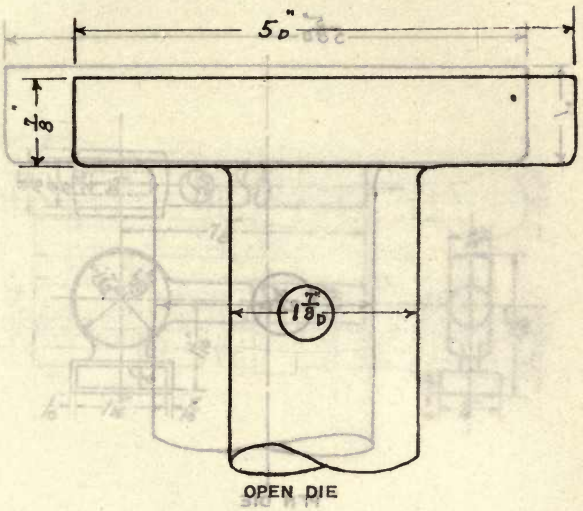

OPEN DIE

SHAFT, PROPELLER, 1 7/8″

For 33-foot steamer

Weight, lbs. **Die number, 1960-N**
Former die number, (3-68)

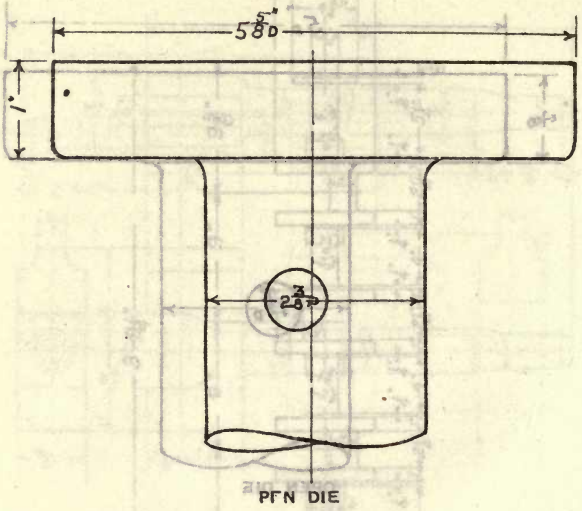

SHAFT, PROPELLER, 2 3/8″

For 40-foot steamer

Weight, lbs. **Die number, 1961-N**
Former die number, (3-69)

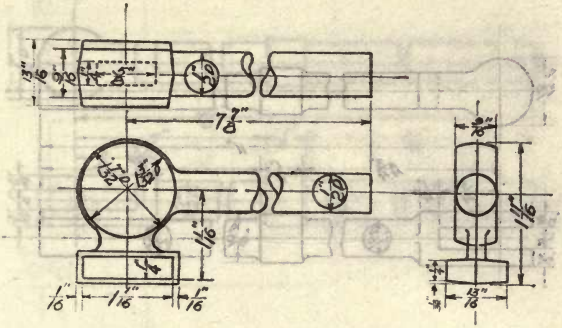

STEM, VALVE, WITH CROSSHEAD, 1/2″ D.

Weight (steel), 0.69 lb. **Die number, 1962-Y**
Former die number, (1121)

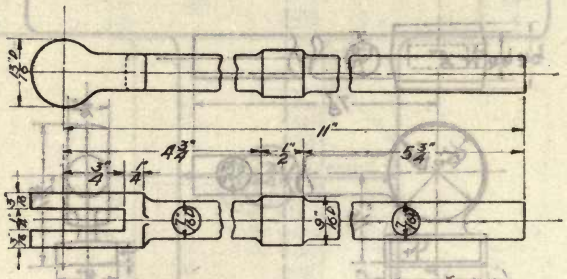

STEM, VALVE, THROTTLE, 7/16″ D.

For steamer engine, type "K"

Weight, lbs. **Die number, 1963-M**
Former die number, (7-2)

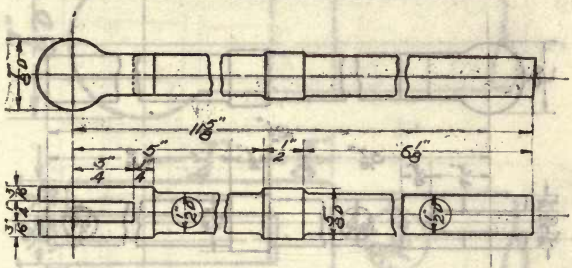

STEM, VALVE, THROTTLE, 1/2″ D.

For steamer engine, type "L"

Weight, lbs. **Die number, 1964-M**
Former die number, (7-22)

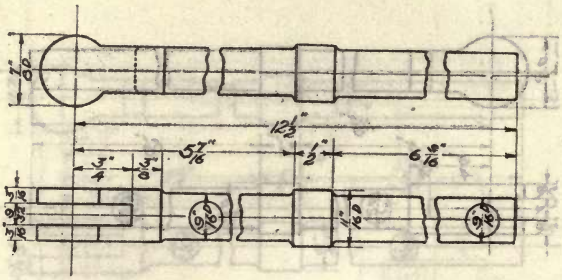

STEM, VALVE, THROTTLE, 9/16″ D.

For steamer engine, type "M"

Weight, **lbs.** **Die number, 1965-M**
Former die number, (7-58)

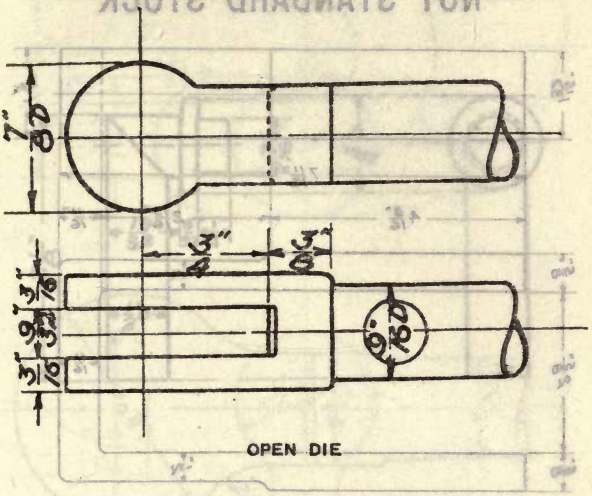

STEM, VALVE, THROTTLE, 9/16 D.; JAW END

For steamer engine, type "E_3"

Weight, lbs. **Die number, 1966-X**
Former die number, (1612)

NOT STANDARD STOCK

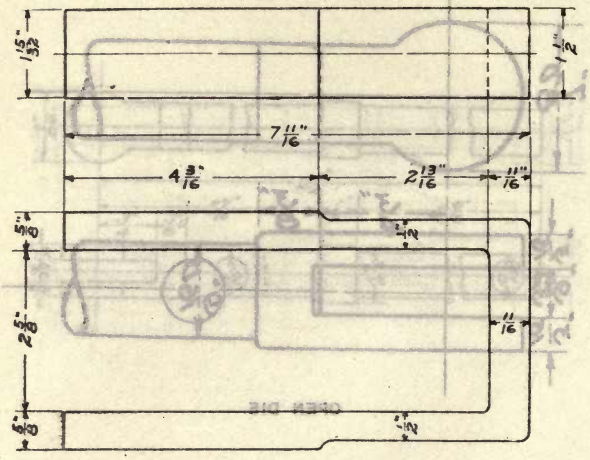

STRAP, CRANK, END

For deck winch

Weight (steel), 3.0 lbs. **Die number, 1967-N**
Former die number, (3-86)

NOT STANDARD STOCK

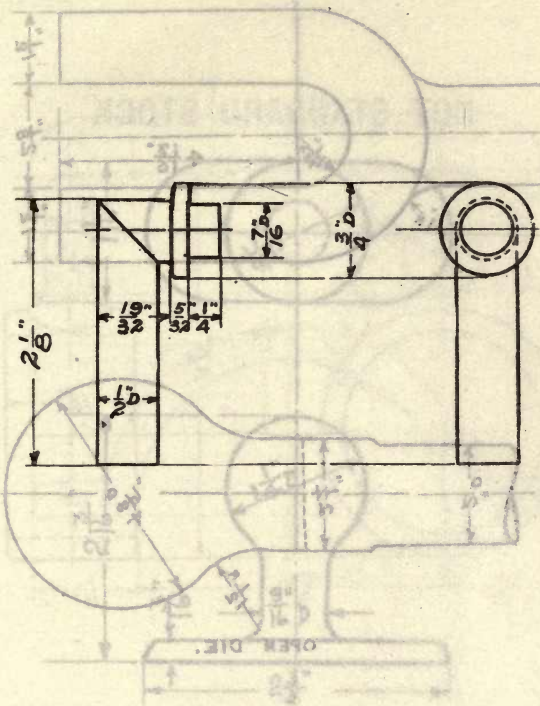

VENT, GAS

For battery box

Weight, **lbs.** **Die number, 1968-M**
Former die number, (11-3)

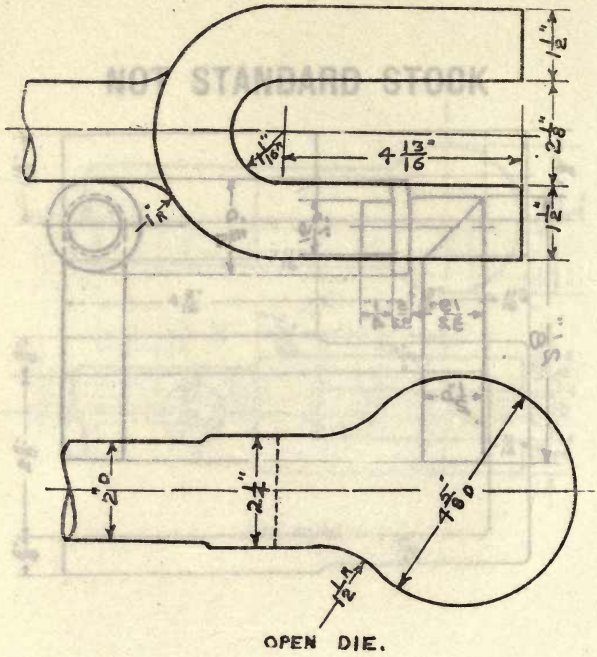

YOKE, STAY, BOILER

Weight, lbs. **Die number, 1969-M**
Former die number, (12-14)

NOT STANDARD STOCK

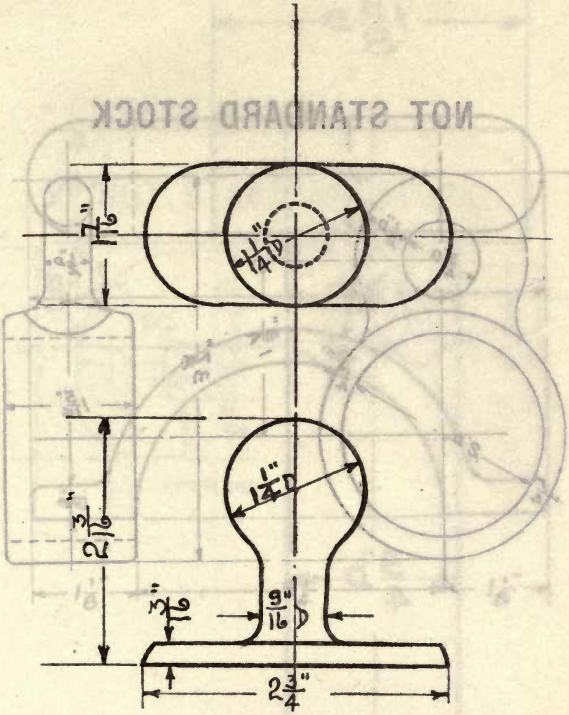

BALL, BOARD, BULLETIN

Weight (steel), 0.50 lb. **Die number, 1970-X**
Former die number, (408)

NOT STANDARD STOCK

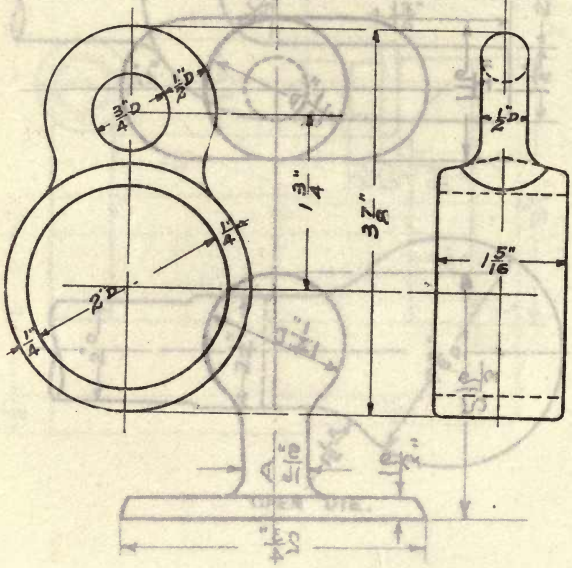

BAND, SHEET, MAIN

Weight (steel), 6.94 lb. **Die number, 1971-P**
Former die number, (381)

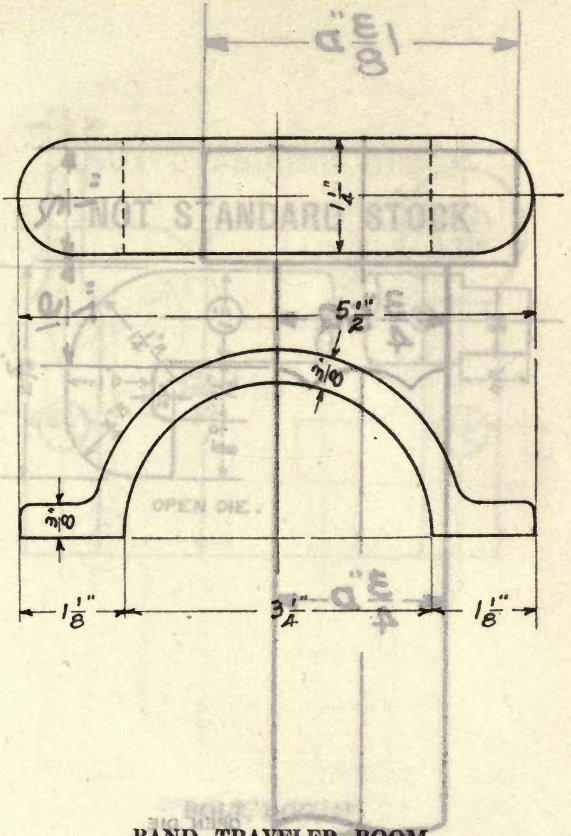

BAND, TRAVELER, BOOM

Weight (steel), 0.75 lb. **Die number, 1972-P**
Former die number, (254)

NOT STANDARD STOCK

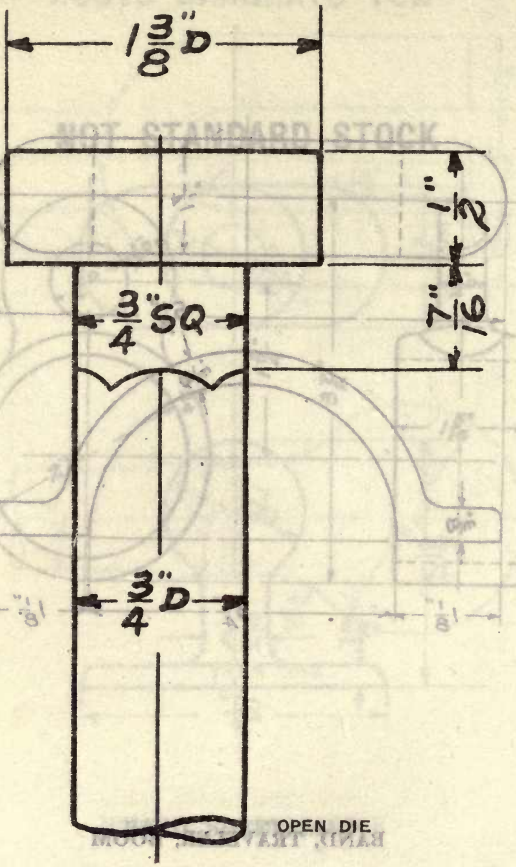

BOLT, BACKING, ARMOR, 3/4″

Weight, lbs. **Die number, 1973-Y**
Former die number, (55)

NOT STANDARD STOCK

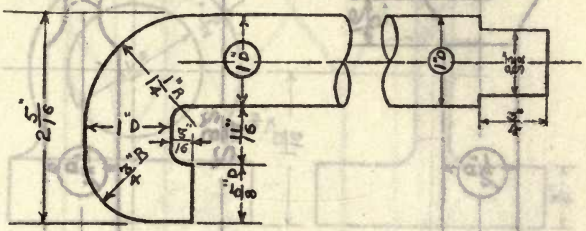

OPEN DIE.

BOLT, DOG, 1″

For 8″ and 12″ gun port shutters

Weight, lbs.

Die number, 1974-Y
Former die number, (419)

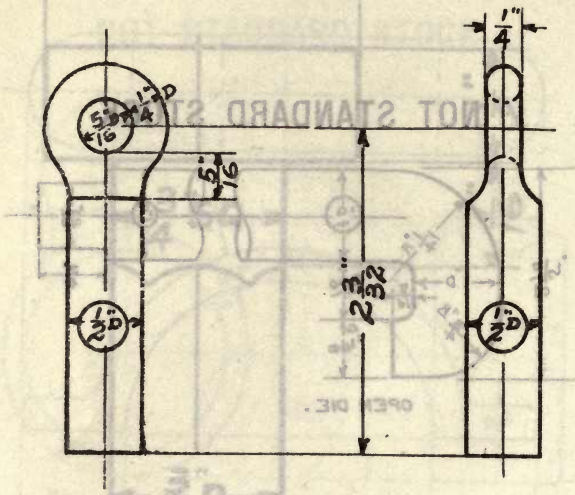

BOLT, EYE, 1/2″

Eye, 5/16″, Length, 2 3/32″

Weight (steel), 0.13 lb. **Die number, 1975-B**
Former die number, (25)

NOT STANDARD STOCK

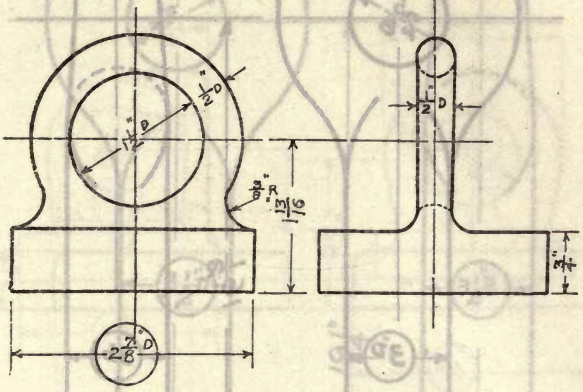

BOLT, EYE, 2 7/8″

Eye, 1 1/2″ Length, 1 13/16″

Weight, lbs. Die number, 1976-N
Former die number, (8-90)

NOT STANDARD STOCK

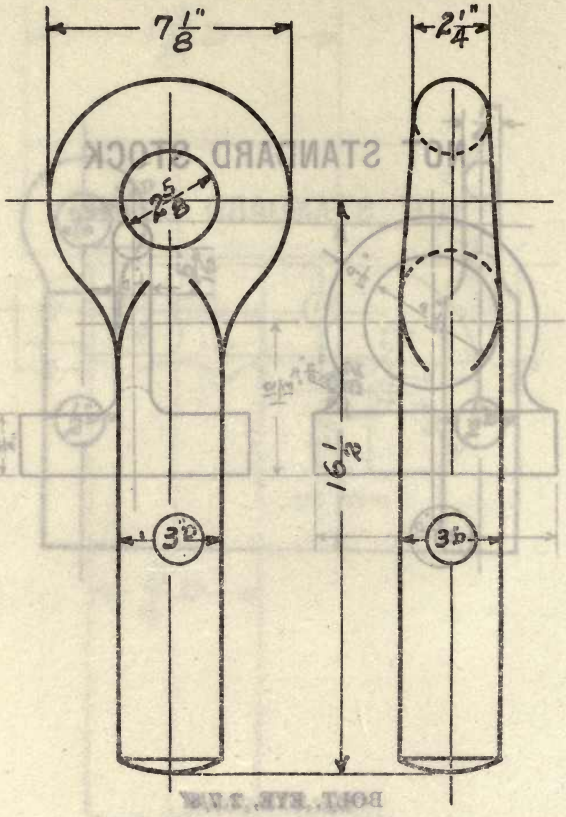

BOLT, EYE, 3″

Eye, 2 5/8″ Length, 16 1/2″

Weight, lbs. Die number, 1977-B
Former die number, (317)

NOT STANDARD STOCK

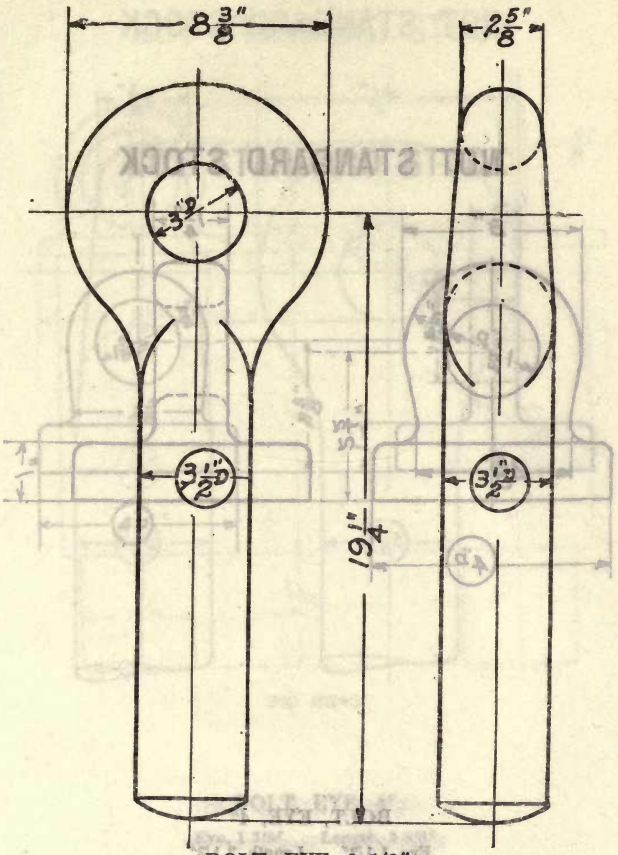

BOLT, EYE, 3 1/2″

Eye, 3″ Length, 19 1/4″

Weight, lbs. **Die number, 1978-B**
Former die number, (316)

NOT STANDARD STOCK

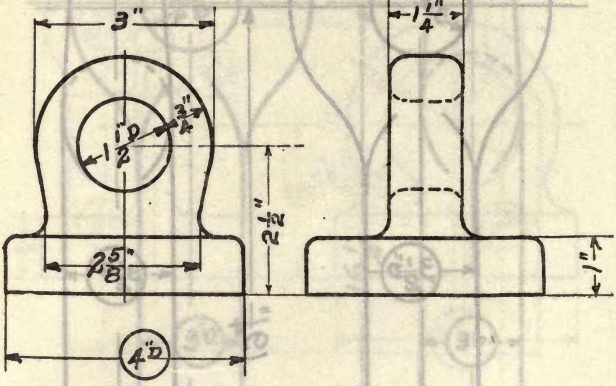

BOLT, EYE, 4″

Eye, 1 1/2″ Length, 2 1/2″

Weight (steel), 5.5 lbs. **Die number, 1979-Y**
Former die number, (425)

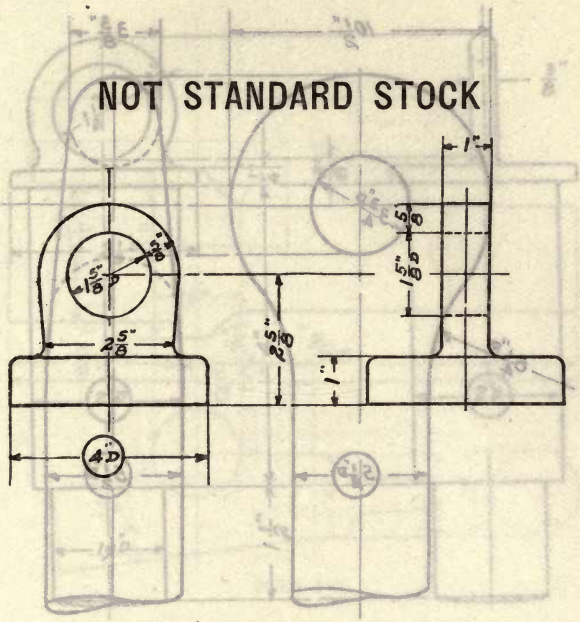

BOLT, EYE, 4″

Eye, 1 5/8″ Length, 2 5/8″

Weight (steel), 5.19 lbs. **Die number, 1980-X**
Former die number, (424)

NOT STANDARD STOCK

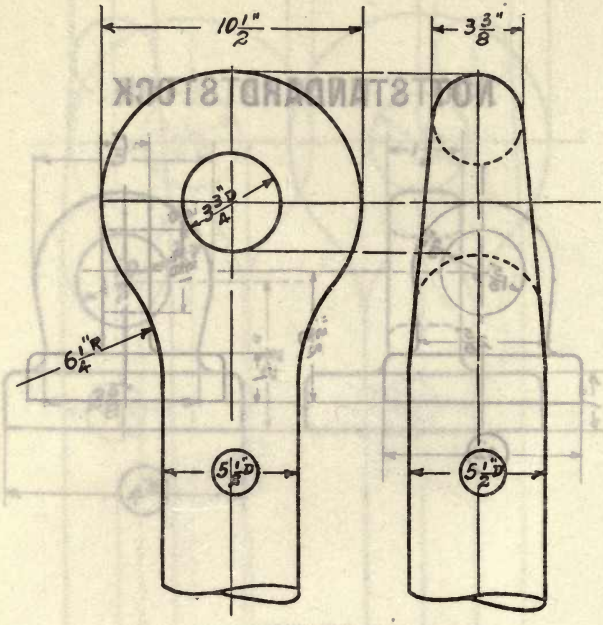

OPEN DIE

BOLT, EYE, 5 1/2″

Eye, 3 3/4″ Length, open die

Weight, lbs. **Die number, 1981-B**
Former die number, (530)

NOT STANDARD STOCK

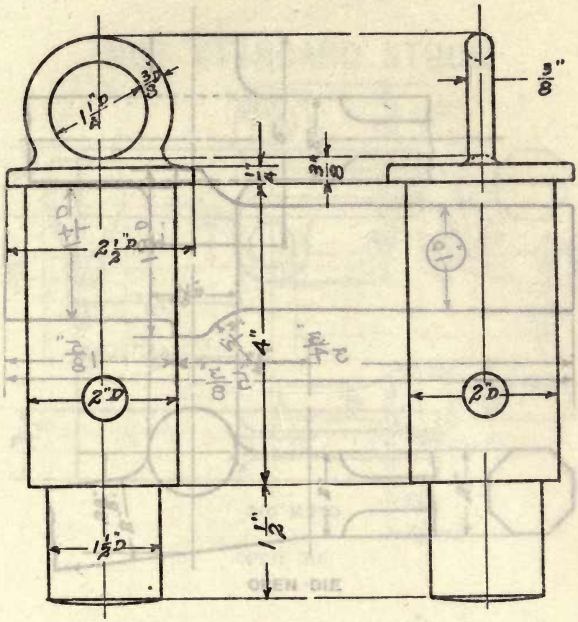

BOLT, EYE, COLLAR, 2″

Eye, 1 1/4″ Length, 5 1/2″

Weight (steel), 5.0 lbs. Die number, 1982-Y
Former die number, (378)

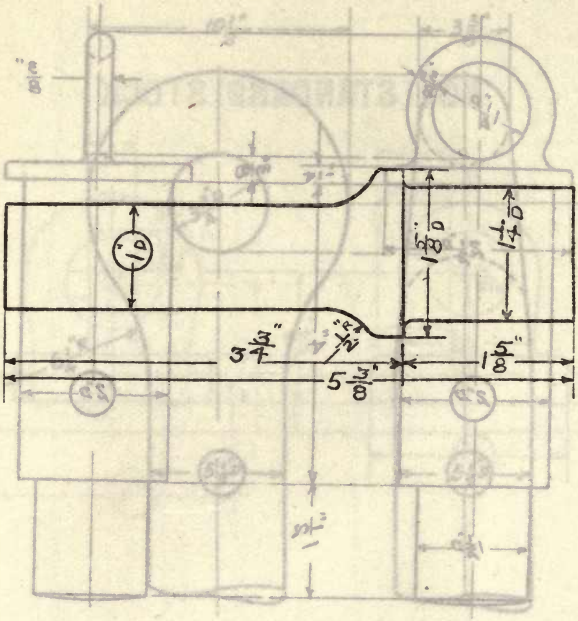

BOLT, SPINDLE, 1"

For boiler handhole covers

Weight, lbs. **Die number, 1983-Y**
Former die number, (1126)

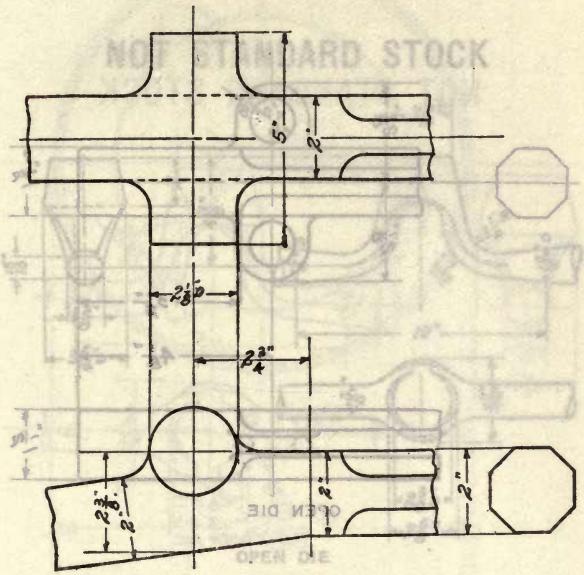

OPEN DIE

BOWSPRIT, INNER END

For sailing launches

Weight, lbs. **Die number, 1984-N**
Former die number, (3-48)

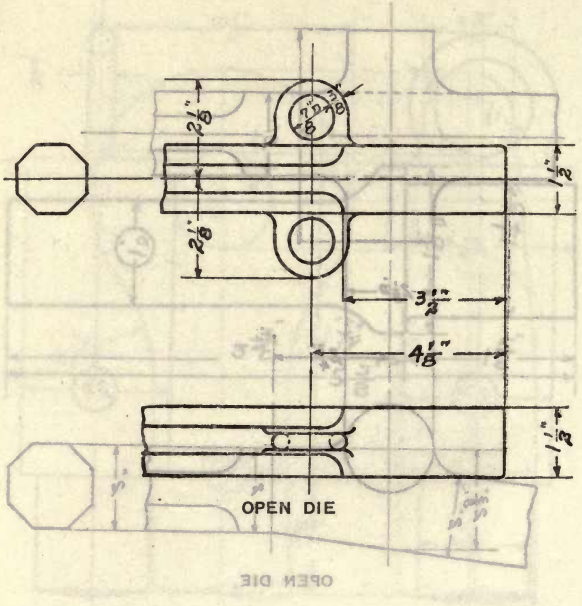

BOWSPRIT, OUTER END

For sailing launches

Weight, lbs. **Die number, 1985-N**
Former die number, (3-47)

NOT STANDARD STOCK

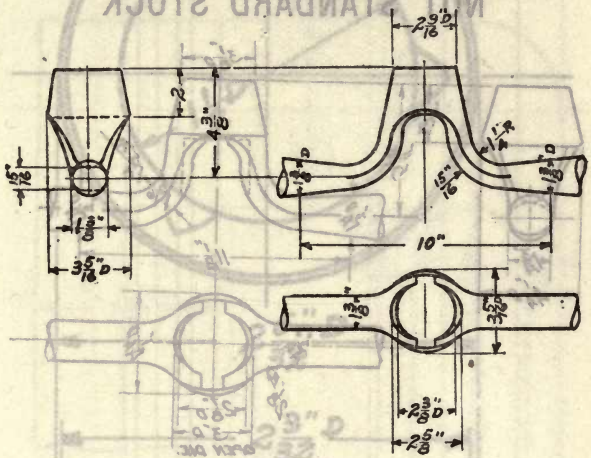

OPEN DIE

BOX, SWIVEL, CHAIN, 1″

Weight, lbs. **Die number, 1986-B**
Former die number, (233)

NOT STANDARD STOCK

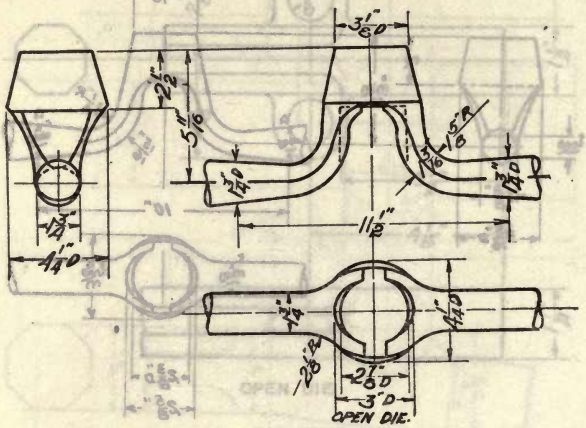

BOX, SWIVEL, CHAIN, 1 1/4″

Weight, lbs. **Die number, 1987-B**
Former die number, (219)

NOT STANDARD STOCK

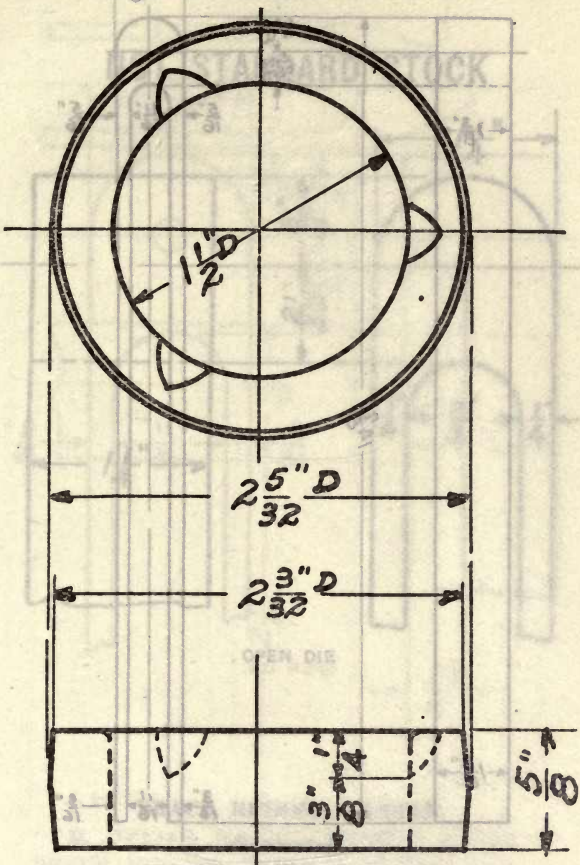

RING, CLINCH, SWIVEL, CHAIN, 1″

Weight, lbs. **Die number, 1988-B**
Former die number, (256)

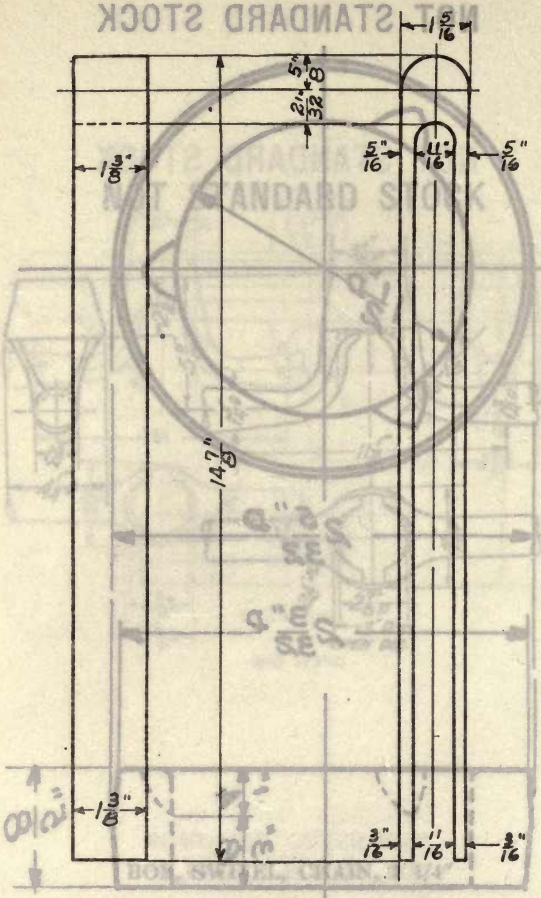

BRACE, RUDDER, CUTTER

Weight (steel), 4.0 lbs. **Die number, 1989-N**
Former die number, (4-35)

NOT STANDARD STOCK

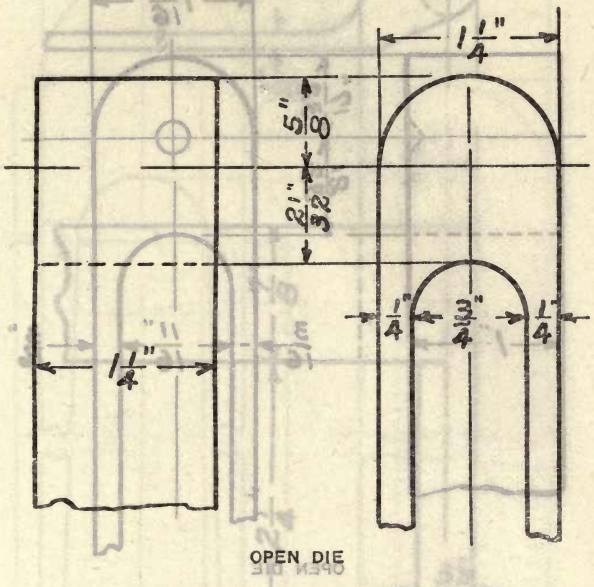

OPEN DIE

BRACE, RUDDER, CUTTER

Nonstandard

Weight, lbs. Die number, 1990-M
Former die number, (3-40)

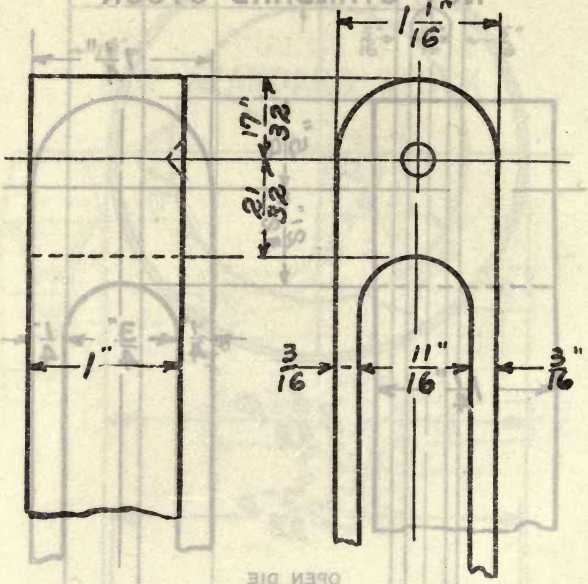

OPEN DIE

BRACE, RUDDER, CUTTER, RACING, 31′

Weight, lbs. **Die number, 1991-X**
Former die number, (515)

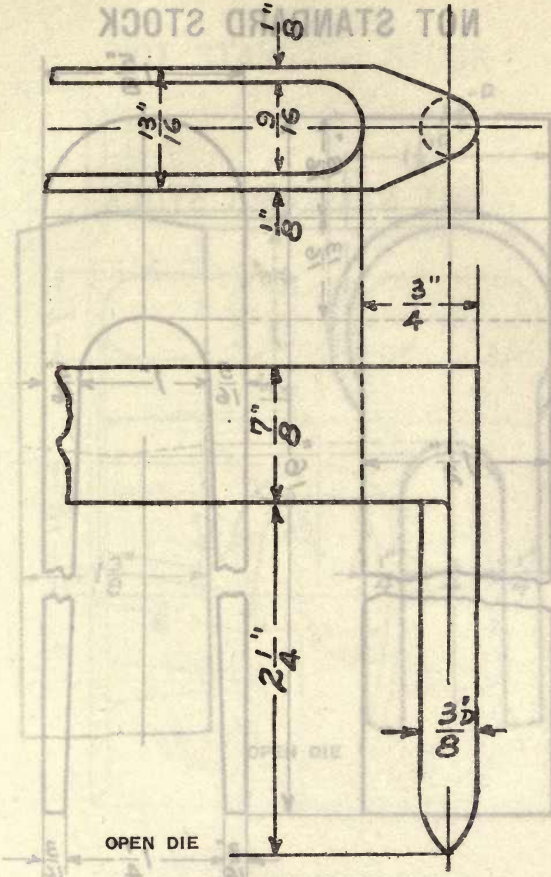

BRACE, RUDDER, DINGHY AND WHERRY

Weight, lbs. Die number, 1992-YP
Former die numbers, (513) (238)

NOT STANDARD STOCK

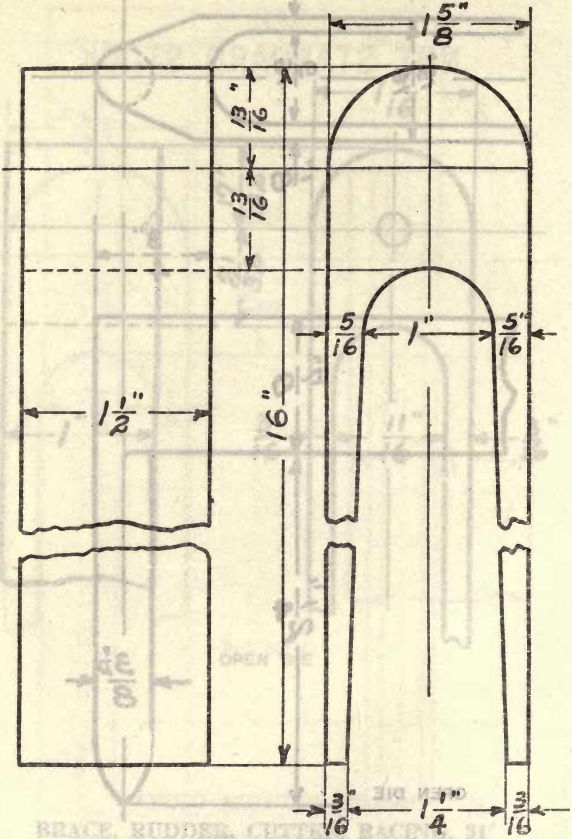

BRACE, RUDDER, LAUNCH, SAILING

Weight, **lbs.** **Die number, 1993-P**
Former die number, (257)

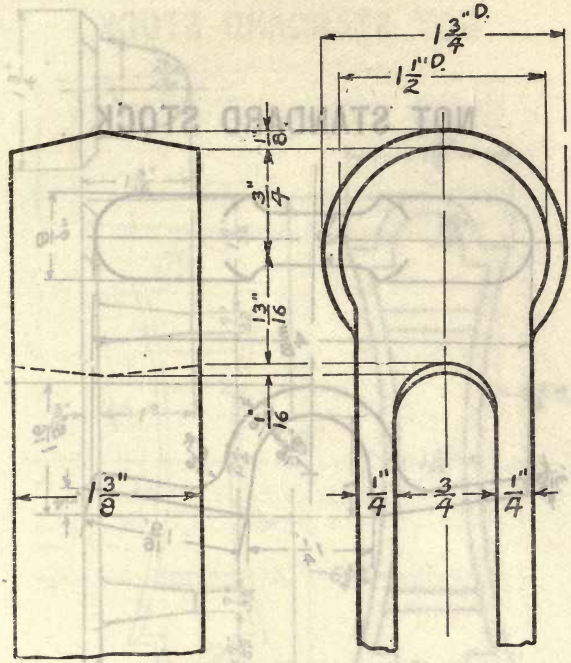

OPEN DIE

BRACE, RUDDER, WHALEBOAT

Weight, lbs. **Die number, 1994-YPM**
Former die numbers, (512) (237)

NOT STANDARD STOCK

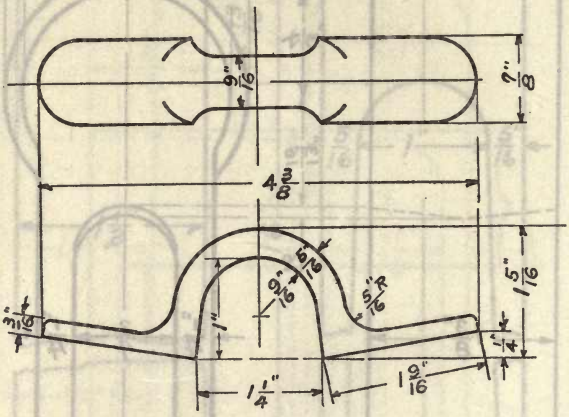

BRACKET, FENDER, PUDDING

Weight (steel), 0.25 lb. **Die number, 1995-Y**
Former die number, (282)

NOT STANDARD STOCK

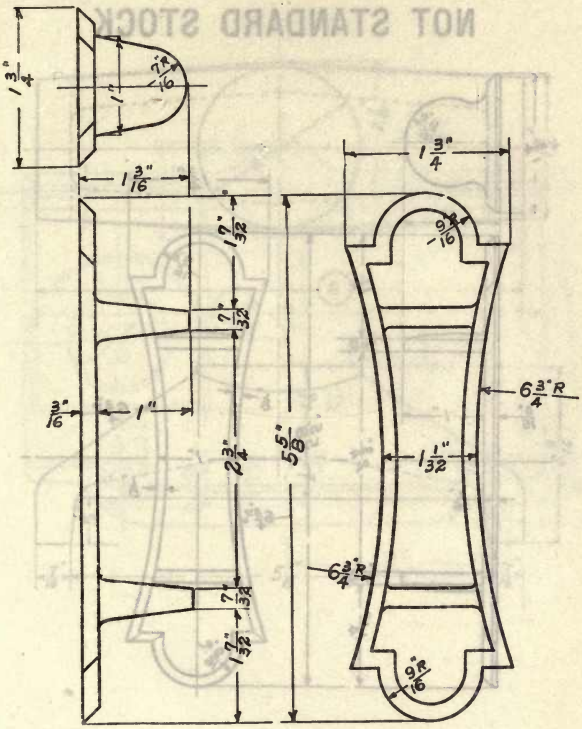

BRACKET, RACK, TOWEL

Weight (n. brass), 0.56 lb. **Die number, 1996-Y**
Former die number, (246)

NOT STANDARD STOCK

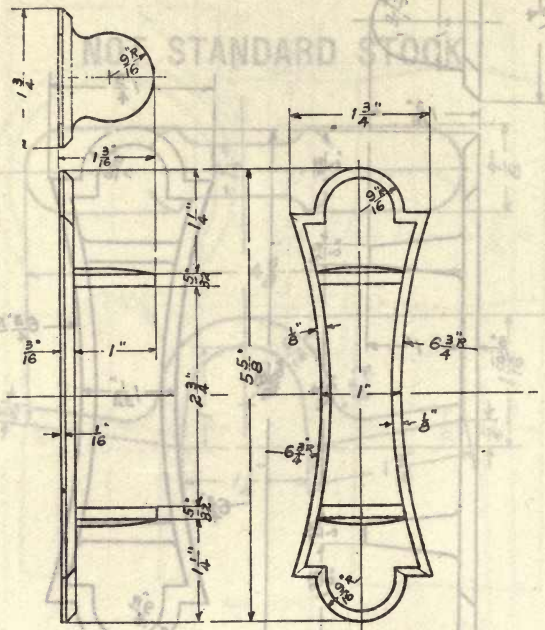

BRACKET, RACK, TOWEL

Weight (n. brass), lbs. **Die number, 1997-B**
Former die number, (107)

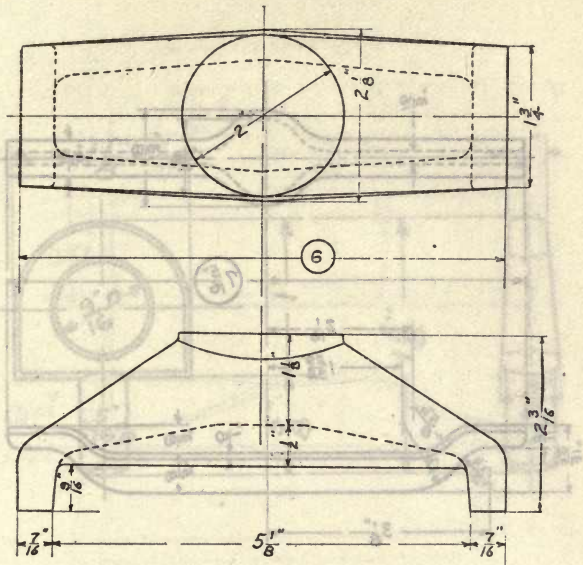

BRIDGE, CLAMPING, 6″

For rectangular handhole cover

Weight, lbs. **Die number, 1998-Y**
Former die number, (1138)

NOT STANDARD STOCK

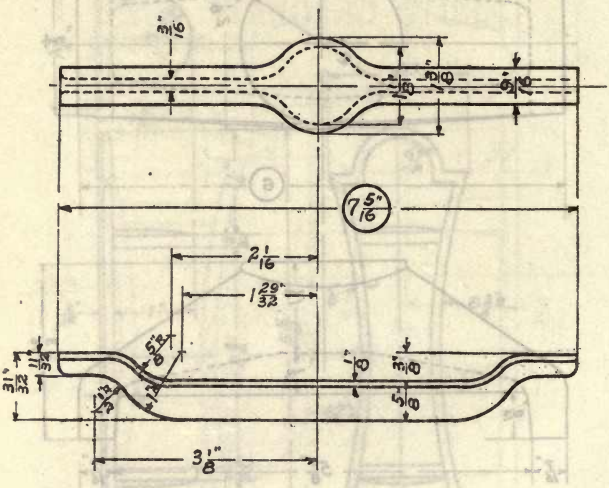

BRIDGE, CLAMPING, 7 5/16″

Weight (steel), 0.75 lb. **Die number, 1999-N**
Former die number, (3-107)

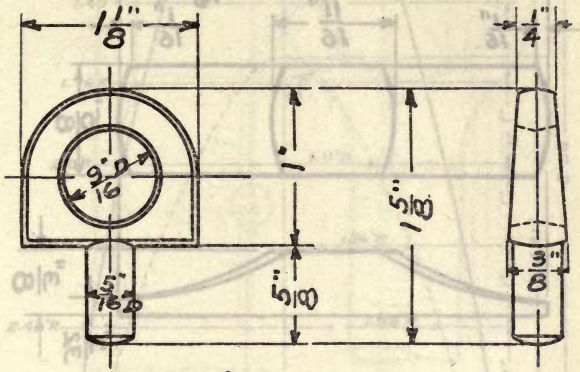

BUTTON, WITH EYE

Weight (steel), 0.06 lb. **Die number, 2000-Y**
Former die number, (413)

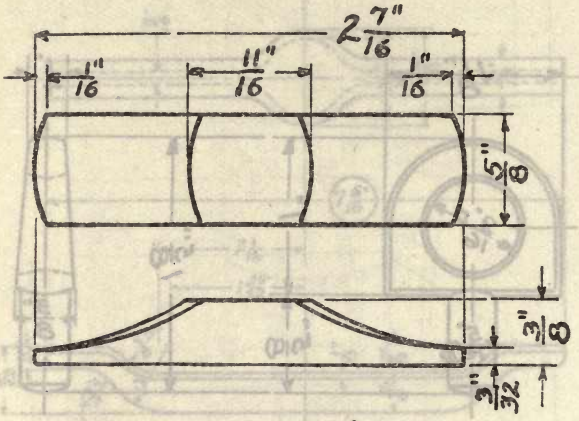

BUTTON, BOARD, BOTTOM

For small boats

Weight (steel), 0.12 lb. Die number, 2001-YM
Former die number, (13)

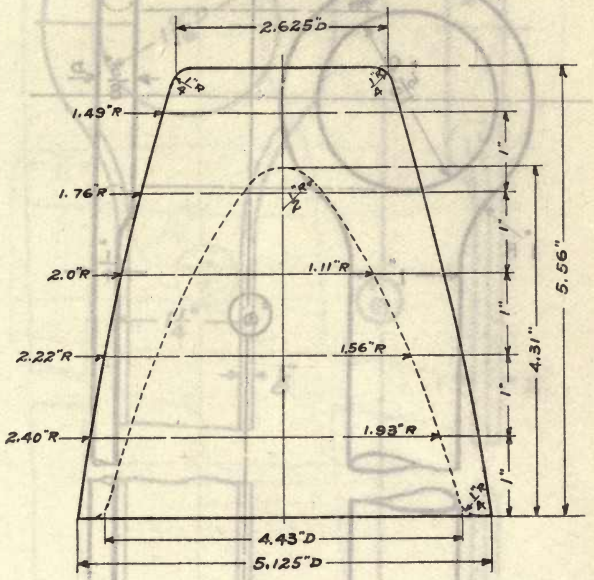

CAP, PROJECTILE, 6″

Weight, **lbs.** **Die number, 2002-B**
Former die number, (539)

NOT STANDARD STOCK

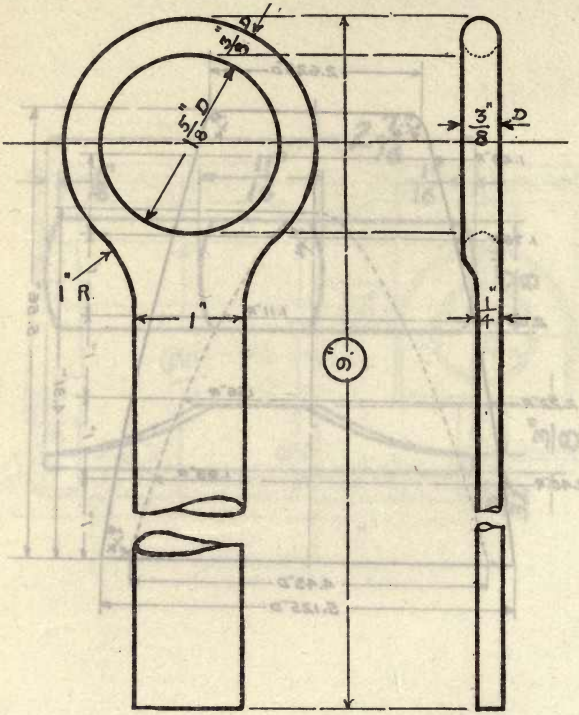

CHAIN PLATE, 9″

Weight (steel), 0.75 lb. **Die number, 2003-Y**
Former die number, (248)

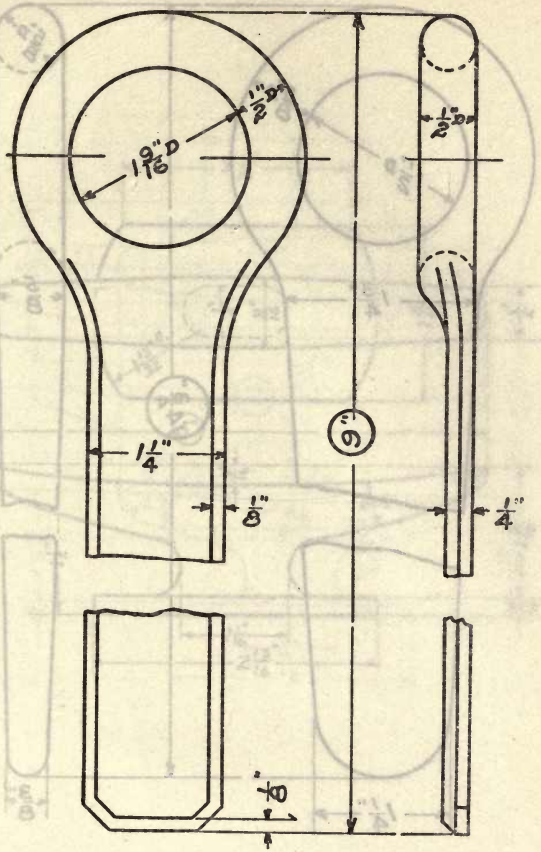

CHAIN PLATE, 9″

Weight (steel), 1.1 lbs.

Die number, 2004-B
Former die number, (76)

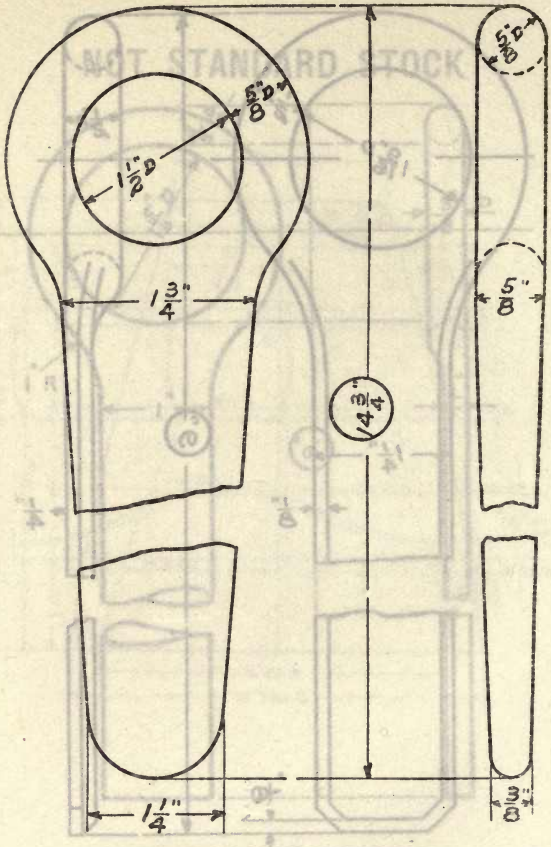

CHAIN PLATE, 14 3/4″

Weight (steel), 3.25 lbs. **Die number, 2005-PB**
Former die number, (255)

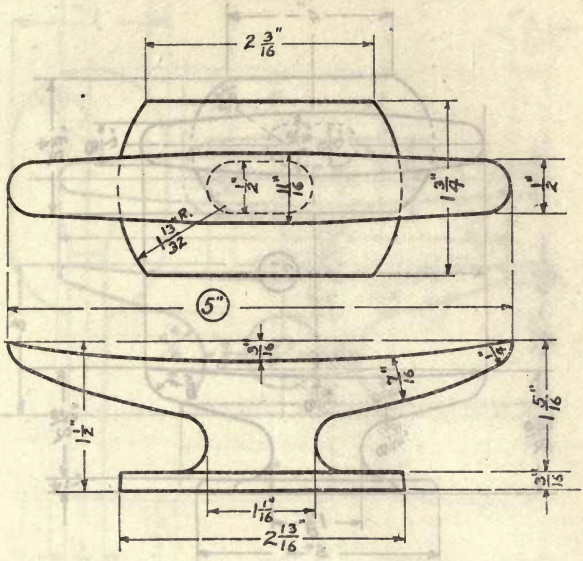

CLEAT, 5″

Weight (steel), 0.88 lb. **Die number, 2006-YM**
Former die number, (367)

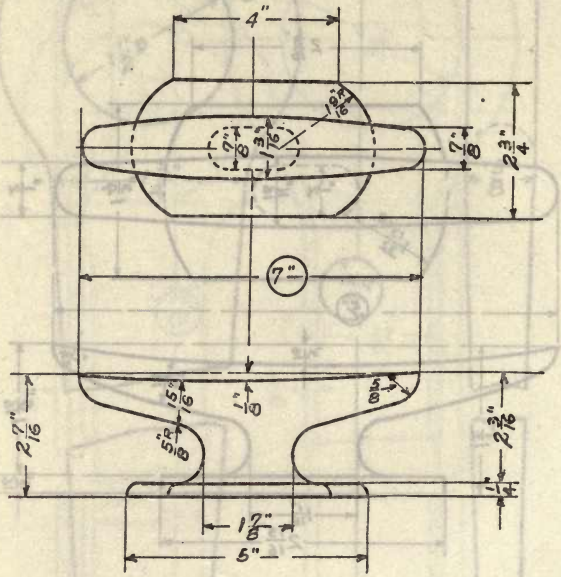

CLEAT, 7″

Weight (steel), 3.12 lbs. **Die number, 2007-Y**
Former die number, (369)

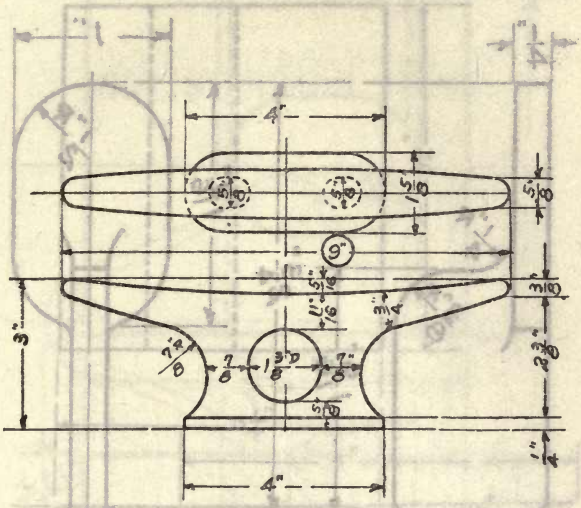

CLEAT, 9″

Weight (steel), 2.62 lbs. **Die number, 2008-Y**
Former die number, (370)

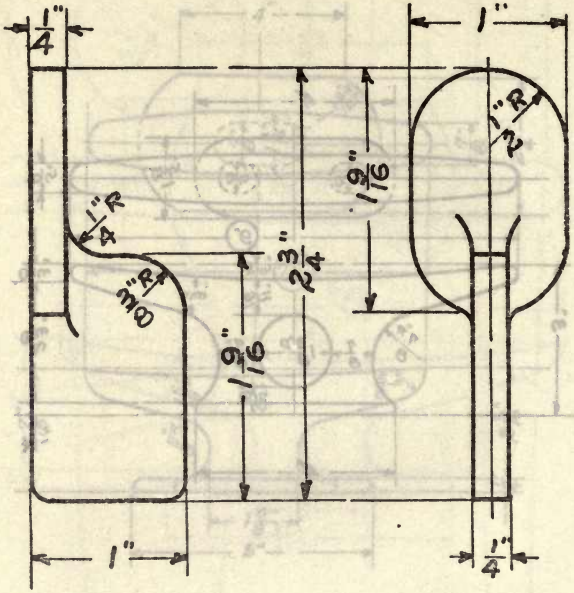

CLIP, HANGER, PIPE

Weight, **lbs.** **Die number, 2009-Y**
Former die number, (283)

NOT STANDARD STOCK

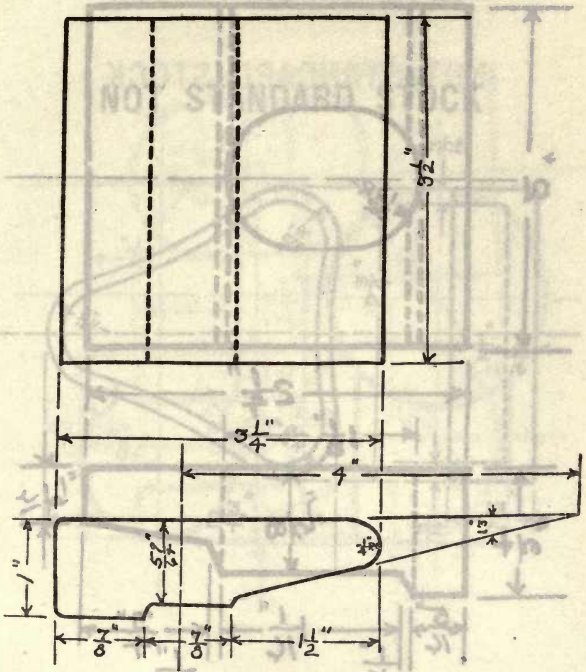

CLIP, RAIL

Weight (steel), 2.0 lbs. **Die number, 2010-N**
Former die number, (3-87)

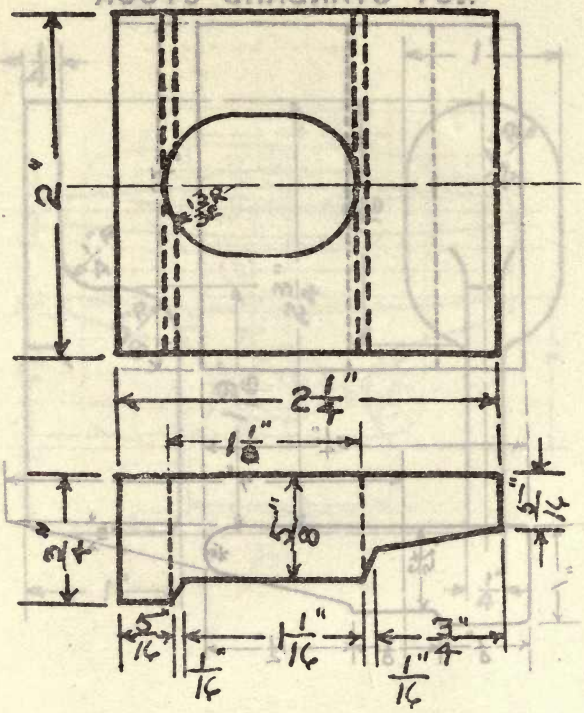

CLIP, RAIL

Weight, **lbs.** **Die number, 2011-M**
Former die number, (3-72)

NOT STANDARD STOCK

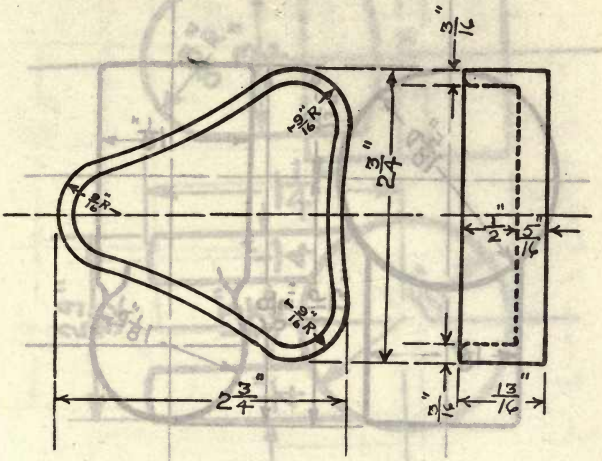

CLIP, SHELL

Weight (steel), 0.81 lb. **Die number, 2012-Y**
Former die number, (118)

NOT STANDARD STOCK

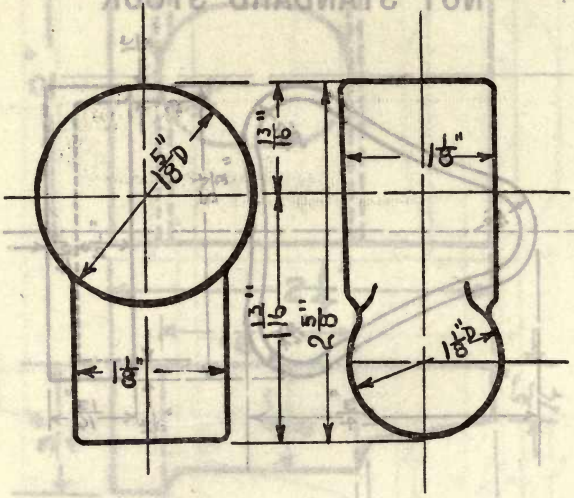

COLLAR, LUG

Weight (steel), 0.75 lb. **Die number, 2013-Y**
Former die number, (398)

NOT STANDARD STOCK

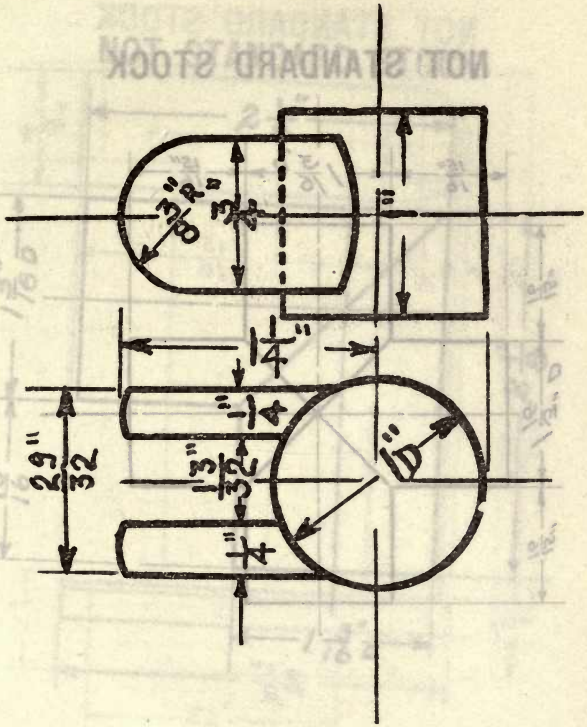

COLLAR, LUG

Weight (steel), 0.25 lb. **Die number, 2014-Y**
Former die number, (397)

NOT STANDARD STOCK

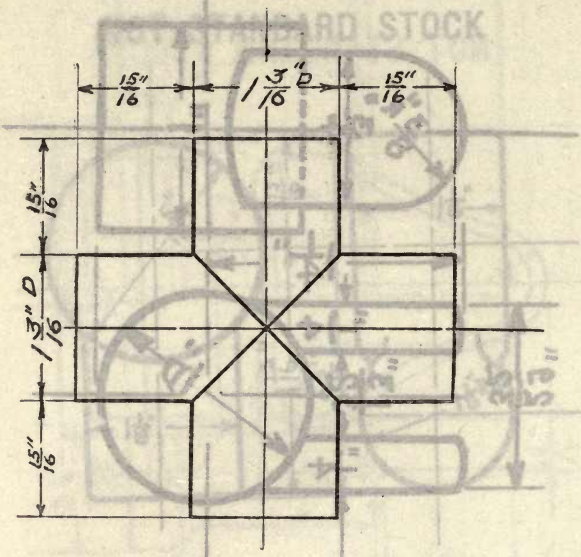

CROSS, HIGH PRESSURE, 1/2″.

Weight (n. brass), 1.8 lbs. **Die number, 2015-Y**
Former die number, (383)

NOT STANDARD STOCK

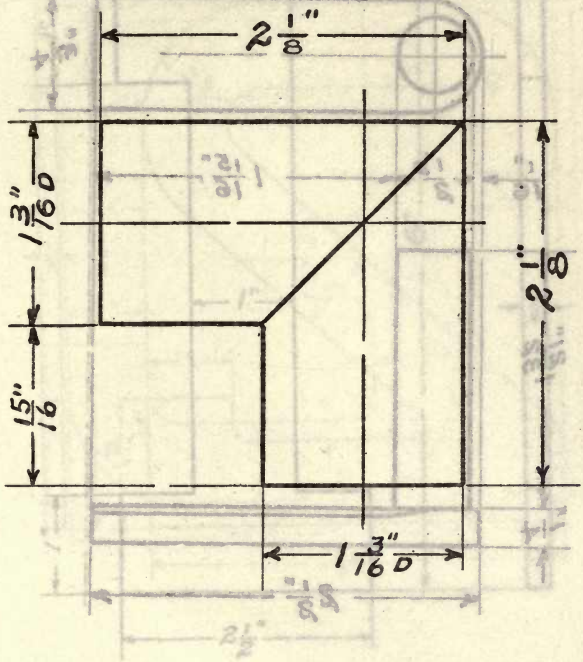

ELBOW, HIGH PRESSURE, 1/2″

Weight (n. brass), 1.1 lbs. Die number, 2016-Y
Former die number, (379)

NOT STANDARD STOCK

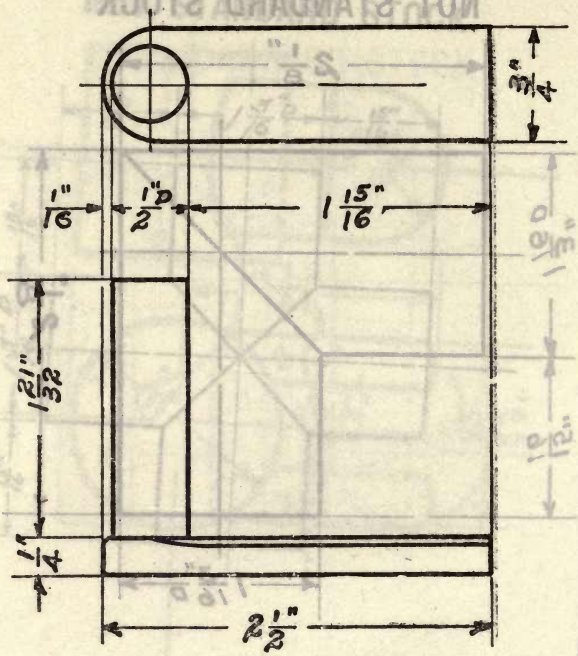

FASTENER, LOCKER, WIRE

Weight (steel), 0.38 lb. **Die number, 2017-Y**
Former die number, (486-2)

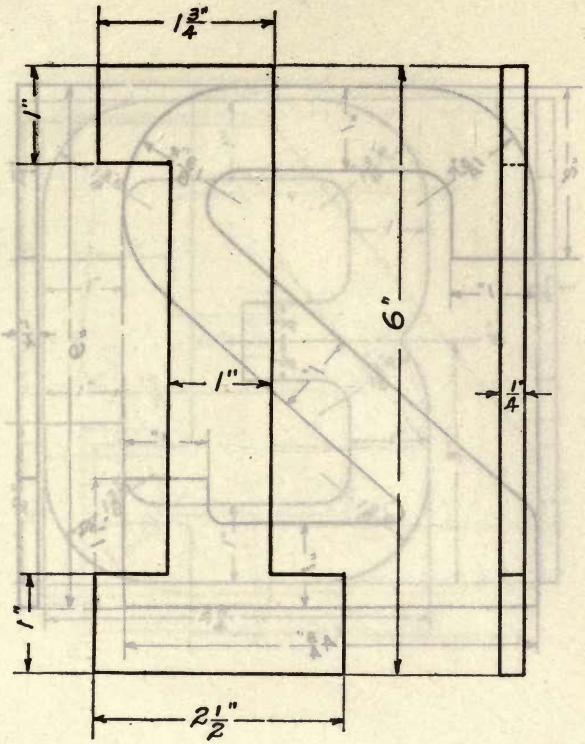

FIGURE, DRAFT

Weight (steel), 0.38 lb. **Die number, 2018-N**
Former die number, (3-34)

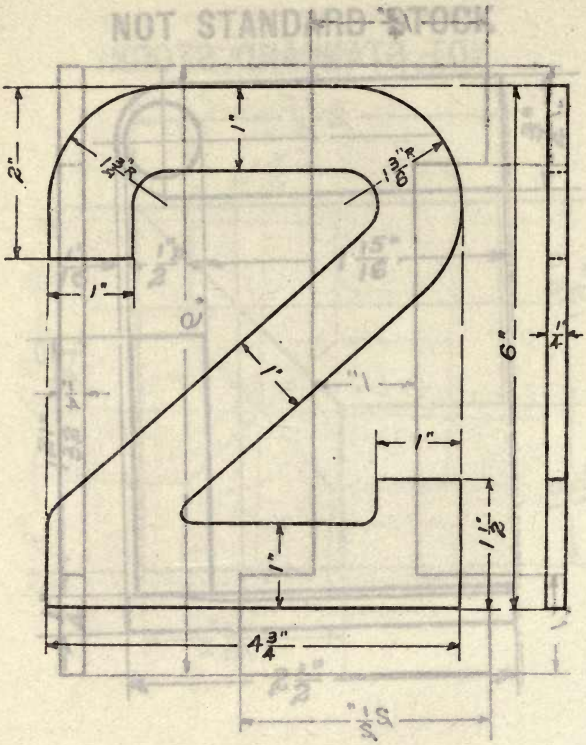

FIGURE, DRAFT

Weight (steel), 0.75 lb. **Die number, 2019-N**
Former die number, (3-35)

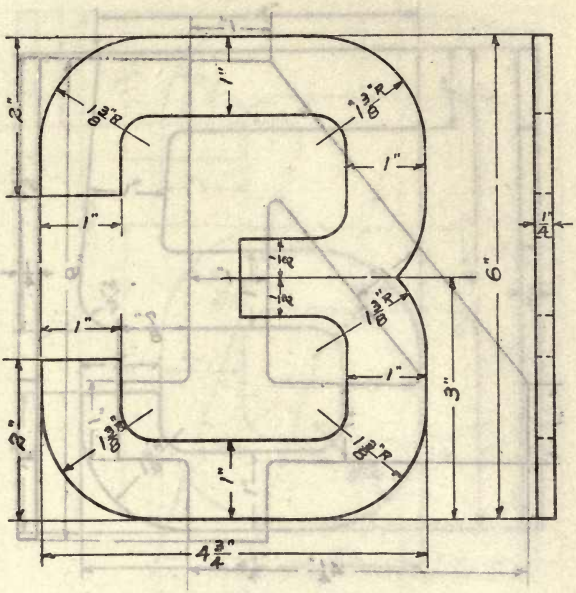

FIGURE, DRAFT

Weight (steel), 0.75 lb. **Die number, 2020-N**
Former die number, (3-36)

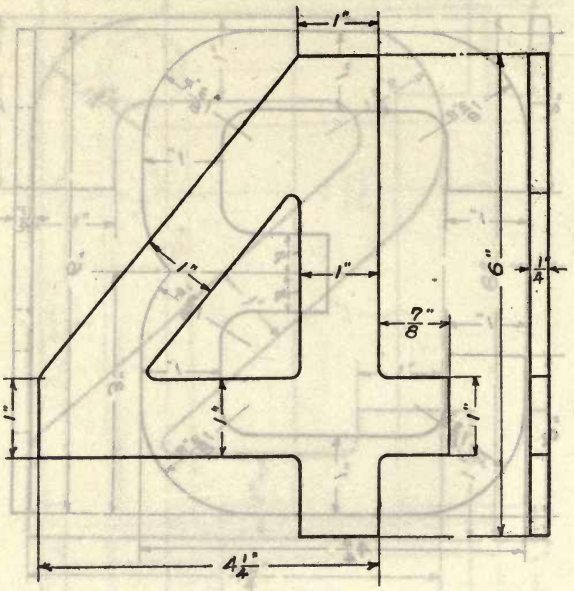

FIGURE, DRAFT

Weight (steel), 0.50 lb. **Die number, 2021-N**
Former die number, (3-37)

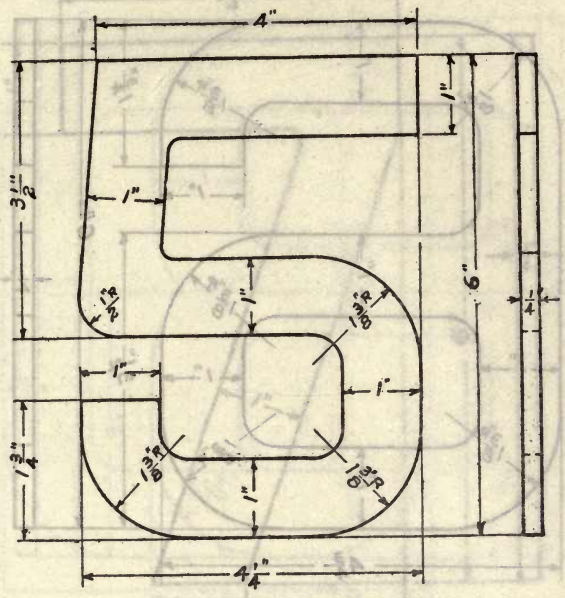

FIGURE, DRAFT

Weight (steel), 0.75 lb. **Die number, 2022-N**
Former die number, (3-38)

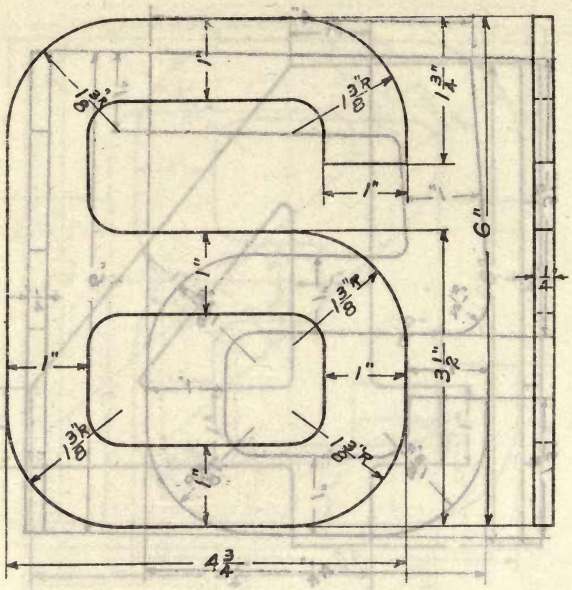

FIGURE, DRAFT

Weight (steel), 0.75 lb. Die number, 2023-N
Former die numbers, (3-39 & 3-42)

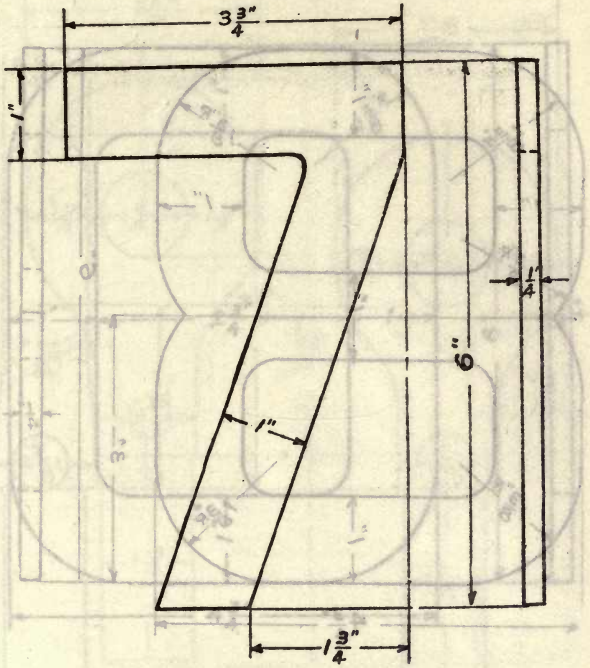

FIGURE, DRAFT

Weight (steel), 0.50 lb. Die number, 2024-N
Former die number, (3-40)

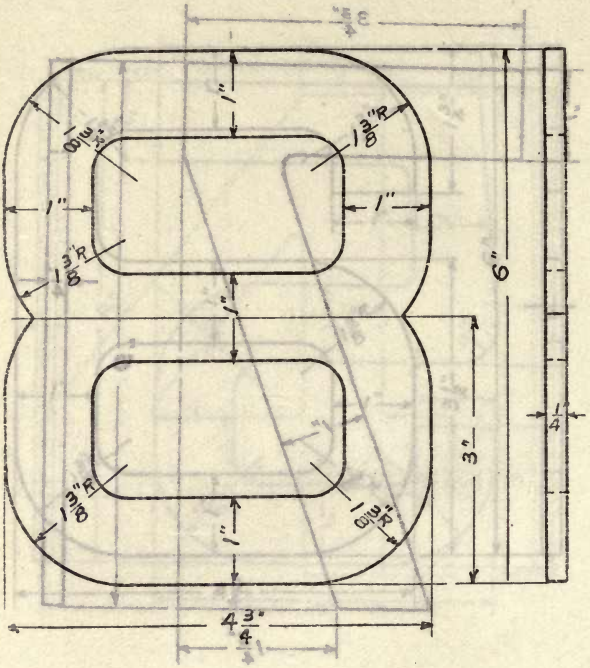

FIGURE, DRAFT

Weight (steel), 1.0 lb. Die number, 2025-N
Former die number, (3-41)

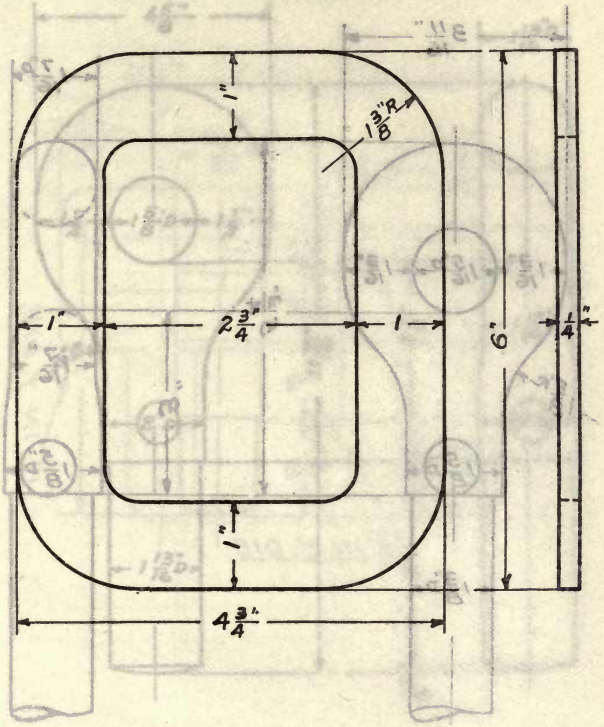

FIGURE, DRAFT

Weight (steel), 0.75 lb. **Die number, 2026-N**
Former die number, (3-43)

NOT STANDARD STOCK

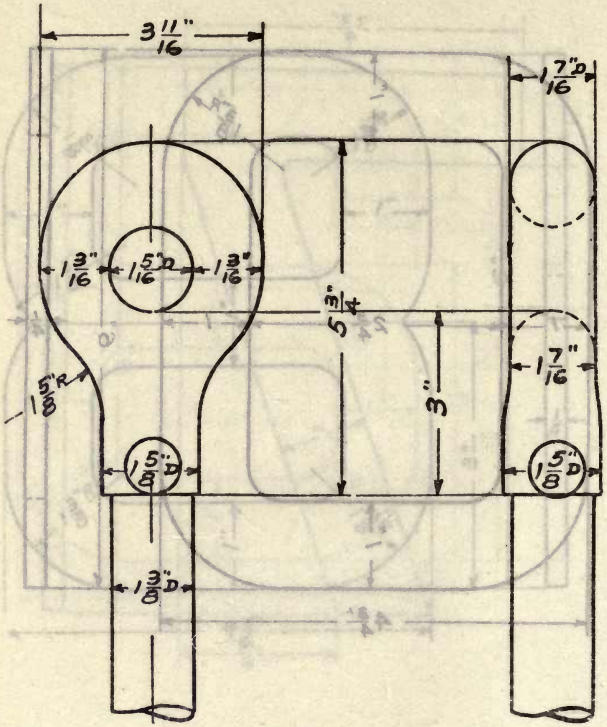

OPEN DIE

EYE, SWIVEL, 1 5/8″

Weight, lbs. Die number, 2027-B
Former die number, (221)

NOT STANDARD STOCK

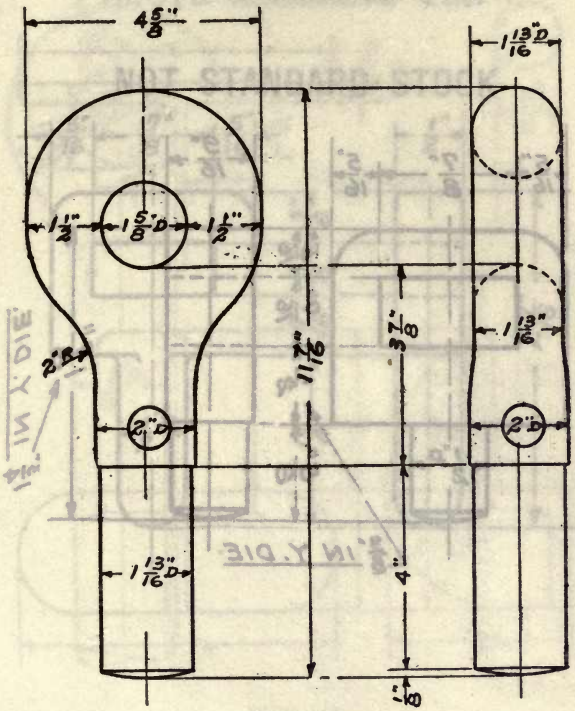

EYE, SWIVEL, 2″

Weight, lbs. **Die number, 2028-B**
Former die number, (220)

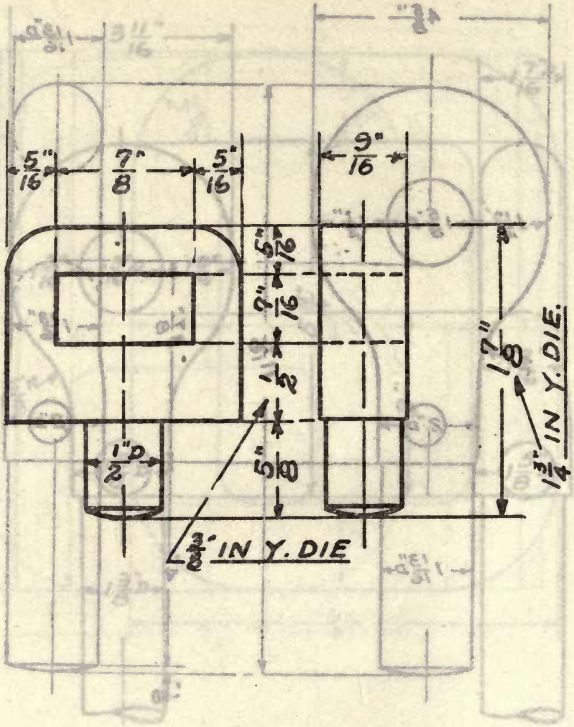

EYE, TARPAULIN

Weight (steel), 0.20 lb. **Die number, 2029-MY**
Former die numbers, (4-35) (98)

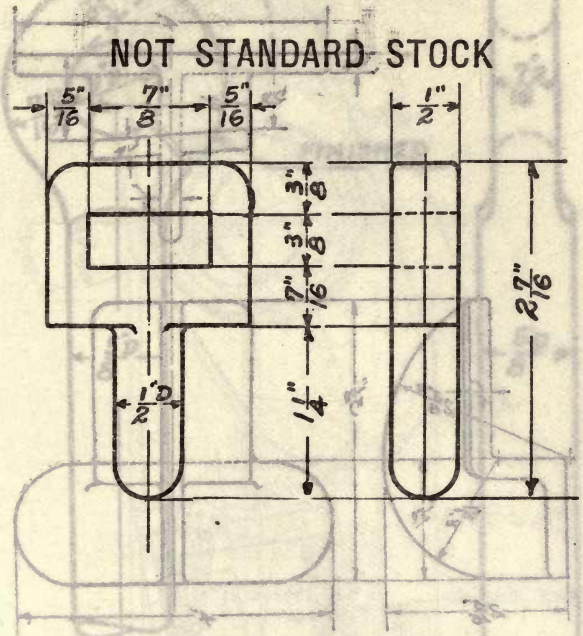

EYE, TARPAULIN

Weight (steel), 0.31 lb. **Die number, 2030-B**
Former die number, (109)

NOT STANDARD STOCK

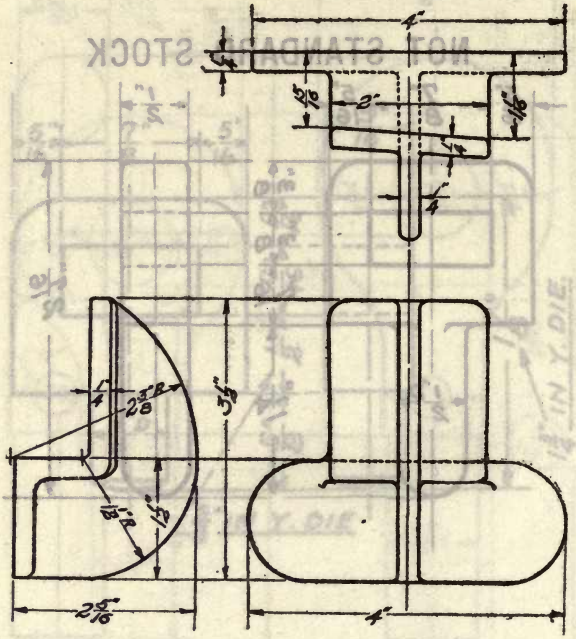

FITTING, BAR, BATTEN

Weight (steel), 1.2 lbs. **Die number, 2031-MB**
Former die numbers, (3-33) (86)

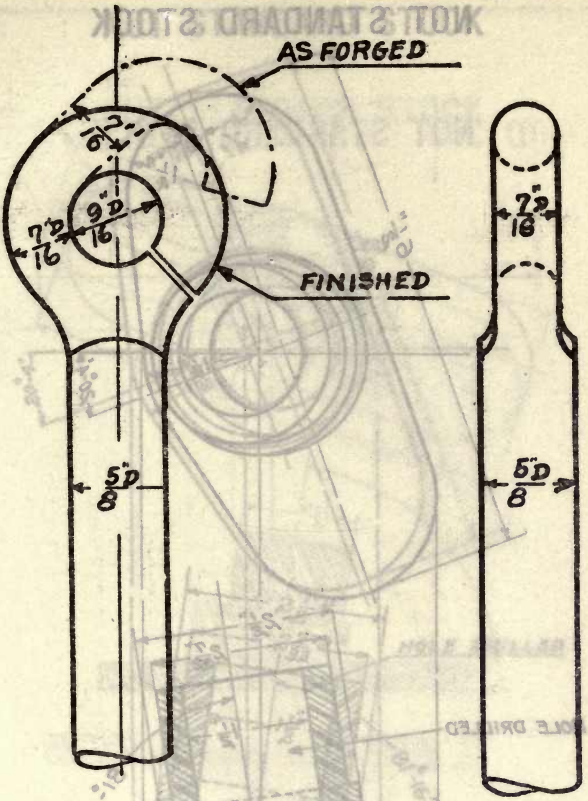

OPEN DIE

FITTINGS, BENCH AND TABLE, MESS

Rod, brace, eye end

Weight, lbs. **Die number, 2032-M**
Former die number, (4-65)

NOT STANDARD STOCK

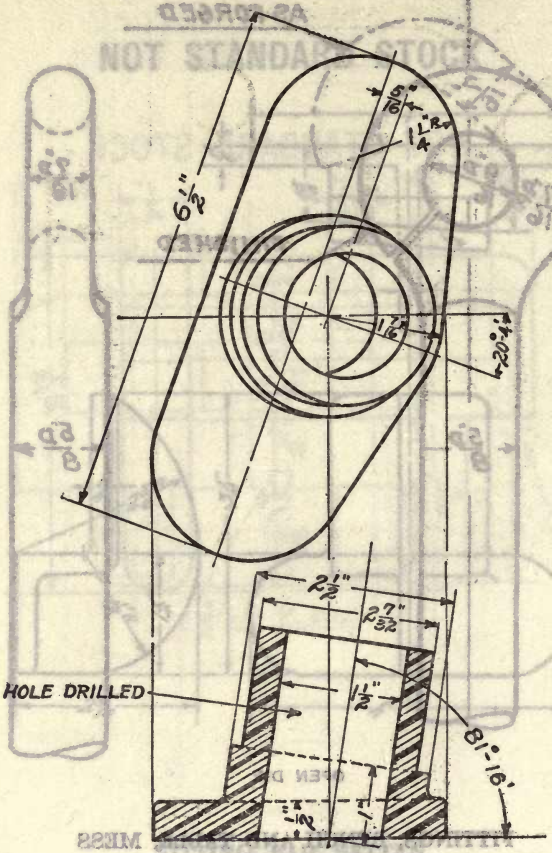

FITTINGS, MAST, CAGE

Bottom, left hand

Weight (steel), 5.0 lbs. **Die number, 2033-N**
Former die number, (3-81)

NOT STANDARD STOCK

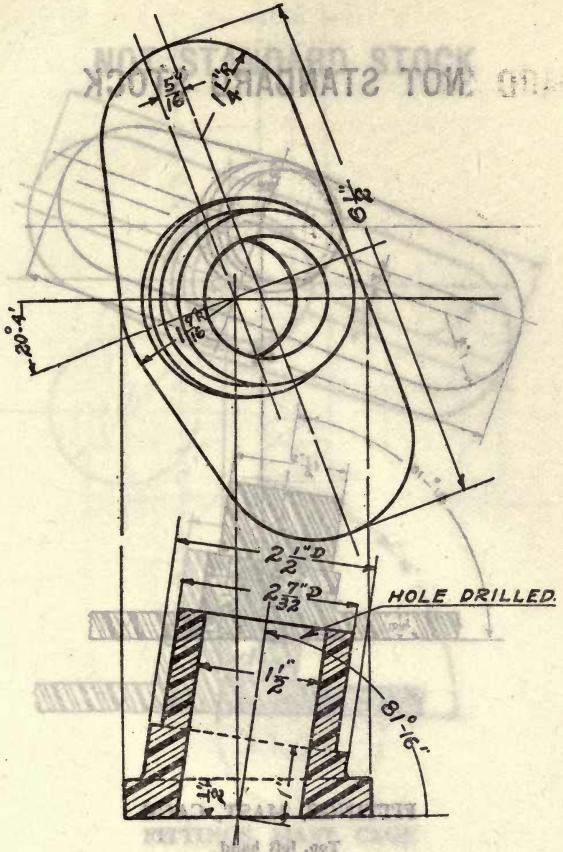

FITTINGS, MAST, CAGE

Bottom, right hand

Weight (steel), 5.0 lbs. **Die number, 2034-N**
Former die number, (3-80)

NOT STANDARD STOCK

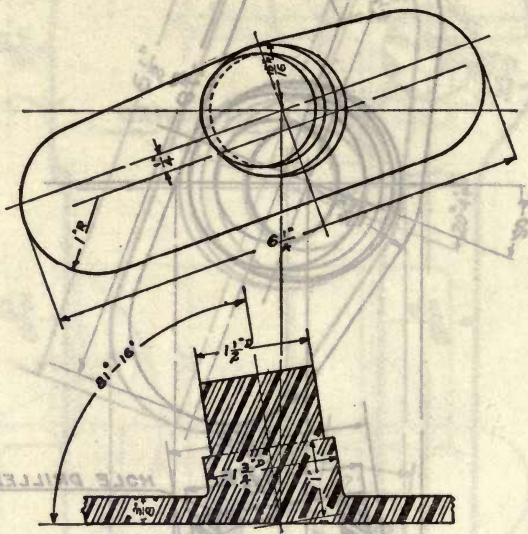

FITTINGS, MAST, CAGE

Top, left hand

Weight (steel), 4.5 lbs. **Die number, 2035-N**
Former die number, (3-79)

NOT STANDARD STOCK

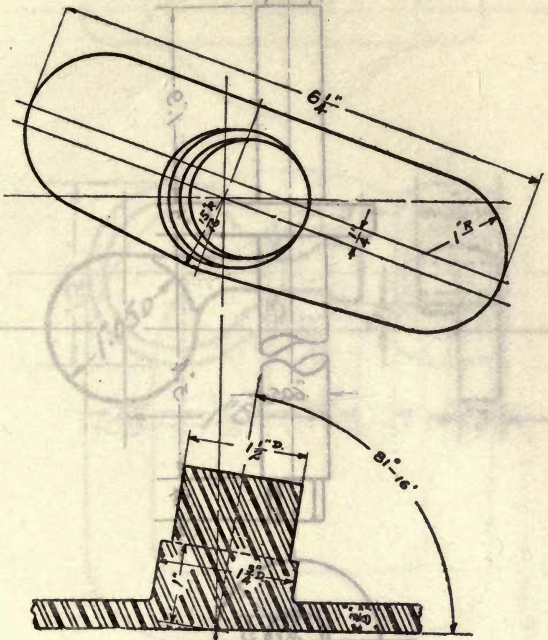

FITTINGS, MAST, CAGE

Top, right hand

Weight (steel), 4.5 lbs. **Die number, 2036-N**
Former die number, (3-78)

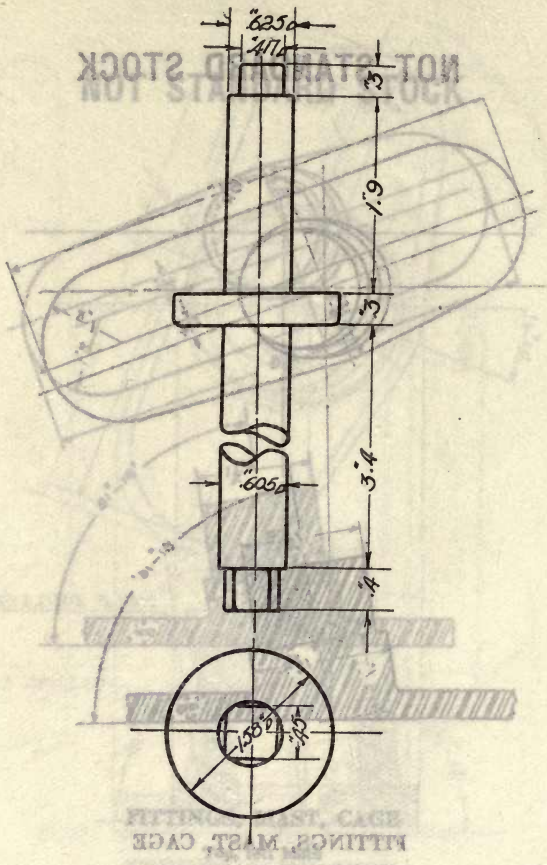

FITTINGS, MINE, N. D.

Axis, drum, cable

Weight (brass), 1.0 lb. **Die number, 2037-N**
Former die number, (3-119)

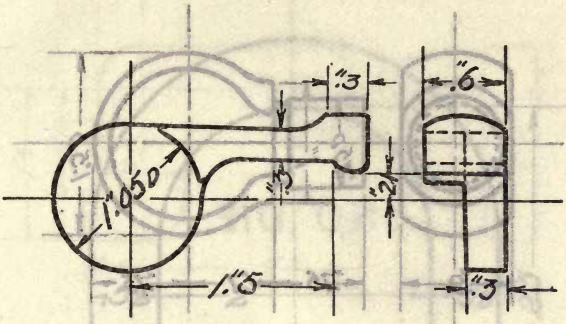

FITTINGS, MINE, N. D

Claw, stricker

Weight (steel), 0.13 lb. **Die number, 2038-N**
Former die number, (3-118)

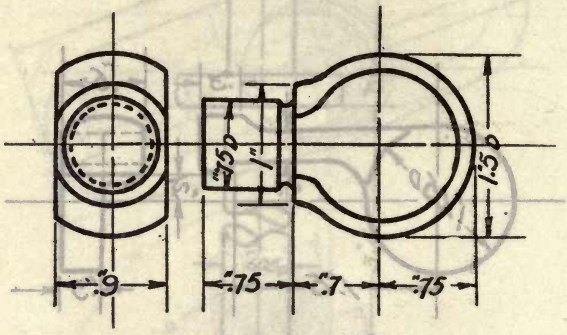

FITTINGS, MINE, N. D.

Connection, cable

Weight (steel), 0.25 lb. **Die number, 2039-N**
Former die number, (3-116)

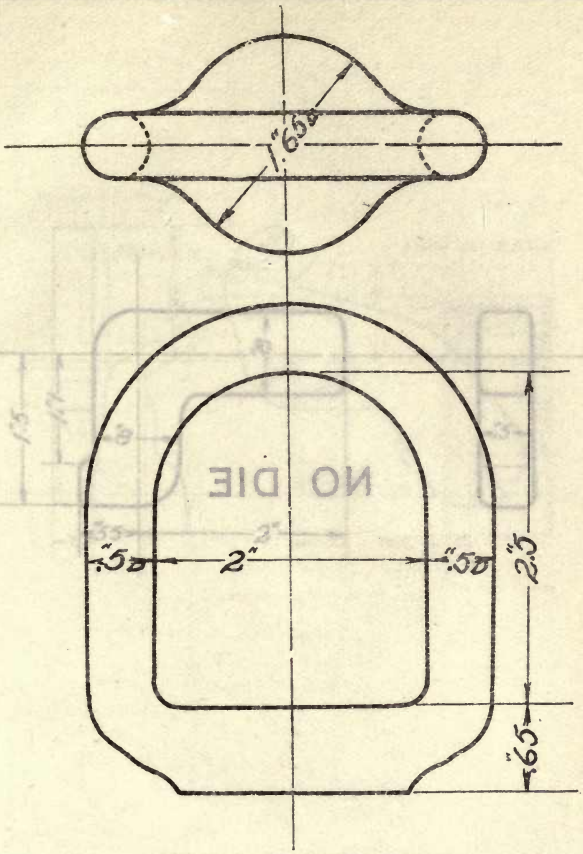

FITTINGS, MINE, N. D.

Eye, lifting

Weight (steel), 1.0 lb. **Die number, 2040-N**
Former die number, (3-126)

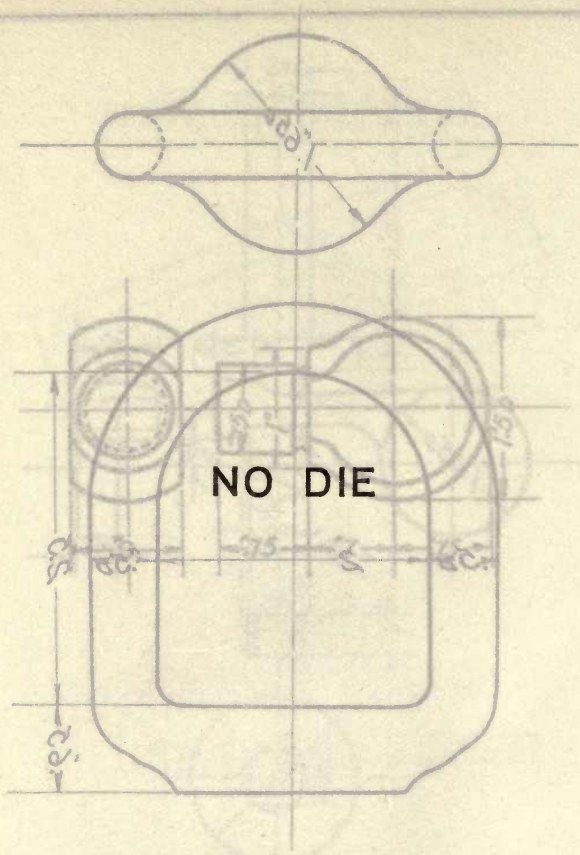

Die number, 2041

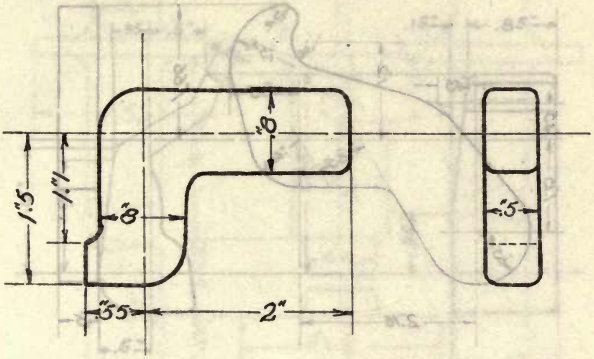

FITTINGS, MINE, N. D.

Head, pin, shackle

Weight (steel), 0.25 lb. **Die number, 2042-N**
Former die number, (3-115)

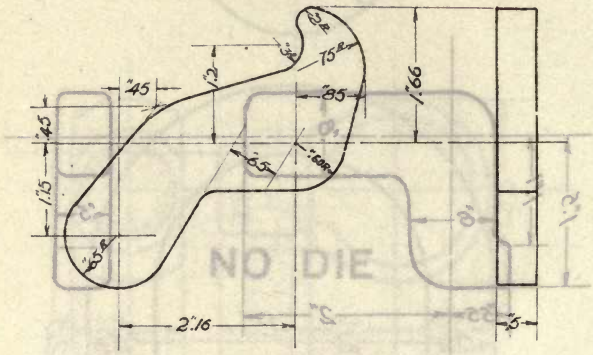

FITTINGS, MINE, N. D.

Lever

Weight (brass), 0.38 lb. **Die number, 2043-N**
Former die number, (3-122)

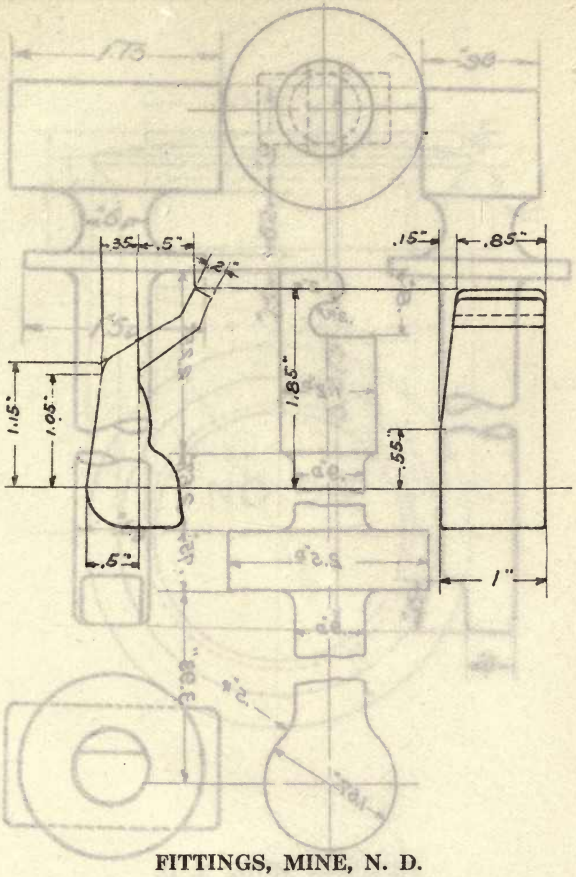

FITTINGS, MINE, N. D.

Pawl, brake

Weight (brass), 0.25 lb. **Die number, 2044-N**
Former die number, (3-121)

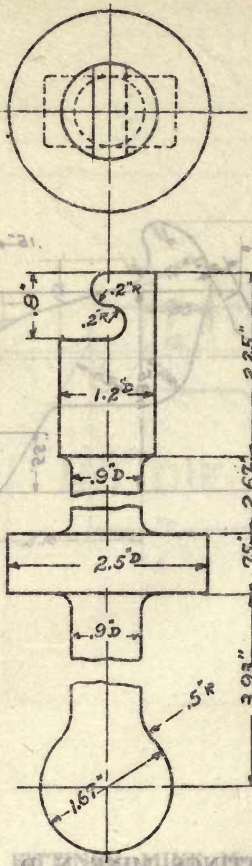

FITTINGS, MINE, N. D.

Piston

Weight, lbs. **Die number, 2045-N**
Former die number, (3-114)

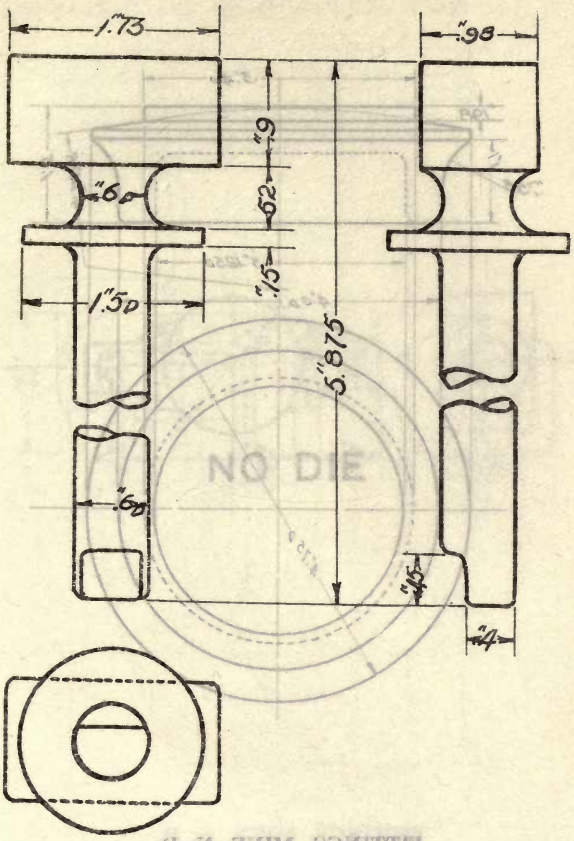

FITTINGS, MINE, N. D.

Plunger

Weight (brass), 0.75 lb. **Die number, 2046-N**
Former die number, (3-123)

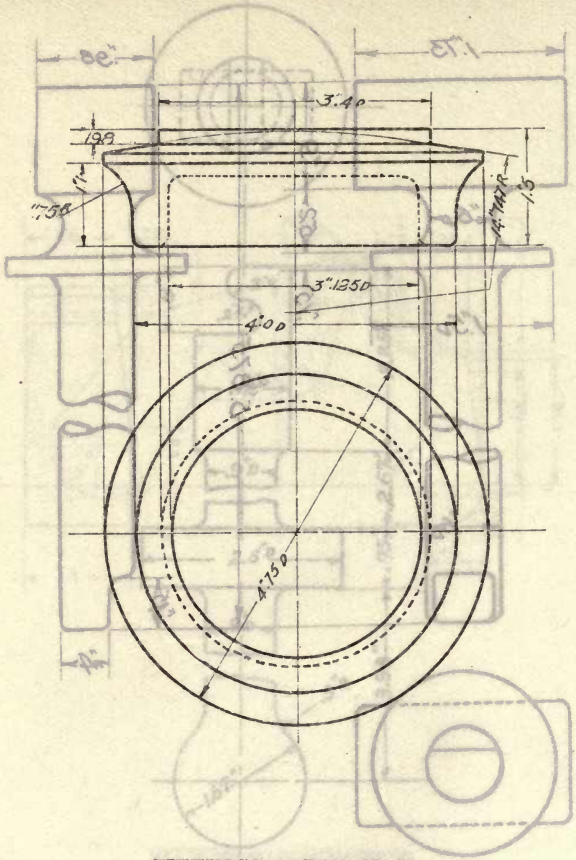

FITTINGS, MINE, N. D.

Seating, firing gear

Weight (steel), 1.3 lbs. Die number, 2047-N
Former die number, (3-131)

NO DIE

Die number, 2048

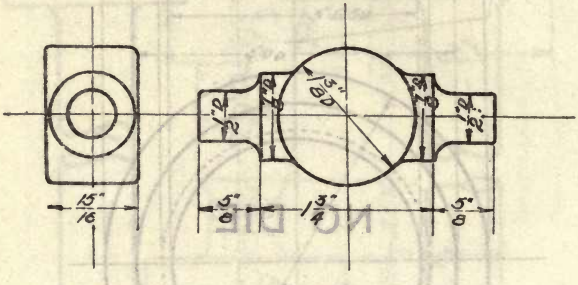

FITTINGS, MINE, N. D.

Yoke

Weight (steel), 0.25 lb. **Die number, 2049-N**
Former die number, (3-127)

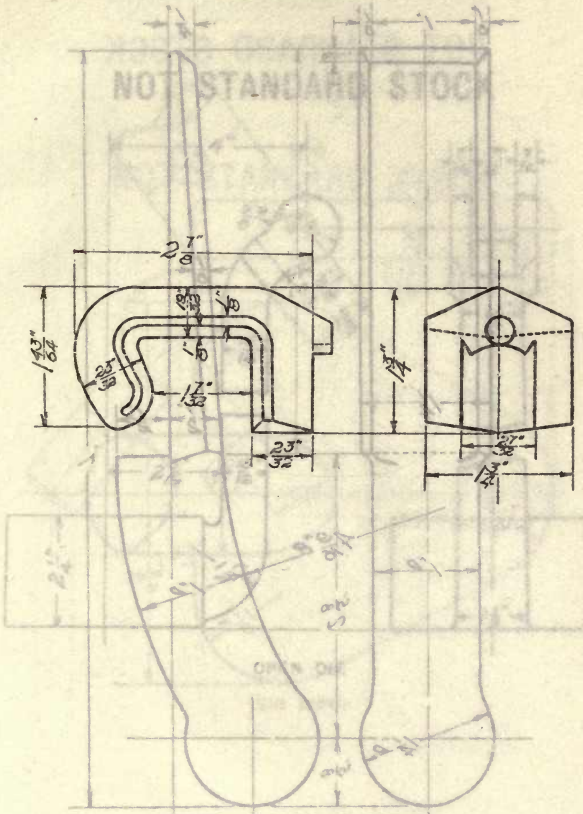

CLAMP, CASE, MINE

Weight (steel), 0.75 lb. **Die number, 2050-N**
Former die number, (3-77)

NOT STANDARD STOCK

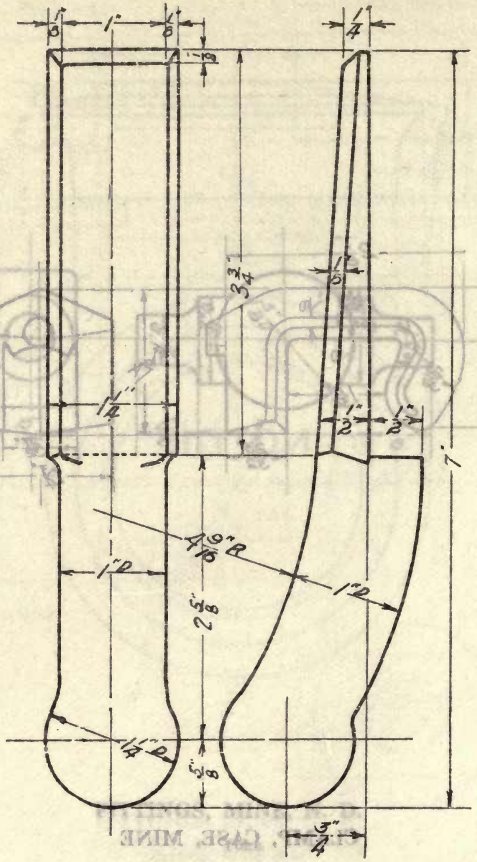

FOOT, LOCKER

Weight (steel), 1.3 lbs. **Die number, 2051-B**
Former die number, (69)

NOT STANDARD STOCK

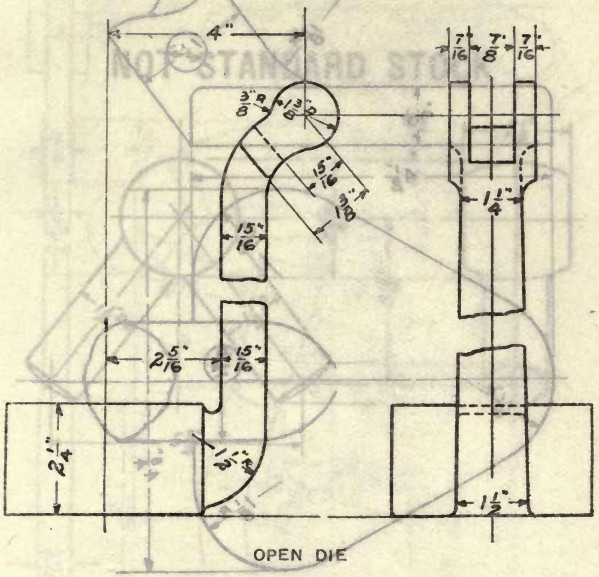

FULCRUM, PUMP, 2 1/2″

Weight, lbs.

Die number, 2052-Y.
Former die number, (99)

NOT STANDARD STOCK

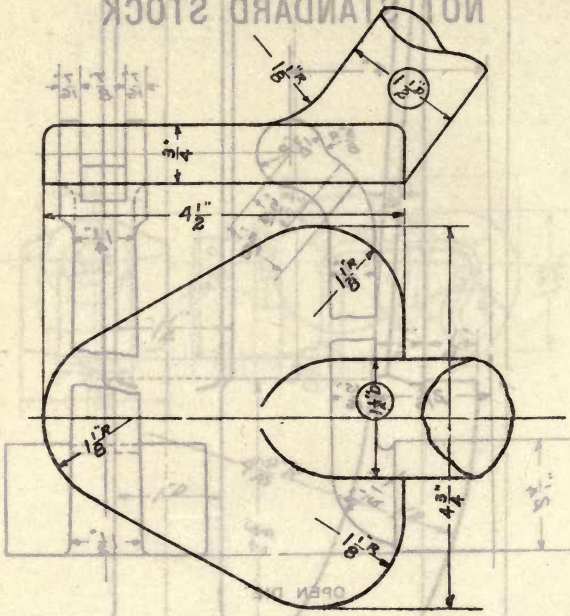

GRAB ROD PAD, 1 1/2″

Weight, lbs. **Die number, 2053-YM**
Former die number, (273)

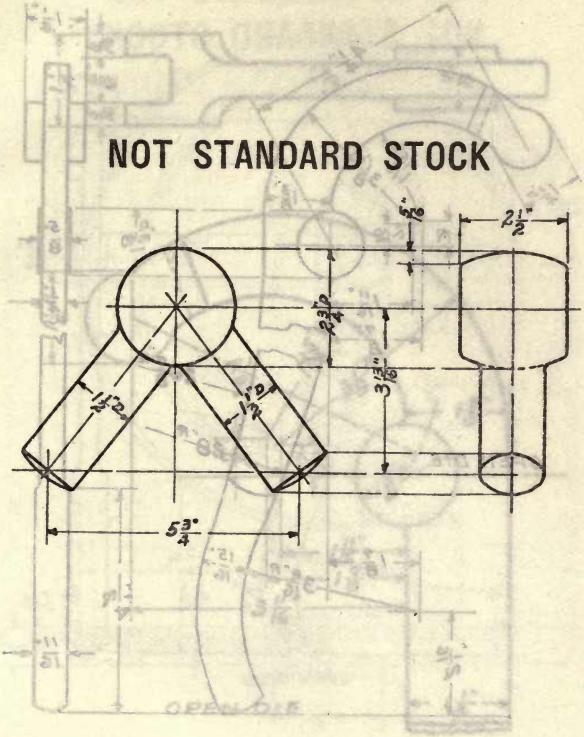

GRAB ROD SUPPORT, 1 1/2″

Weight (steel), 7.69 lbs. **Die number, 2054-Y**
Former die number, (200)

NOT STANDARD STOCK

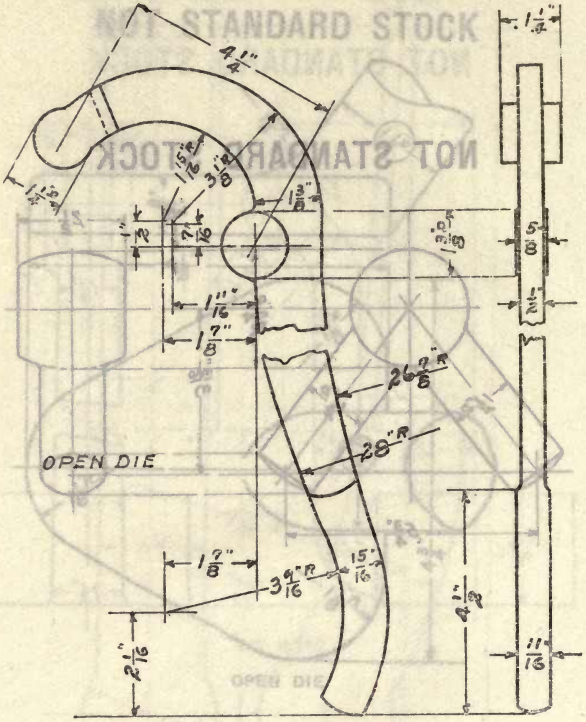

HANDLE, PUMP, 2 1/2″

Weight, lbs. **Die number, 2055-Y**
Former die number, (109)

NOT STANDARD STOCK

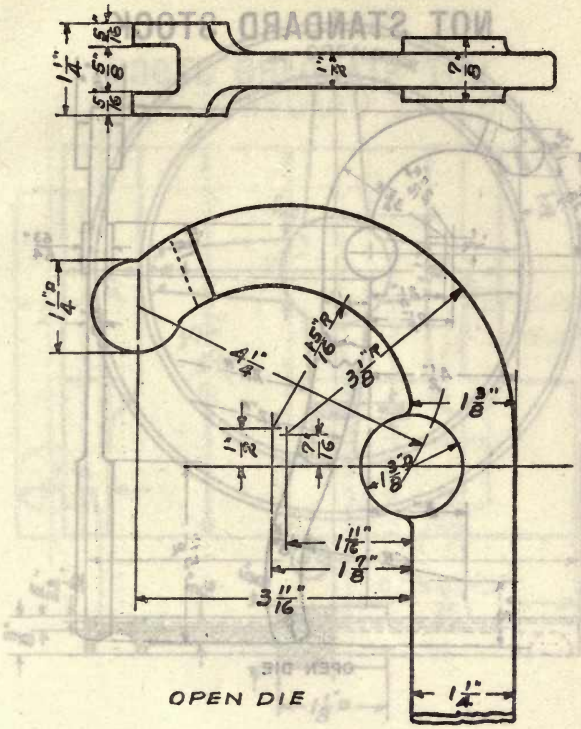

HANDLE, PUMP, 2 1/2", HEAD

Weight, **lbs.** **Die number, 2056-M**
Former die number, (427)

NOT STANDARD STOCK

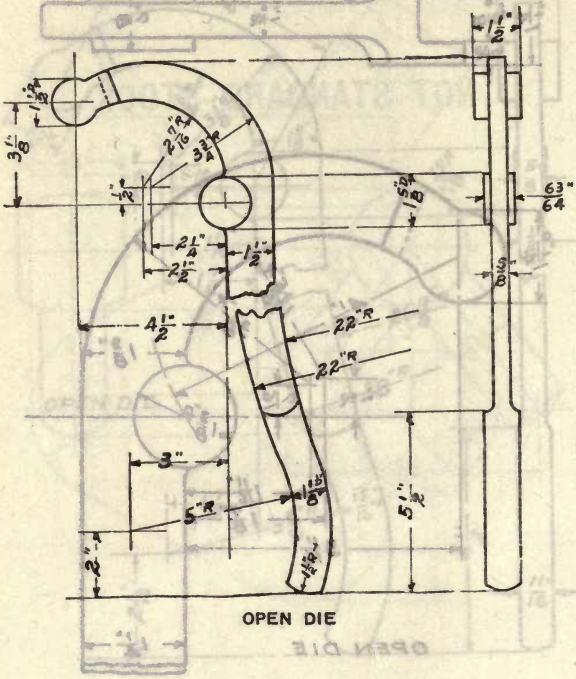

HANDLE, PUMP, 3″

Weight, lbs. **Die number, 2057-Y**
Former die number, (107)

NOT STANDARD STOCK

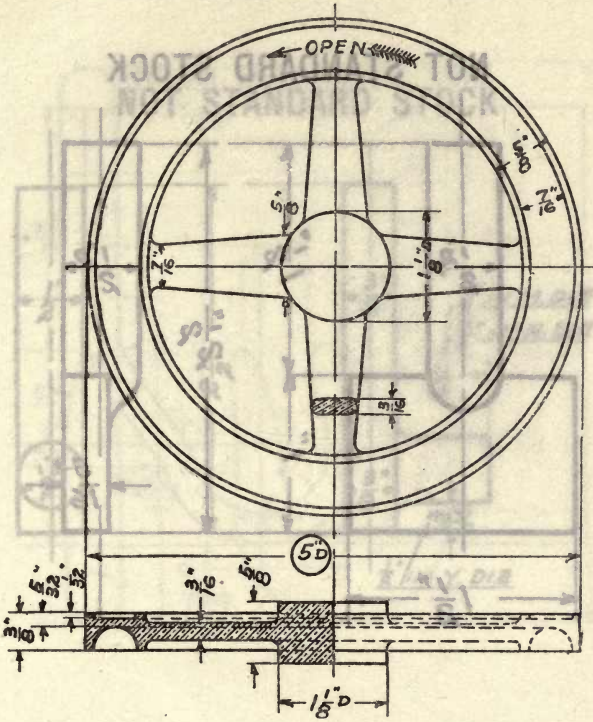

HANDWHEEL, 5″

Weight (brass), 1.0 lb. **Die number, 2058-Y**
Former die number, (388)

NOT STANDARD STOCK

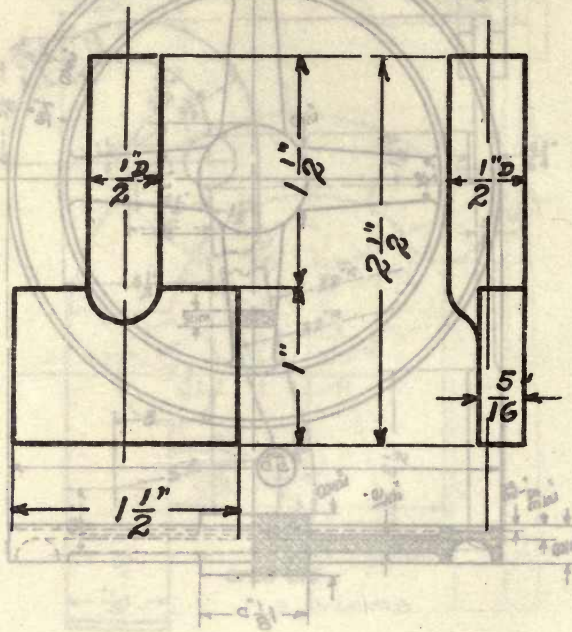

HANGER, LOCKER, MESS, WIRE

Weight (steel), 0.22 lb. Die number, 2059-MNBY
Former die numbers, (3-6) (3-6) (28) (120)

NOT STANDARD STOCK

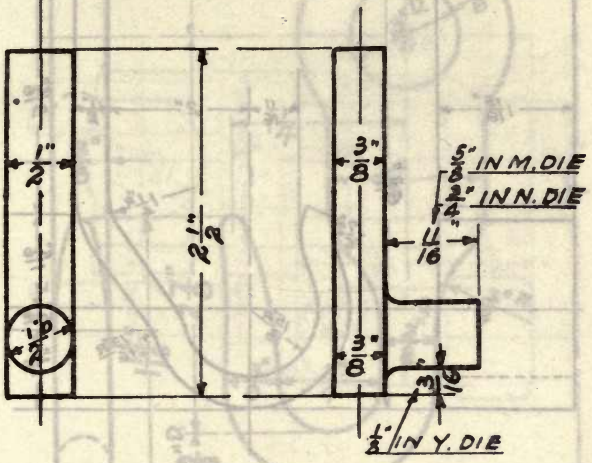

HANGER, LOCKER, MESS, WIRE

Weight (steel), 0.19 lb. **Die number, 2060-MNBY**
Former die numbers, (3-7) (3-7) (26) (93)

NOT STANDARD STOCK

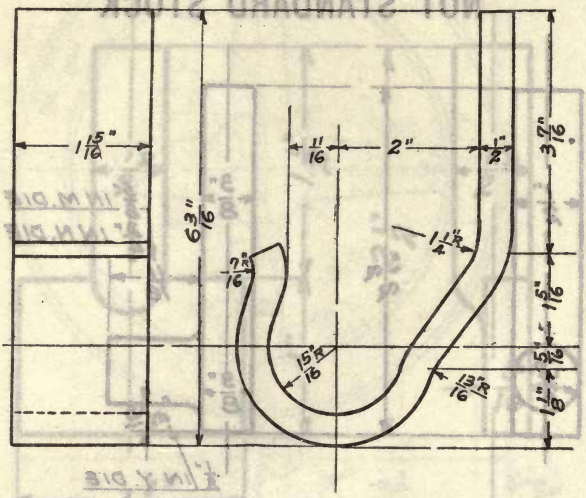

HOOK, HINGE

For folding berth

Weight, lbs. **Die number, 2061-B**
Former die number, (335)

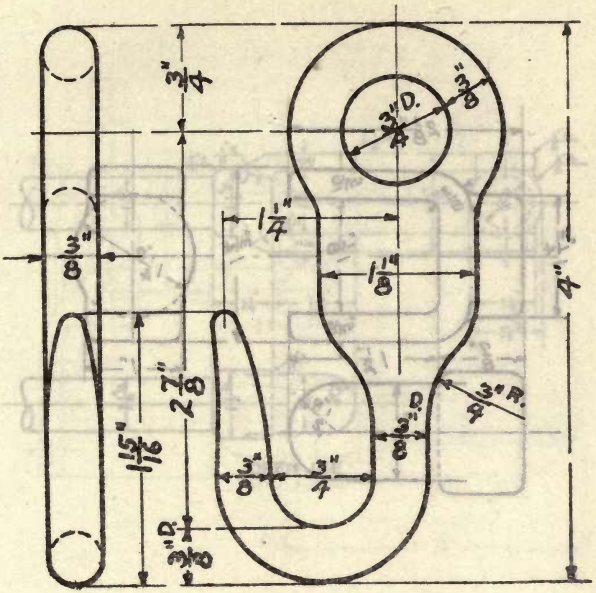

HOOK, TRAVELER, MAST

Weight, lbs. **Die number, 2062-PM**
Former die number, (248)

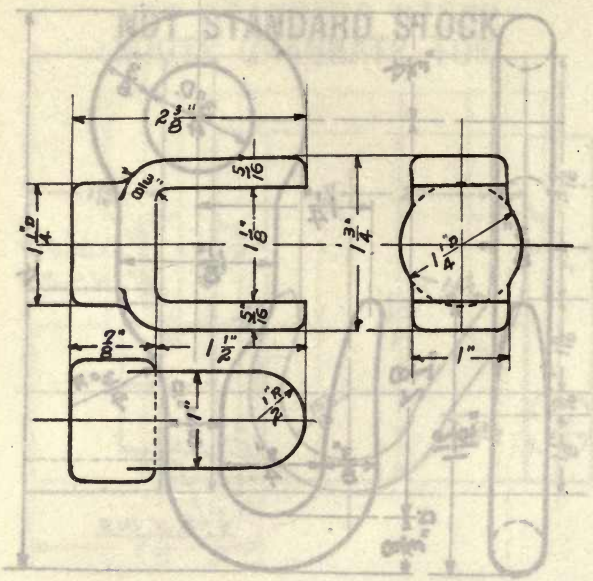

JOINT, UNIVERSAL, 5/8″

Weight (steel), 0.66 lb. **Die number, 2063-Y**
Former die number, (489)

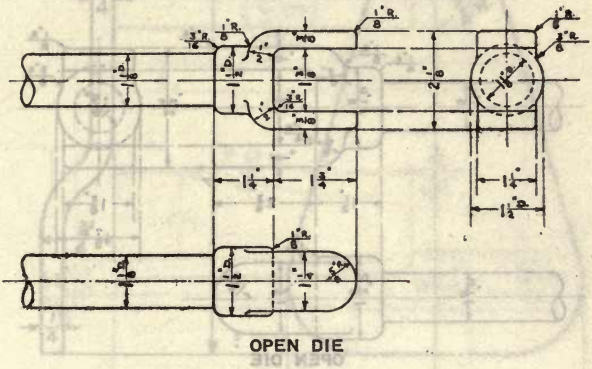

JOINT, UNIVERSAL, 3/4″

Weight (steel), lbs. Die number, 2064-YM
Former die number, (312)

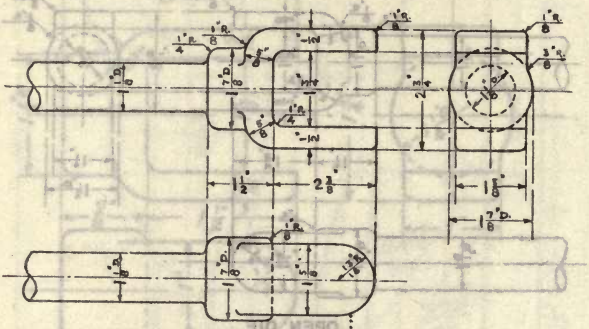

OPEN DIE

JOINT, UNIVERSAL, 7/8″

Weight (steel), lbs. **Die number, 2065-YM**
Former die number, (313)

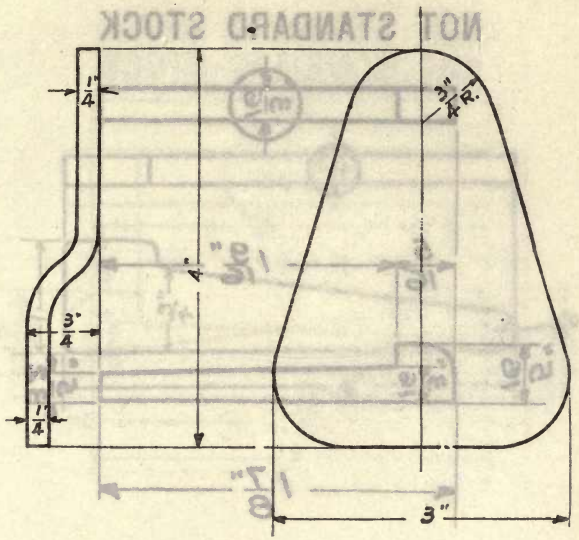

KEEPER, TUB, GALLEY

Weight (steel), 1.0 lb. **Die number, 2066-N**
Former die number, (3-97)

NOT STANDARD STOCK

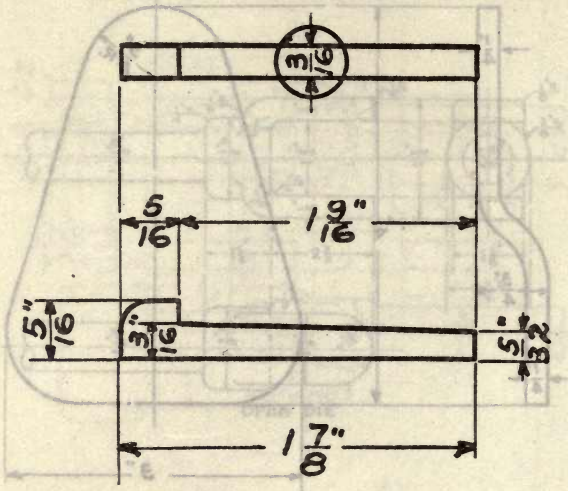

KEY, 3/16″

Weight, lbs. Die number, 2067-Y
Former die number, (1055)

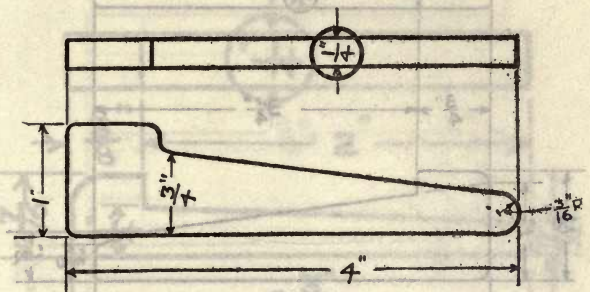

KEY, 1/4″

Weight, lbs. Die number, 2068-Y
Former die number, (167)

NOT STANDARD STOCK

NOT STANDARD STOCK

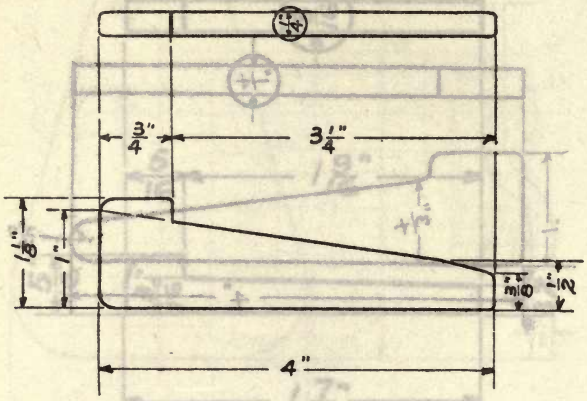

KEY, 1/4"

Weight, lbs. Die number, 2069-M
Former die number, (3-39)

NOT STANDARD STOCK

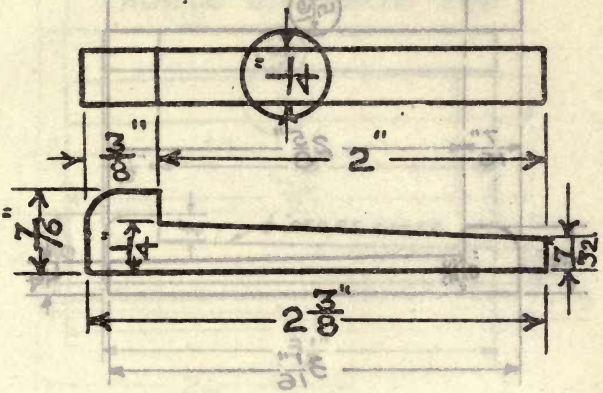

KEY, 1/4"

Weight, lbs. Die number, 2070-Y
Former die number, (1055)

NOT STANDARD STOCK

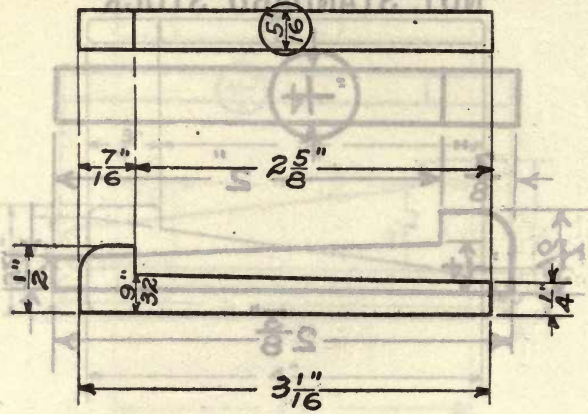

KEY, 5/16″

Weight, lbs. Die number, 2071-X
Former die number, (1053)

NOT STANDARD STOCK

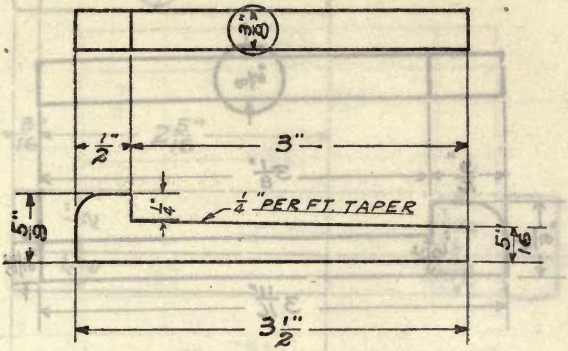

KEY, 3/8″

Weight (steel), 0.15 lb. Die number, 2072-N
Former die number, (3-52)

NOT STANDARD STOCK

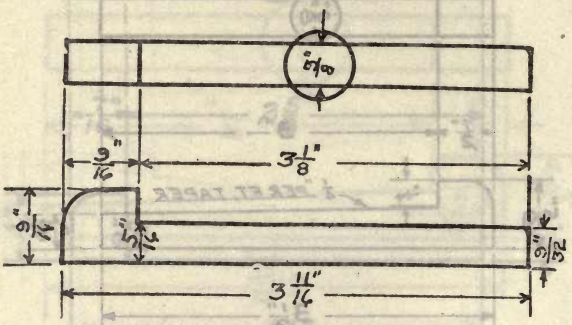

KEY, 3/8″

Weight, lbs. Die number, 2073-Y
Former die number, (1056)

NOT STANDARD STOCK

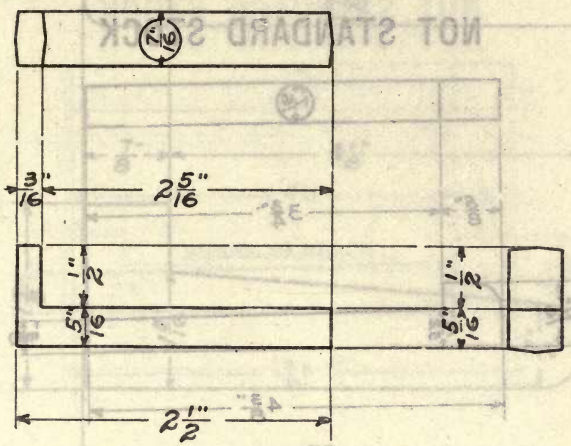

KEY, 7/16″

Weight, lbs. **Die number, 2074-B**
Former die number, (257)

NOT STANDARD STOCK

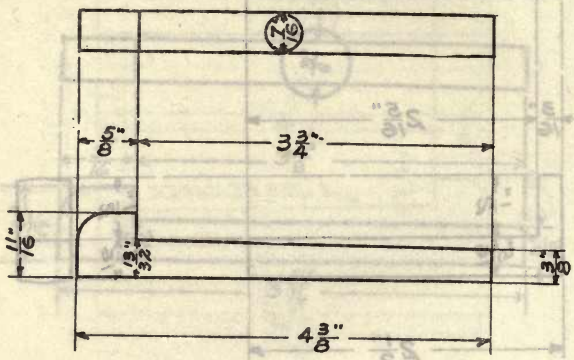

KEY, 7/16″

Weight, **lbs.** **Die number, 2075-Y**
Former die number, (1056)

NOT STANDARD STOCK

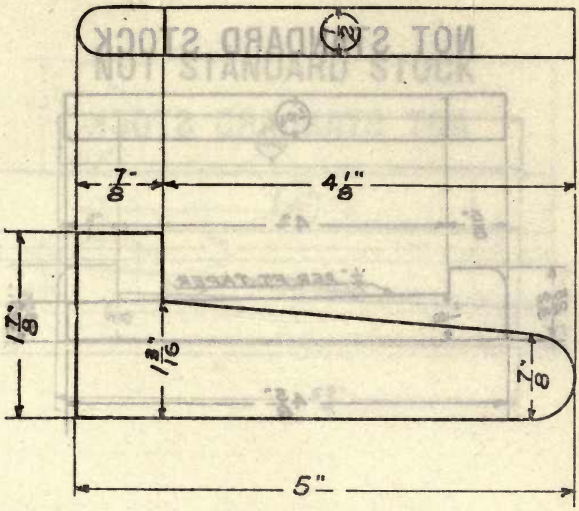

KEY, 1/2″

Weight (steel), 0.88 lb. **Die number, 2076-Y**
Former die number, (166)

NOT STANDARD STOCK

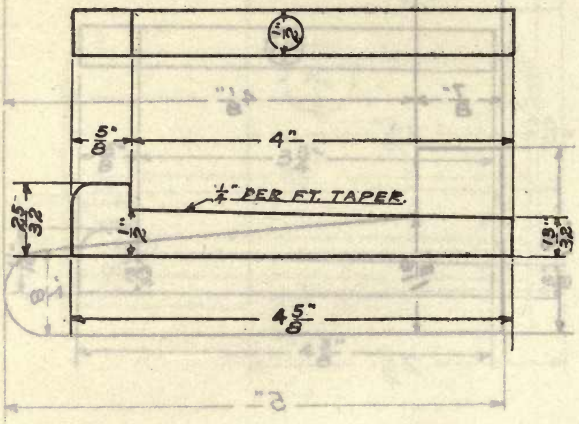

KEY, 1/2″

Weight (steel), 0.29 lb.

Die number, 2077-N
Former die number, (3-53)

NOT STANDARD STOCK

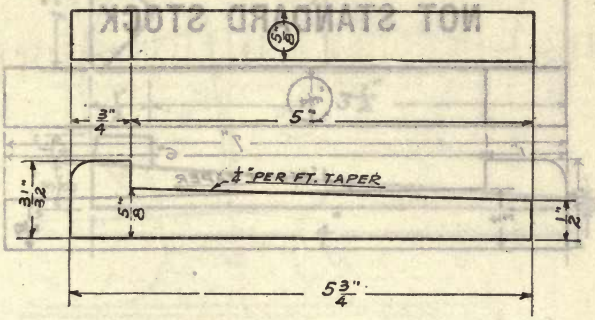

KEY, 5/8″

Weight (steel), 0.65 lb. Die number, 2078-N
Former die number, (3-54)

NOT STANDARD STOCK

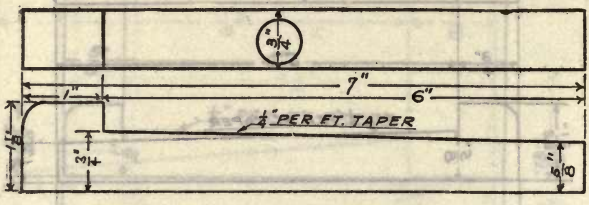

KEY, 3/4″

Weight (steel), 0.85 lb. Die number, 2079-N
Former die number, (3-55)

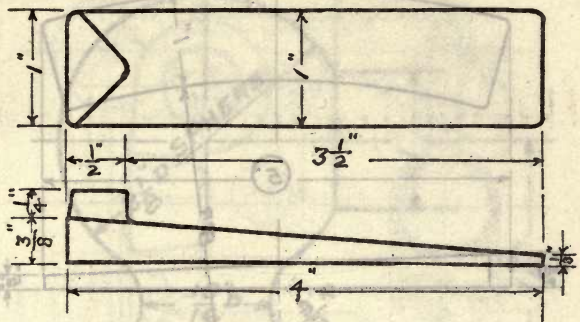

WEDGE, STRAIGHT

For W. T. Doors

Weight, **lbs.** **Die number, 2080-Y**
Former die number, (14)

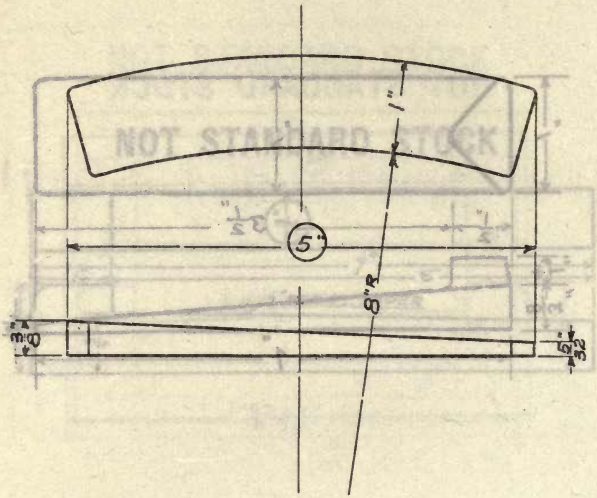

WEDGE, CURVED, 5″

Weight (steel), 0.38 lb. **Die number, 2081-Y**
Former die number, (15)

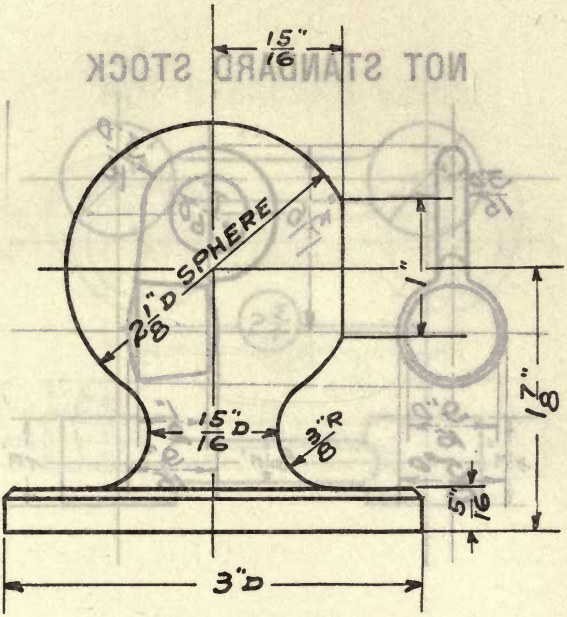

KNOB, RAIL, HAND

Weight, lbs. **Die number, 2082-Y**
Former die number, (1021)

NOT STANDARD STOCK

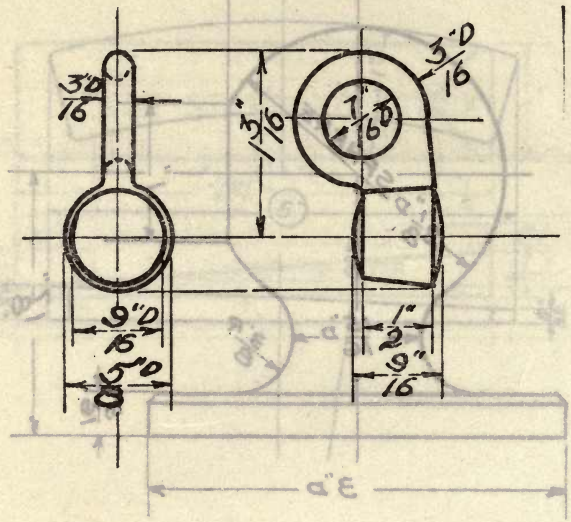

LATCH, HASP

Weight (steel), 0.19 lb. **Die number, 2083-Y**
Former die number, (509)

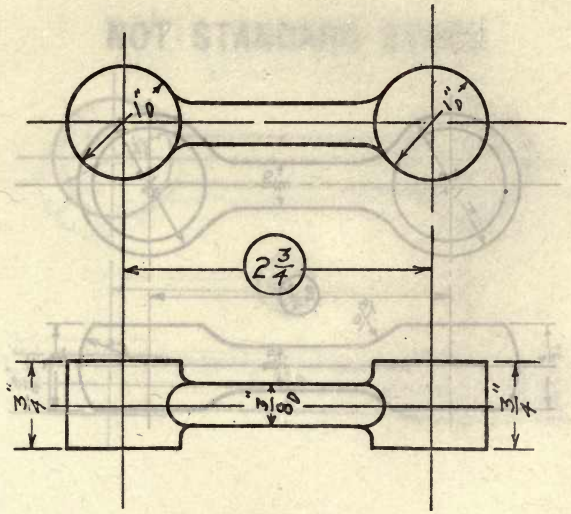

LINK, 2 3/4″

Weight (steel), 0.50 lb. **Die number, 2084-Y**
Former die number, (1000)

NOT STANDARD STOCK

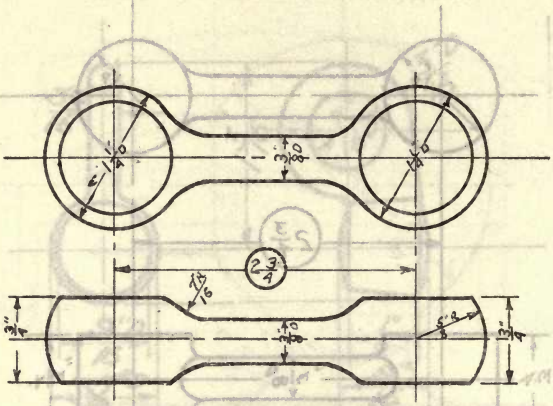

LINK, 2 3/4″

Weight, lbs. Die number, 2085-MY
Former die numbers, (7-44) (1100)

NOT STANDARD STOCK

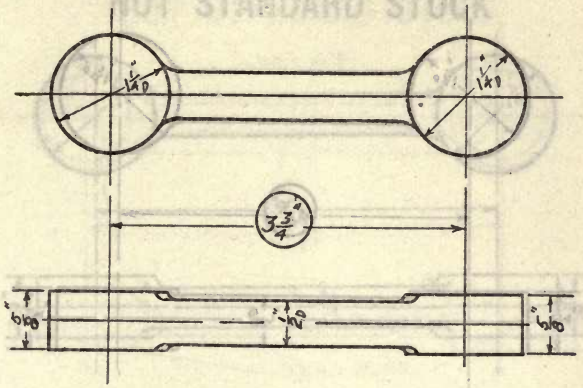

LINK, 3 3/4″

For 2 1/2″ lift and force pumps

Weight (steel), 0.56 lb. **Die number, 2086-Y**
Former die number, (177)

NOT STANDARD STOCK

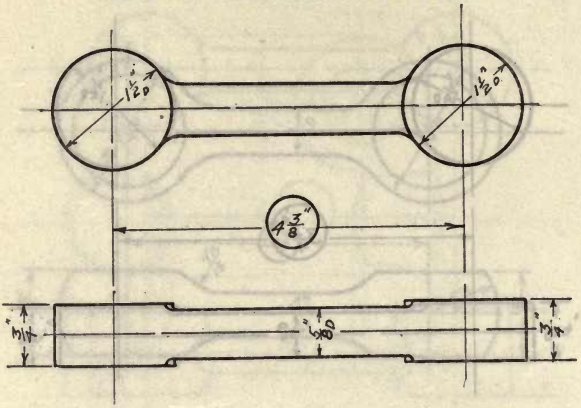

LINK, 4 3/8″

For 3″ and 3 1/2″ lift and force pumps

Weight (steel), 0.94 lb. **Die number, 2087-Y**
Former die number, (179)

NOT STANDARD STOCK

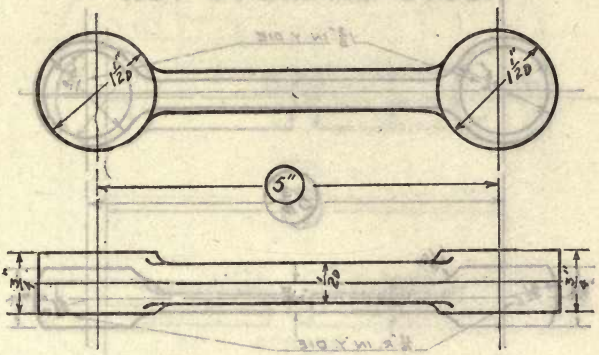

LINK, 5″

For 3″ lift and force pumps

Weight (steel), 0.97 lb. **Die number, 2088-Y**
Former die number, (176)

NOT STANDARD STOCK

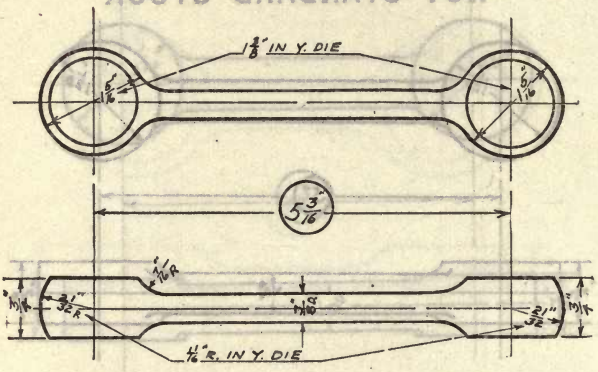

LINK, 5 3/16″

Weight (steel), 1.0 lb. **Die number, 2089-MY**
Former die numbers, (7-65) (1004)

NOT STANDARD STOCK

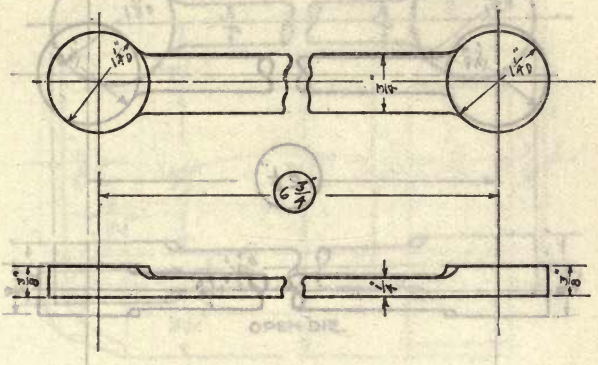

LINK, 6 3/4″

For plumbers' force pumps

Weight (steel), 0.56 lb. **Die number, 2090-Y**
Former die number, (181)

NOT STANDARD STOCK

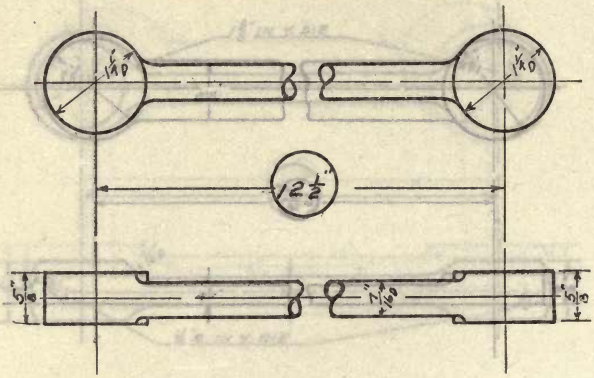

LINK, 12 1/2″

For 2 1/2″ lift pump

Weight (steel), 1.9 lbs. **Die number, 2091-Y**
Former die number, (180)

NOT STANDARD STOCK

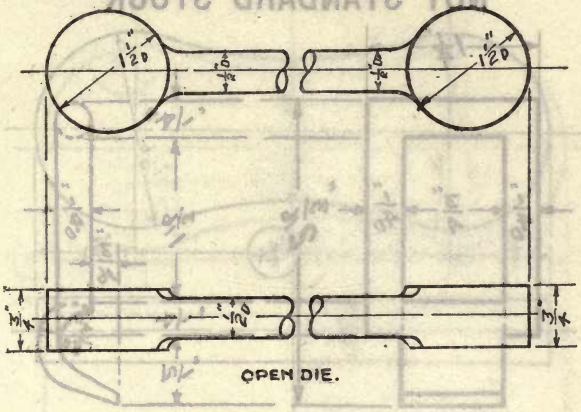

LINK

For 3" lift pump

Weight (steel), 2.3 lbs. **Die number, 2092-Y**
Former die number, (178)

NOT STANDARD STOCK

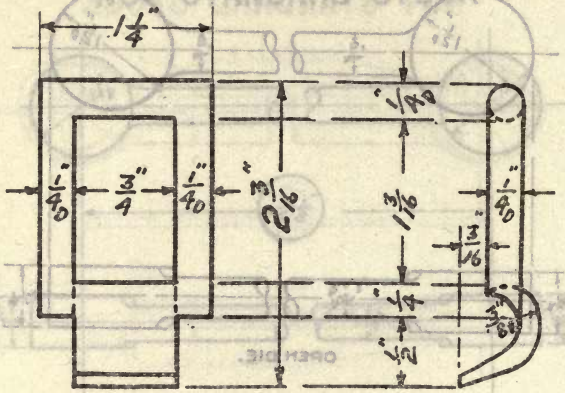

LINK, CHAIN, ENDLESS

Weight (steel), 0.09 lb. **Die number, 2093-Y**
Former die number, (175)

NOT STANDARD STOCK

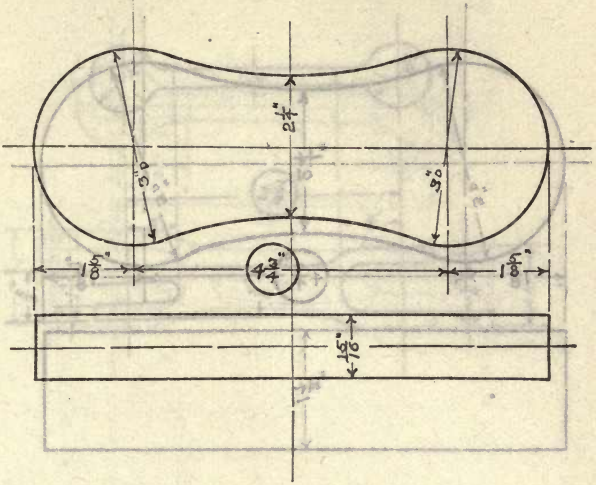

LINK, CHAIN, SPROCKET, 4 3/4″

Weight (steel), 5.0 lbs. **Die number, 2094-Y**
Former die number, (183)

NOT STANDARD STOCK

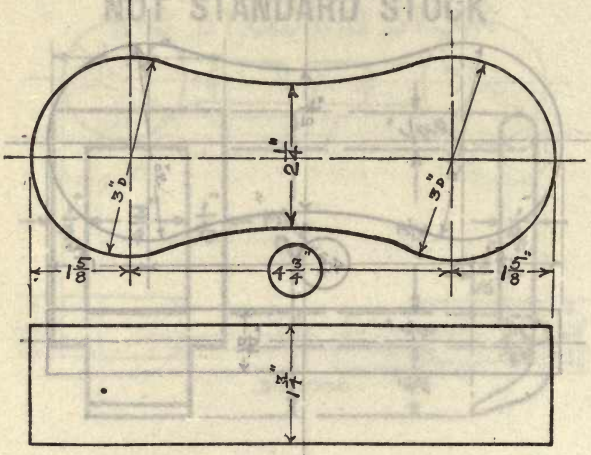

LINK, CHAIN, SPROCKET, 4 3/4"

Weight (steel), 9.3 lbs. **Die number, 2095-Y**
Former die number, (182)

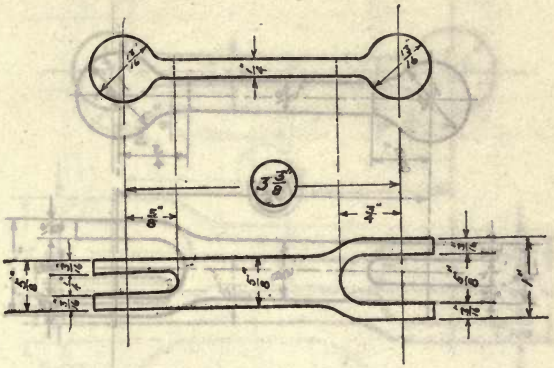

LINK, FULCRUM, VALVE, THROTTLE, 3 3/8″

For steamer engine, type "B"

Weight (steel), 0.44 lb. Die number, 2096-Y
Former die number, (1008)

NOT STANDARD STOCK

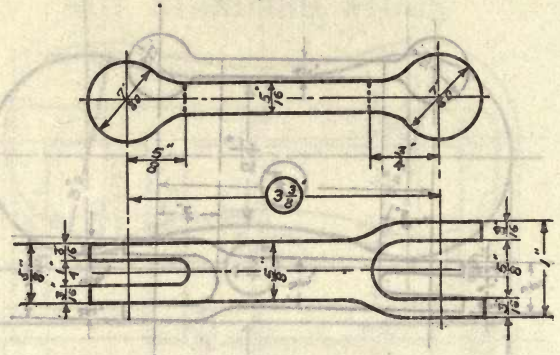

LINK, FULCRUM, VALVE, THROTTLE, 3 3/8″

For steamer engine, type "L"

Weight, ____ lbs. Die number, 2097-MY
Former die numbers, (7-24) (1113)

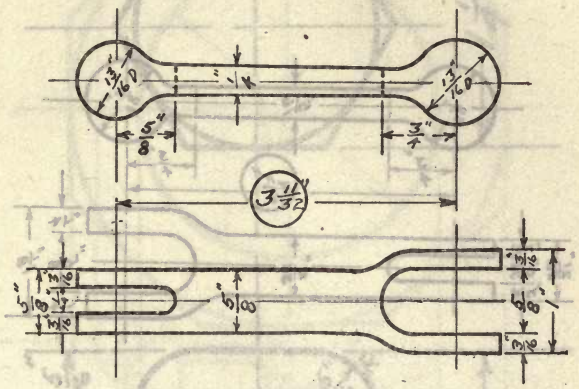

LINK, FULCRUM, VALVE, THROTTLE, 3 11/32″

For steamer engine, type "K"

Weight, ____ lbs. Die number, 2098-MY
Former die numbers, (7-4) (1112)

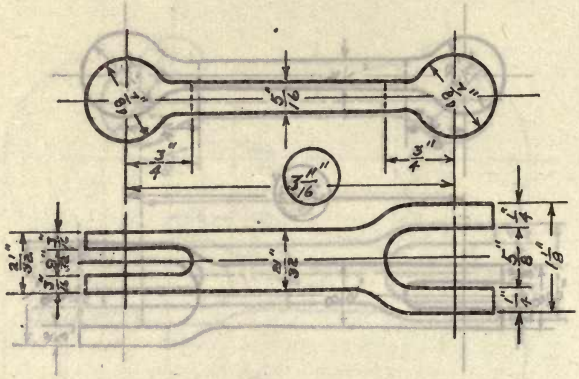

LINK, FULCRUM, VALVE, THROTTLE, 3 11/16"

For steamer engine, type "M"

Weight, lbs. **Die number, 2099-M**
Former die number, (7-60)

NOT STANDARD STOCK

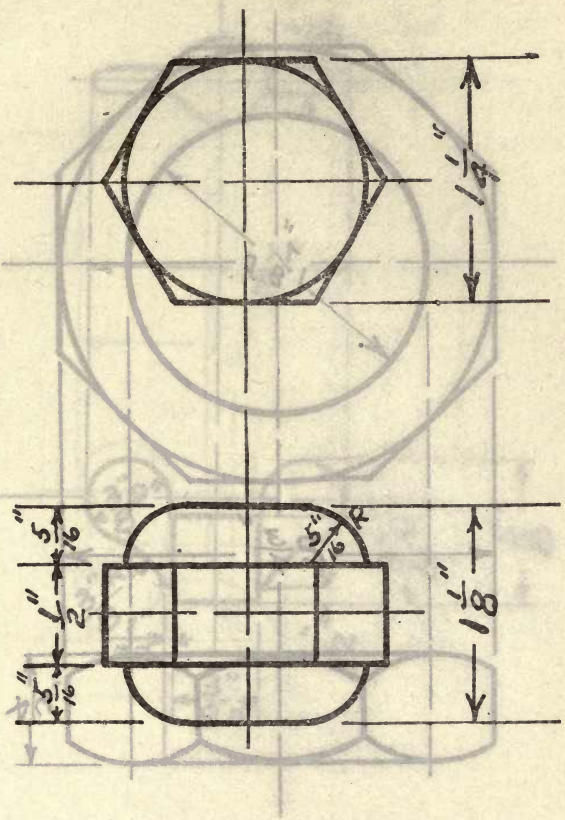

NUT, HEXAGONAL, 3/4″

Weight (steel), 0.38 lb. **Die number, 2100-Y**
Former die number, (284)

NOT STANDARD STOCK

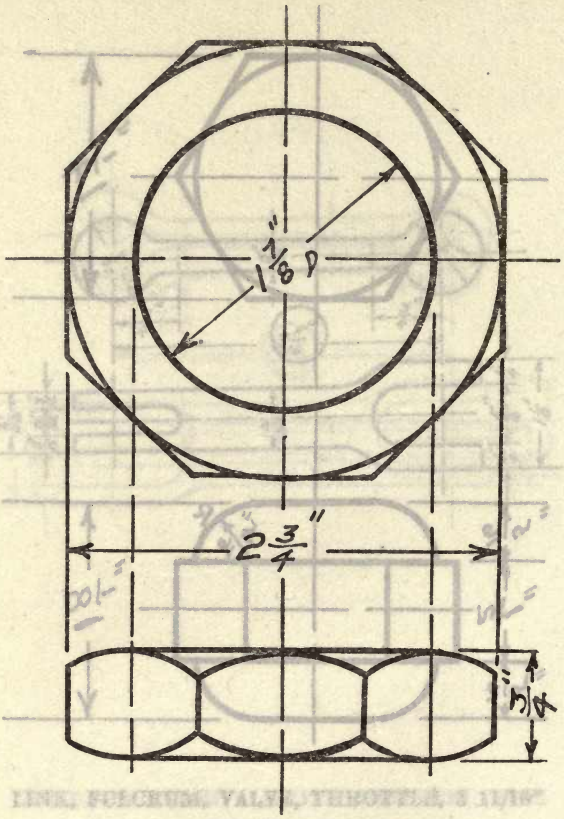

NUT, OCTAGONAL, 2 1/8″

Weight (steel), 0.81 lb. **Die number, 2101-YM**
Former die number, (479)

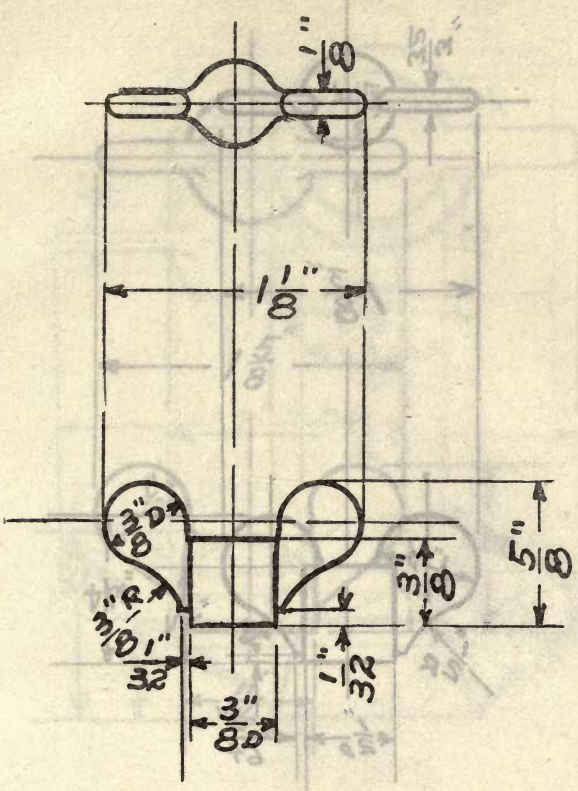

NUT, WING, 3/16″

Weight, lbs. **Die number, 2102-Y**
Former die number, (309)

NOT STANDARD STOCK

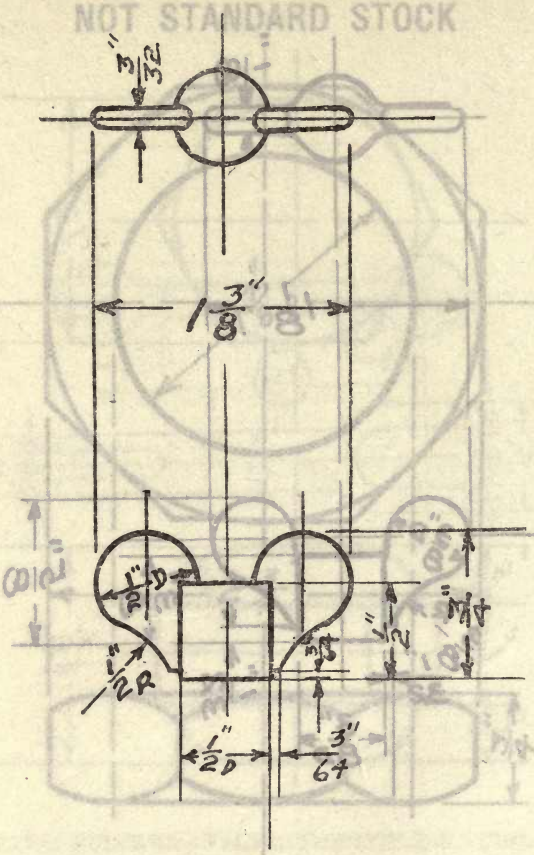

NUT, WING, 1/4″

Weight (steel), 0.06 lb. **Die number, 2103-Y**
Former die number, (308)

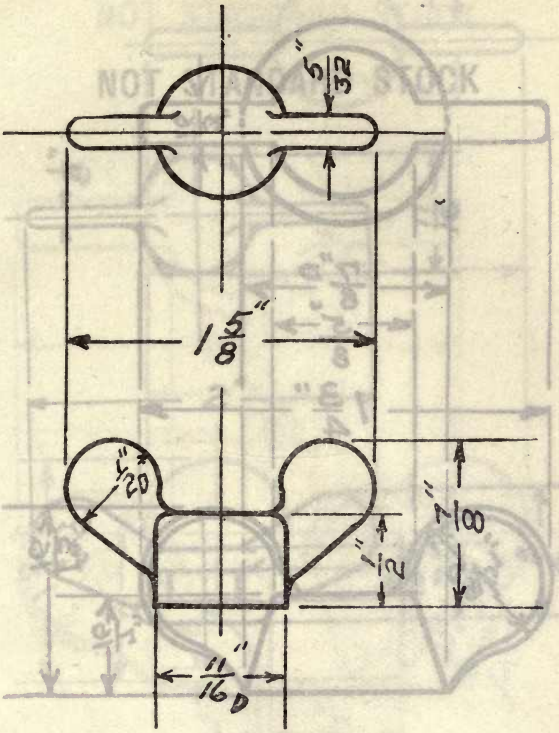

NUT, WING, 5/16″

Weight (steel), 0.13 lb. **Die number, 2104-N**
Former die number, (3-111)

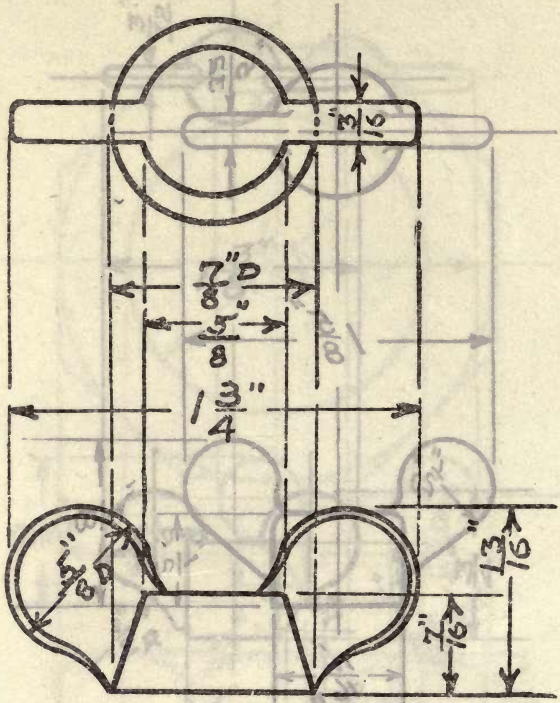

NUT, WING, 3/8″

Weight, lbs. **Die number, 2103-M**
Former die number, (3-62)

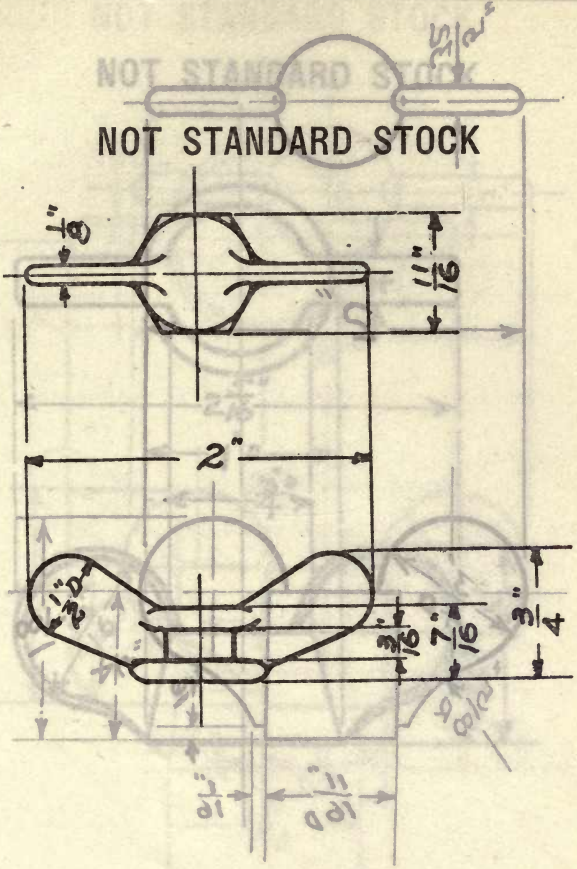

NUT, WING, 7/16″

Weight (steel), 0.19 lb. **Die number, 2106-N**
Former die number, (3-113)

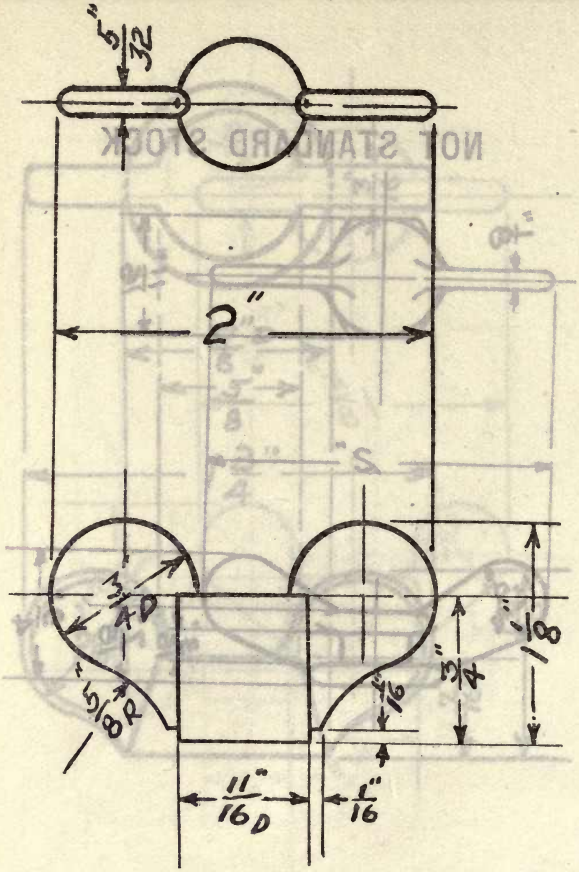

NUT, WING, 7/16″

Weight (steel), 0.12 lb. **Die number, 2107-Y**
Former die number, (306)

NOT STANDARD STOCK

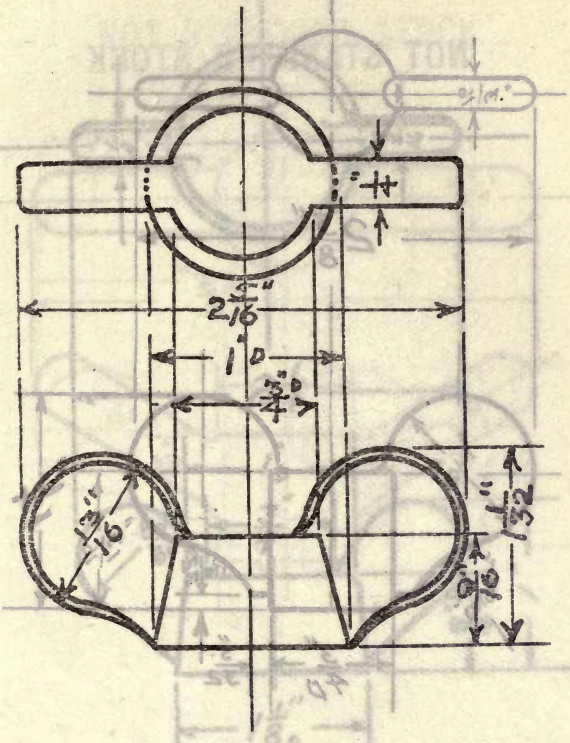

NUT, WING, 1/2"

Weight, lbs. Die number, 2108-M
Former die number, (3-63)

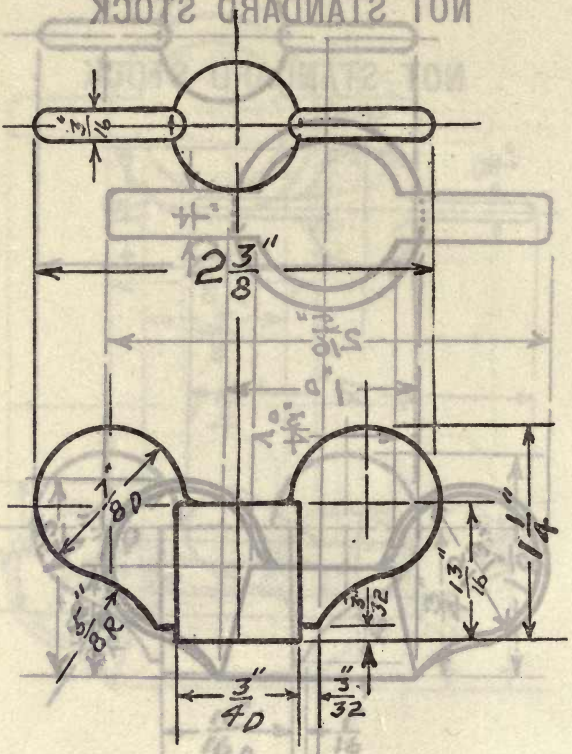

NUT, WING, 1/2″

Weight (steel), 0.19 lb. **Die number, 2109-Y**
Former die number, (305)

NOT STANDARD STOCK

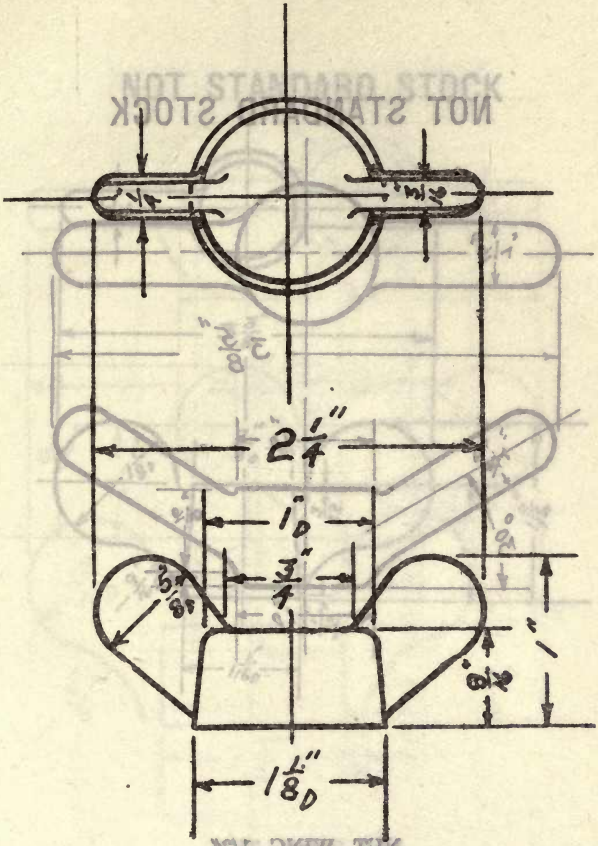

NUT, WING, 1/2″

Weight (steel), 0.25 lb. Die number, 2110-N
Former die number, (3-112)

NOT STANDARD STOCK

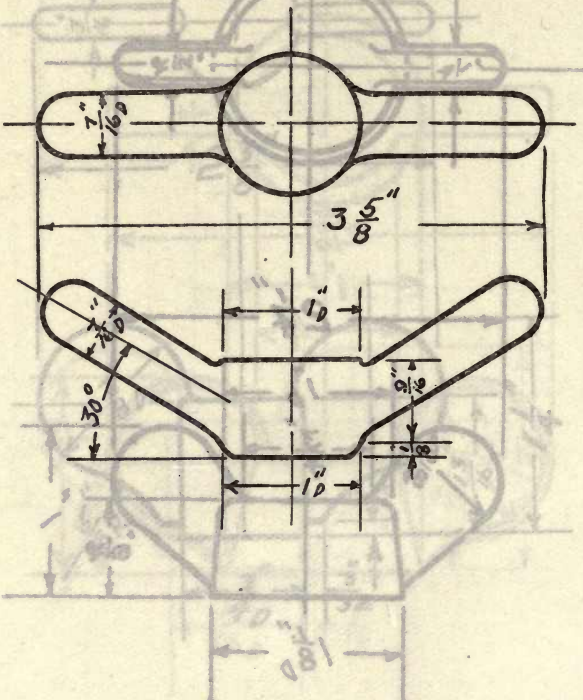

NUT, WING, 1/2″

Weight (steel), 0.25 lb. **Die number 2111-Y**
Former die number, (285)

NOT STANDARD STOCK

NOT STANDARD STOCK

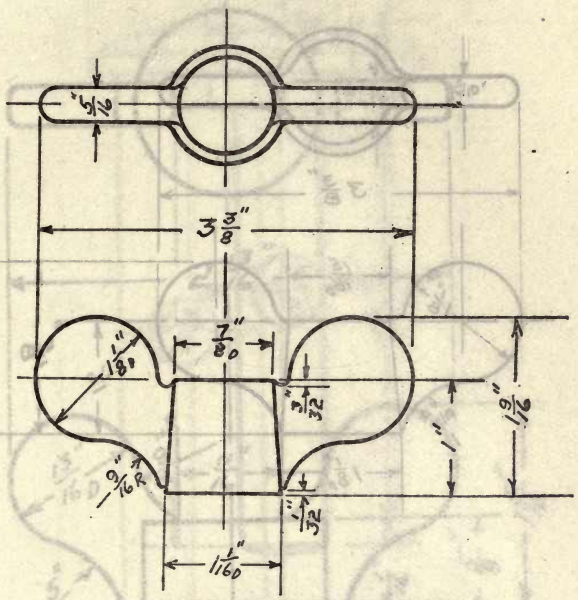

NUT, WING, 5/8″

Weight, lbs. Die number, 2112-NM
Former die numbers, (3-72) (12-7)

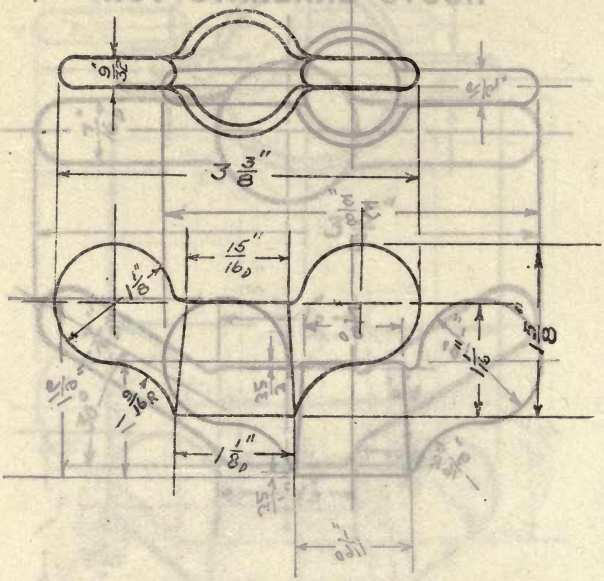

NUT, WING, 5/8″

Weight (steel), 0.47 lb. Die number, 2113-Y
Former die number, (1054)

NOT STANDARD STOCK

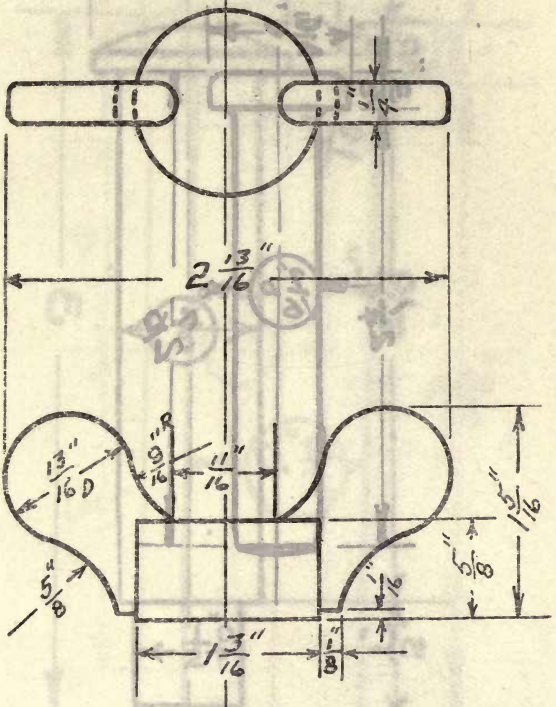

NUT, WING, 11/16″

Weight, lbs. **Die number, 2114-Y**
Former die number, (307)

NOT STANDARD STOCK

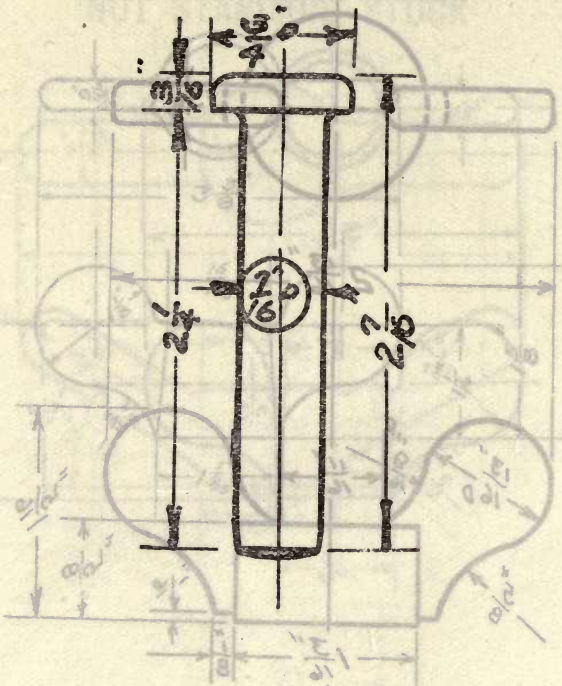

PIN, 7/16″

Weight (steel), 0.12 lb. **Die number, 2115-Y**
Former die number, (360-1)

NOT STANDARD STOCK

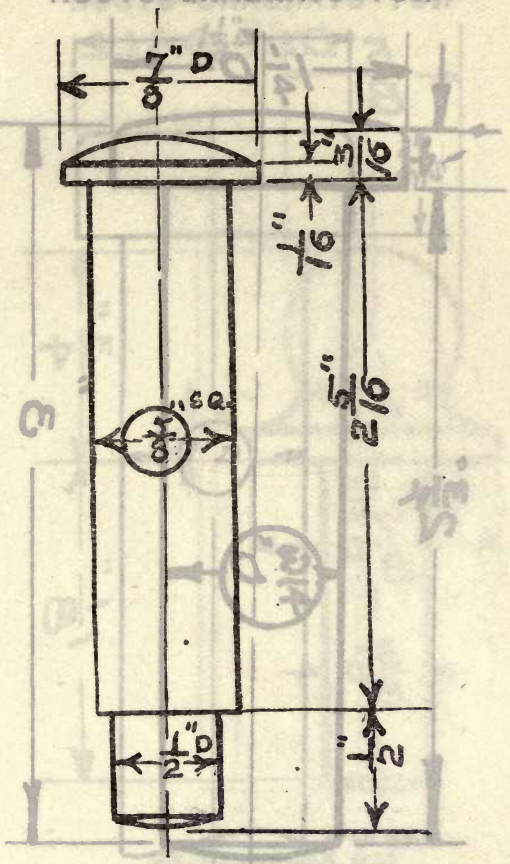

PIN, 5/8″ SQUARE

Weight (steel), 0.31 lb. **Die number, 2116-Y**
Former die number, (418)

NOT STANDARD STOCK

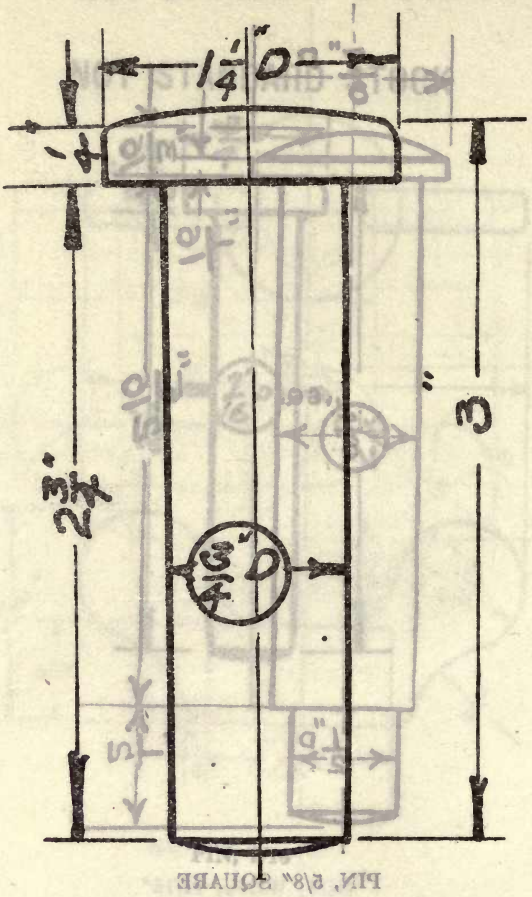

PIN, 3/4″

Weight (steel), 0.47 lb. Die number, 2117-Y
Former die number, (360-2)

NOT STANDARD STOCK

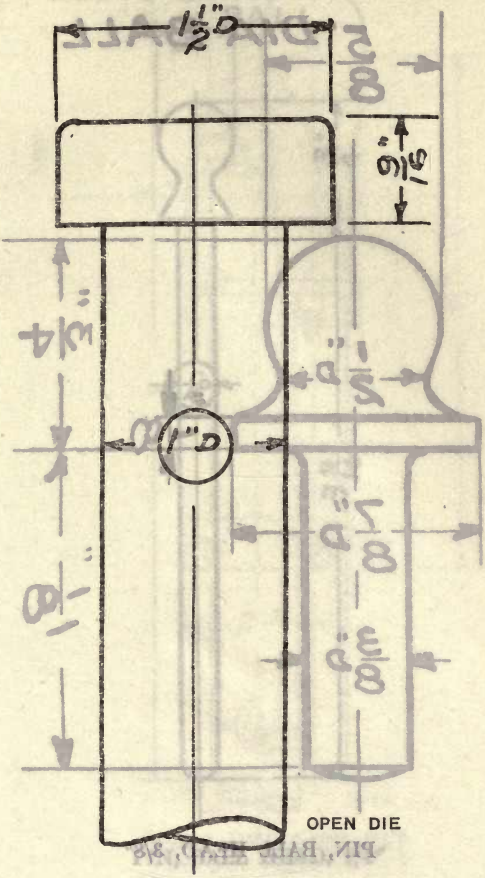

PIN, 1″

Weight, lbs.

Die number, 2118-B
Former die number, (152)

NOT STANDARD STOCK

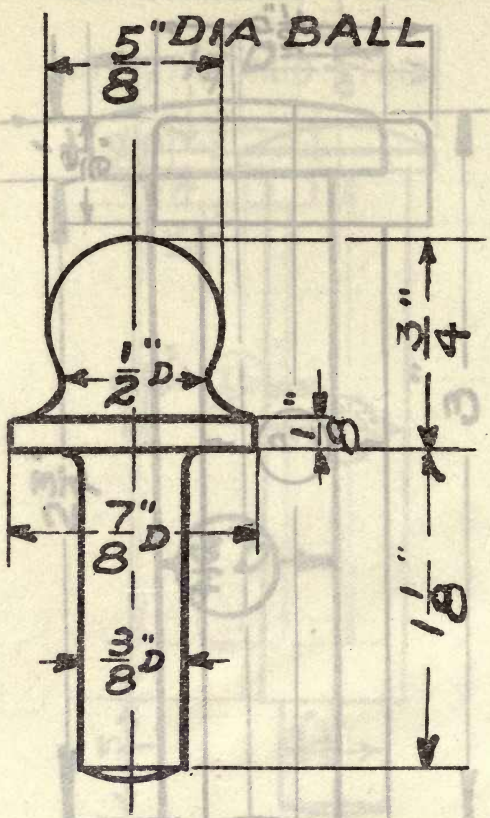

PIN, BALL HEAD, 3/8″

Weight (steel), 0.12 lb. Die number, 2119-Y
Former die number, (9)

NOT STANDARD STOCK

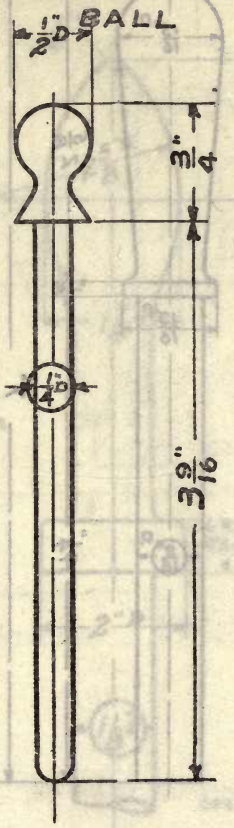

PIN, BALL HEAD, 1/4″

Weight (n. brass), 0.12 lb. **Die number, 2120-Y**
Former die number, (247)

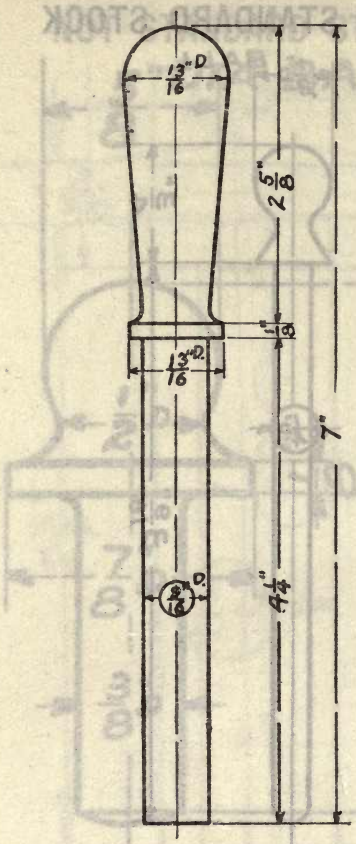

PIN, BELAYING, 9/16″

Weight (steel), 0.66 lb. **Die number, 2121-PM**
Former die number, (399)

NOT STANDARD STOCK

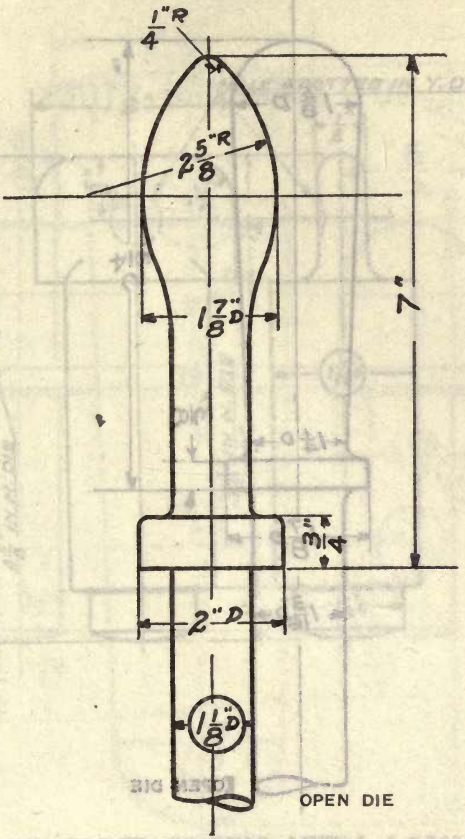

PIN, BELAYING, 1 1/8″

Weight, **lbs.** **Die number, 2122-N**
Former die number, (3-76)

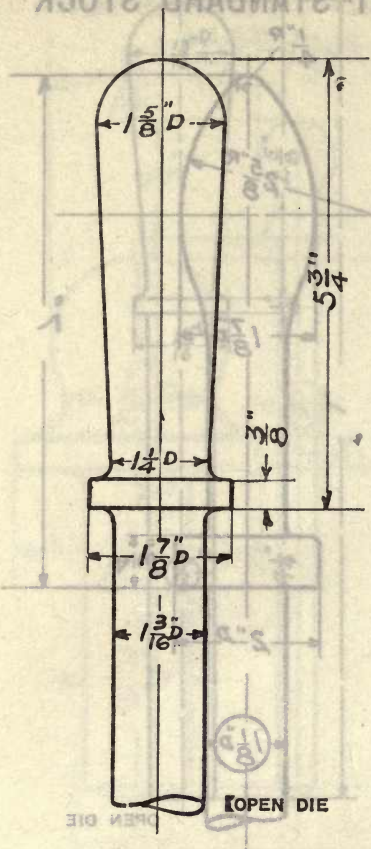

PIN, BELAYING, 1 3/16″

Weight, lbs. **Die number, 2123-Y**
Former die number, (186)

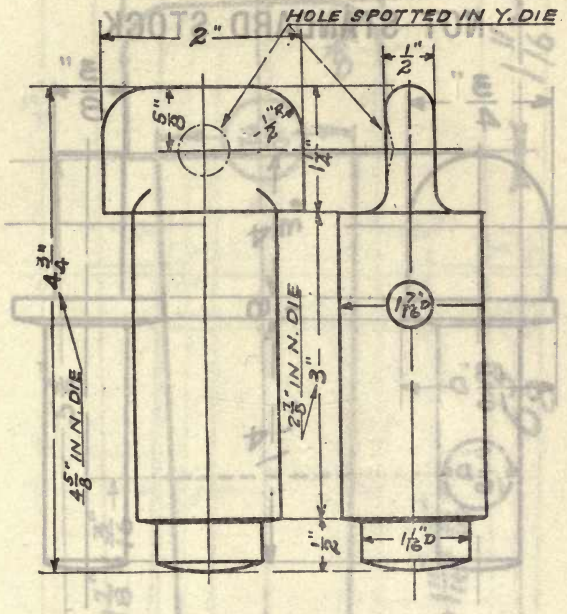

PIN, BLOCK, COALING, METAL, 1 7/16″

Weight (steel), 2.25 lbs. **Die number, 2124-YN**
Former die numbers, (511) (5-147)

NOT STANDARD STOCK

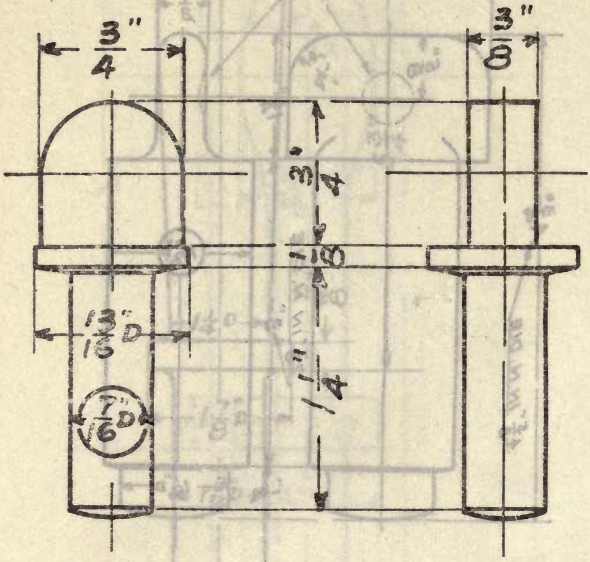

PIN, CANOPY, 7/16″

Weight (steel), 0.16 lb. **Die number, 2125-Y**
Former die number, (10)

NOT STANDARD STOCK

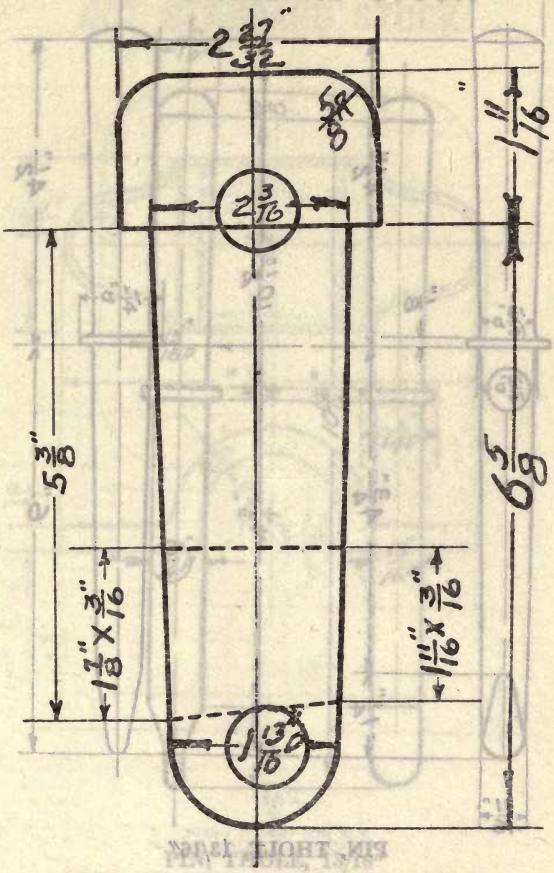

PIN, TAPERED, 1 13/16″ TO 2 3/16″

Weight (steel), 7.0 lbs. **Die number, 2126-Y**
Former die number, (185)

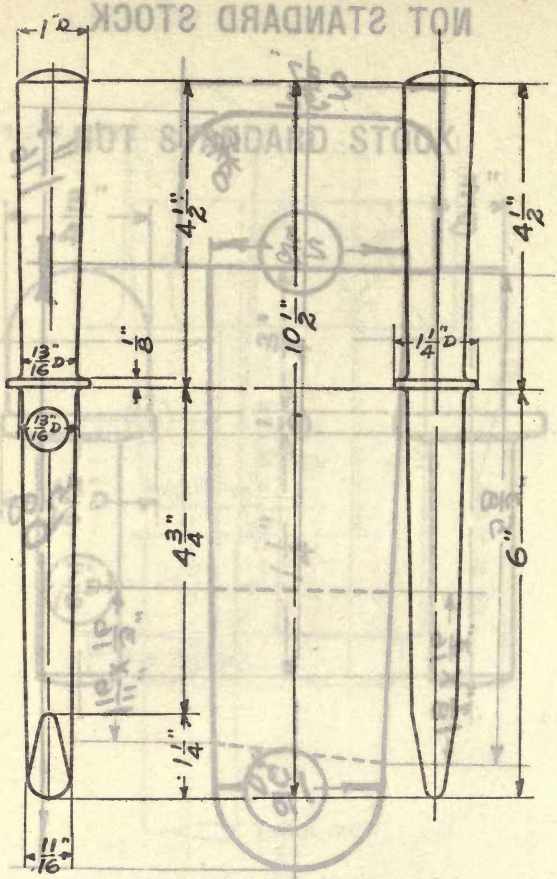

PIN, THOLE, 13/16″

Weight (steel), 1.6 lbs. **Die number, 2127-YM**
Former die numbers, (189) (3-46)

NOT STANDARD STOCK

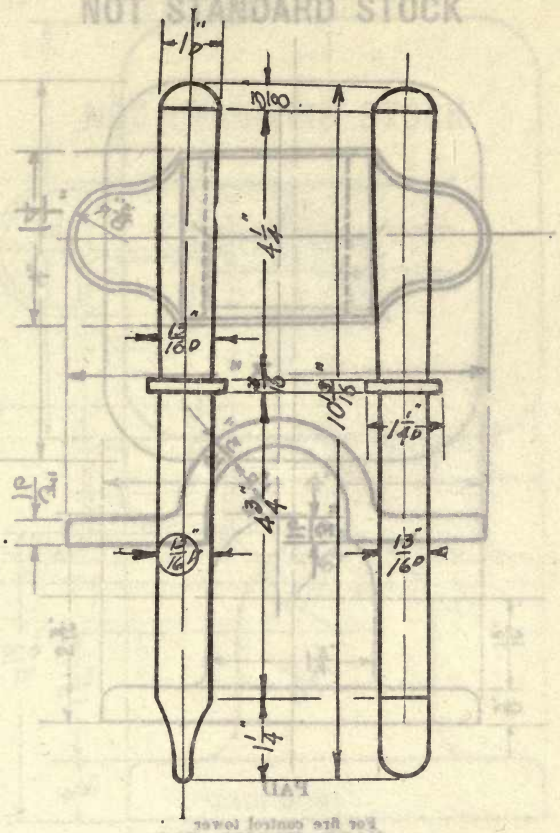

PIN, THOLE, 13/16″

Weight, **lbs.** **Die number, 2128-B**
Former die number, (38)

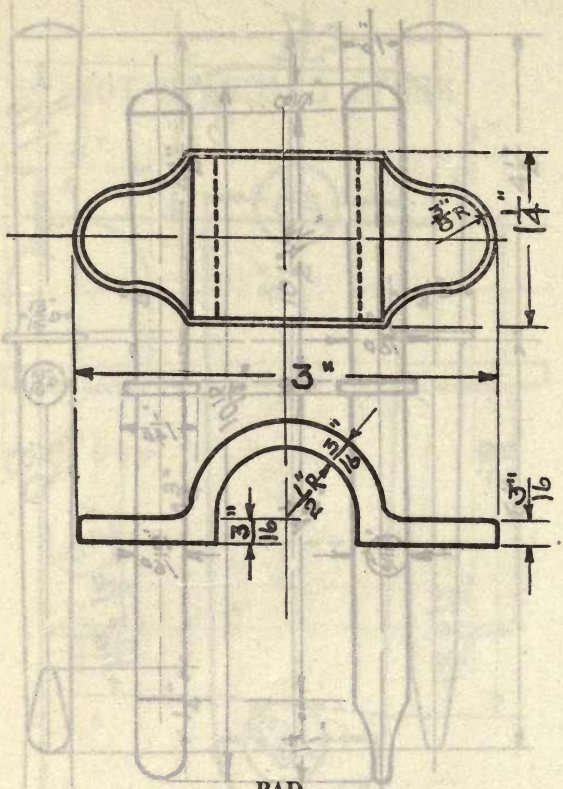

PAD

For fire control tower

Weight (steel), 0.22 lb. **Die number, 2129-YM**
Former die number, (485)

NOT STANDARD STOCK

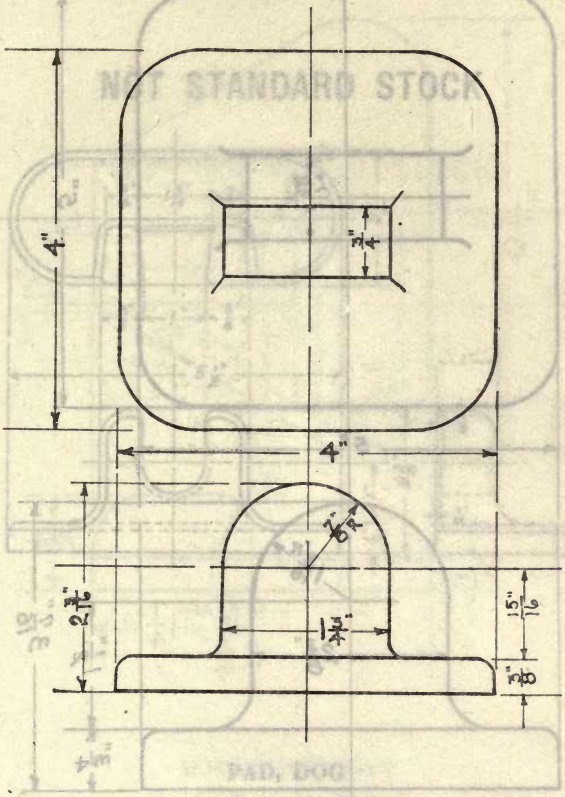

PAD, CHOCK, BOAT

Weight (steel), 2.16 lbs. **Die number, 2130-Y**
Former die number, (269)

NOT STANDARD STOCK

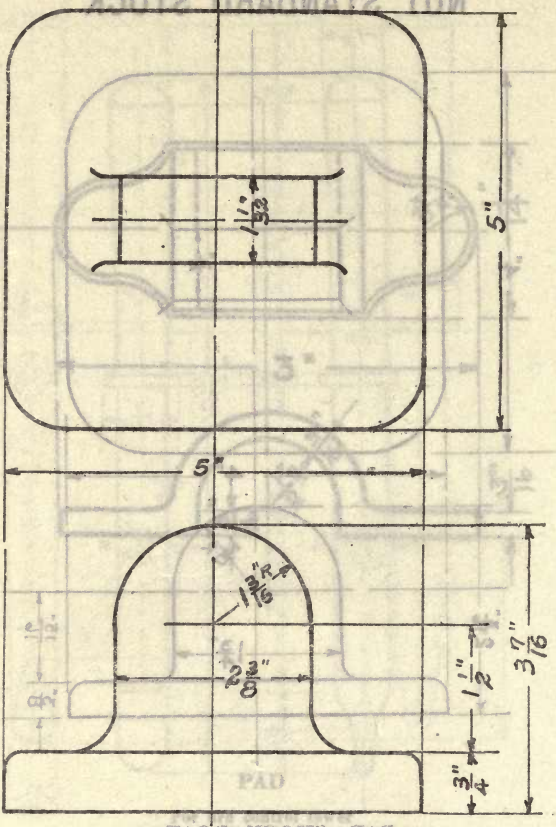

PAD, CHOCK, BOAT

Weight (steel), 5.69 lbs. **Die number, 2131-Y**
Former die number, (268)

NOT STANDARD STOCK

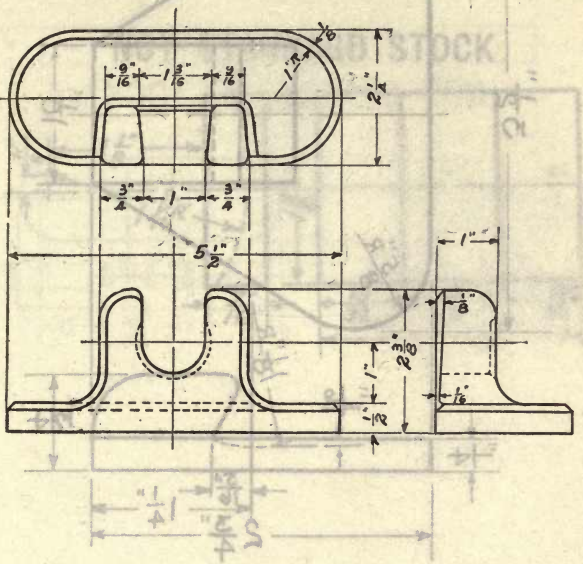

PAD, DOG

For portable ventilators

Weight, lbs. **Die number, 2132-B**
Former die number, (157)

NOT STANDARD STOCK

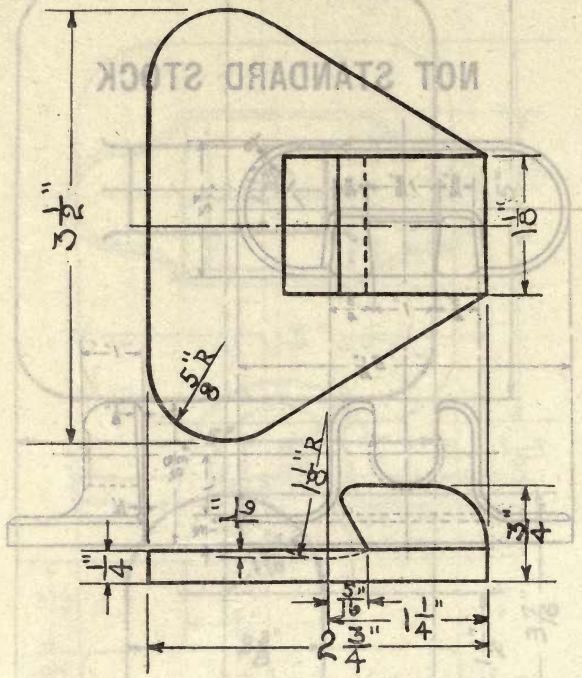

PAD, DOG, LATCH

For 7" gun port shutters

Weight (steel), 0.69 lb. **Die number, 2133-Y**
Former die number, (275)

NOT STANDARD STOCK

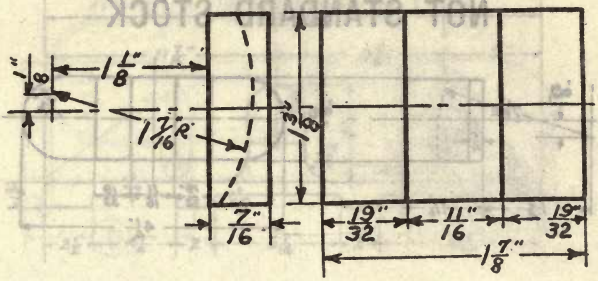

PAD, GUIDE

For 7" gun port shutters

Weight (steel), 0.28 lb. **Die number, 2134-Y**
Former die number, (353)

NOT STANDARD STOCK

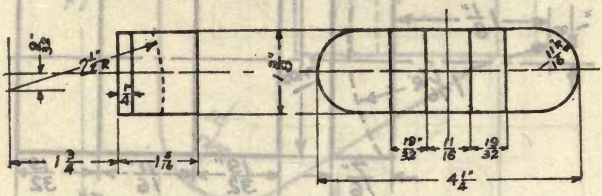

PAD, GUIDE

For 7" gun port shutters

Weight (steel), 1.06 lbs. **Die number, 2135-Y**
Former die number, (354)

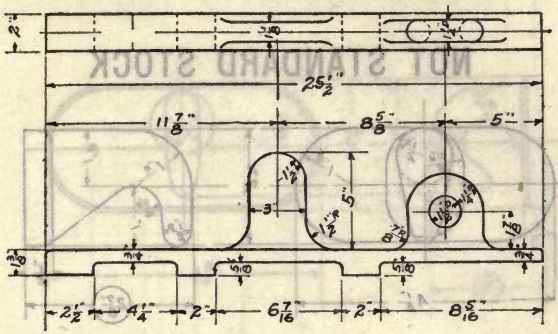

PAD, HOISTING

For sailing launches and cutters

Weight (steel), 32.0 lbs. **Die number, 2136-NM**
Former die number, (4-34)

NOT STANDARD STOCK

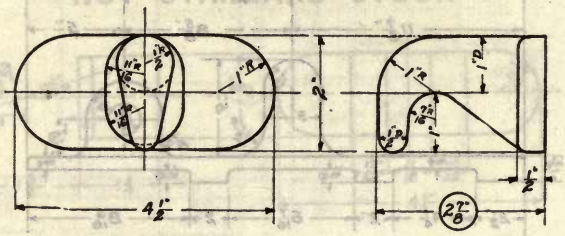

PAD, HOOK, 2 7/8″

Weight (steel), 2.0 lbs. Die number, 2137-MNB
Former die numbers, (4-9) (4-9) (108)

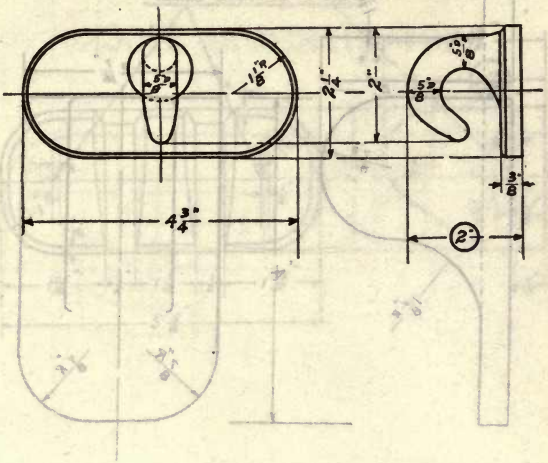

PAD, HOOK, 2″

Weight (steel), 1.3 lbs. **Die number, 2138-Y**
Former die number, (356)

NOT STANDARD STOCK

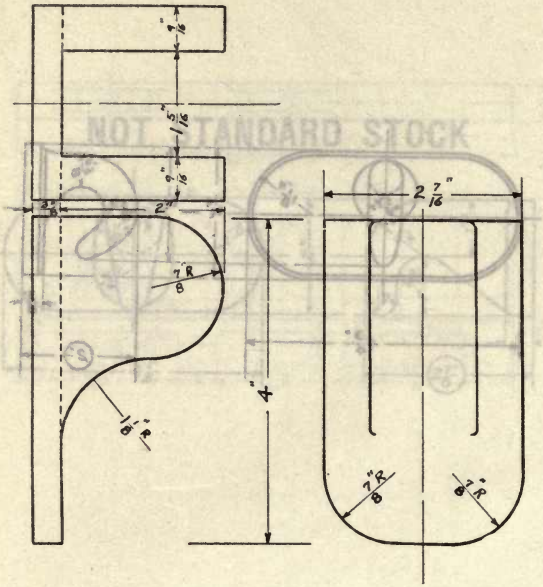

PAD, LADDER, METAL

Weight, lbs.

Die number, 2139-Y
Former die number, (516)

NOT STANDARD STOCK

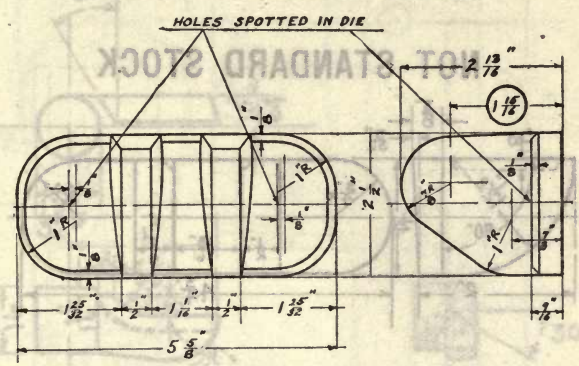
HOLES SPOTTED IN DIE
2 13/16"
1 15/16"
1/8
1/16
1/8
1/8
1/16
1/8
1/16
1/8
1/8
1/16
1/8
1/16
1/8
1/8
1/16

NOT STANDARD STOCK

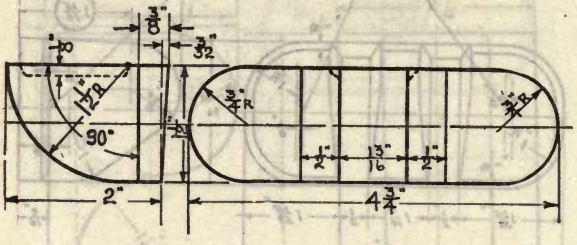

PAD, NOSE, DOG

Weight (steel), 1.44 lbs. **Die number, 2141-Y**
Former die number, (274)

NOT STANDARD STOCK

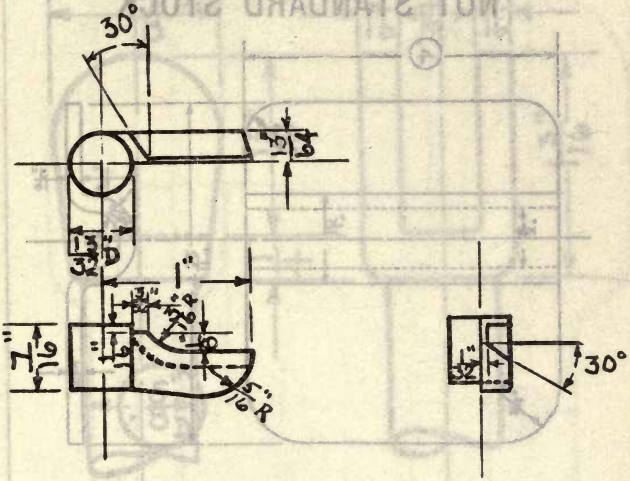

PAWL

Weight, **lbs.** **Die number, 2142-B**
Former die number, (257)

NOT STANDARD STOCK

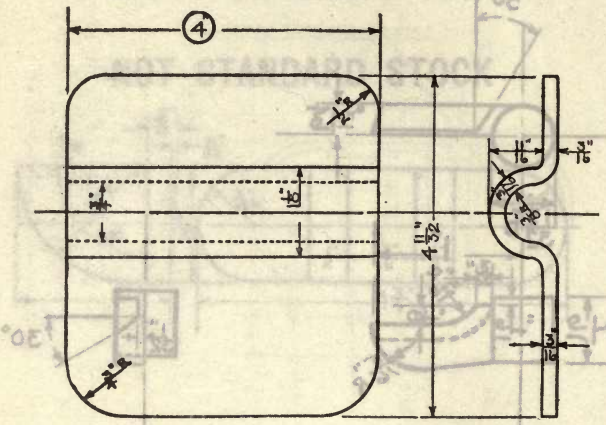

PLATE, HANDLE, 4″

Weight (steel), 1.0 lb. **Die number, 2143-N**
Former die number, (3-128)

NOT STANDARD STOCK

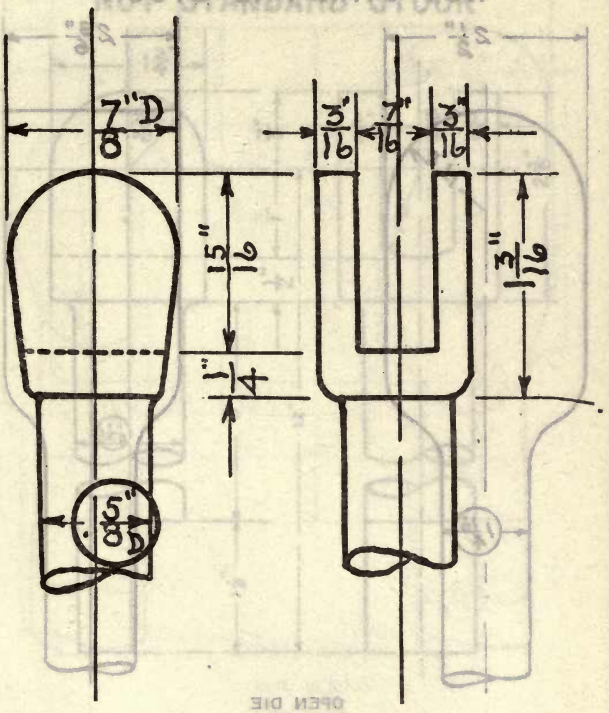

OPEN DIE

ROD, 5/8″ D; JAW END

Weight, lbs. **Die number, 2144-Y**
Former die number, (205)

NOT STANDARD STOCK

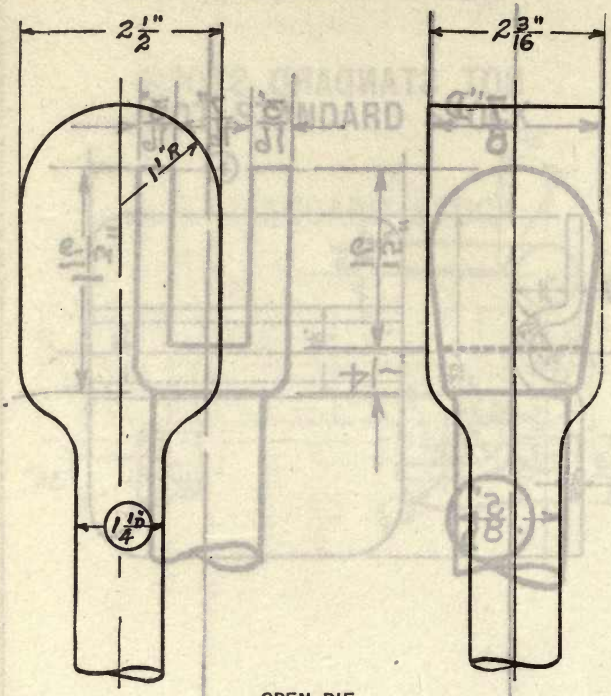

OPEN DIE

ROD, 1 1/4″ D.; END

Weight, lbs. Die number, 2145-N
Former die number, (3-70)

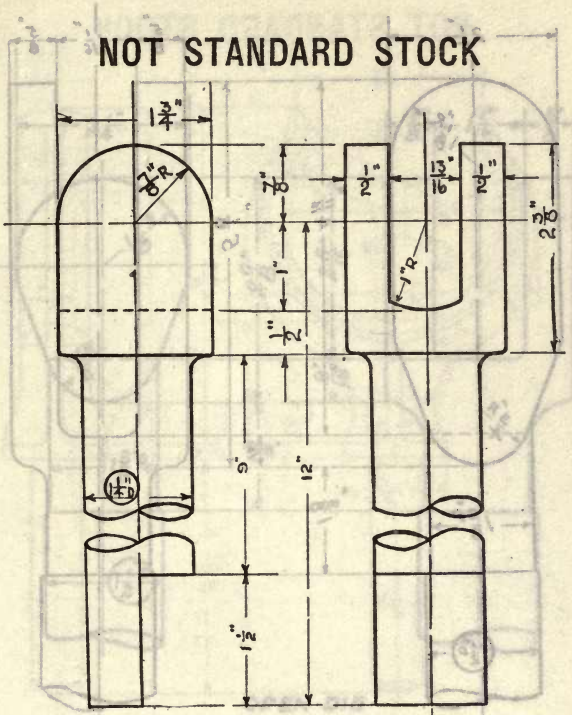

ROD, 1 1/4″ D.; JAW END

Weight (steel), 4.8 lbs. **Die number, 2146-Y**
Former die number, (302)

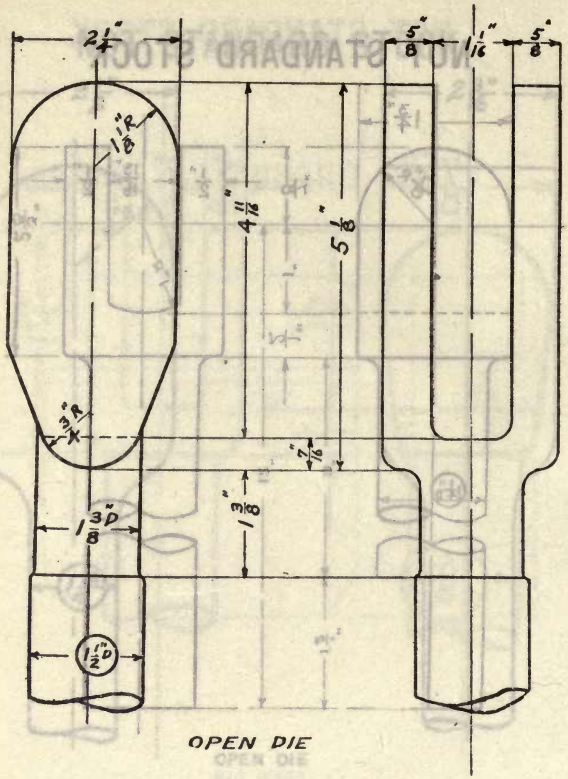

OPEN DIE

ROD, 1 1/2″ D.; JAW END

Weight, lbs. Die number, 2147-BY
Former die numbers, (166) (289)

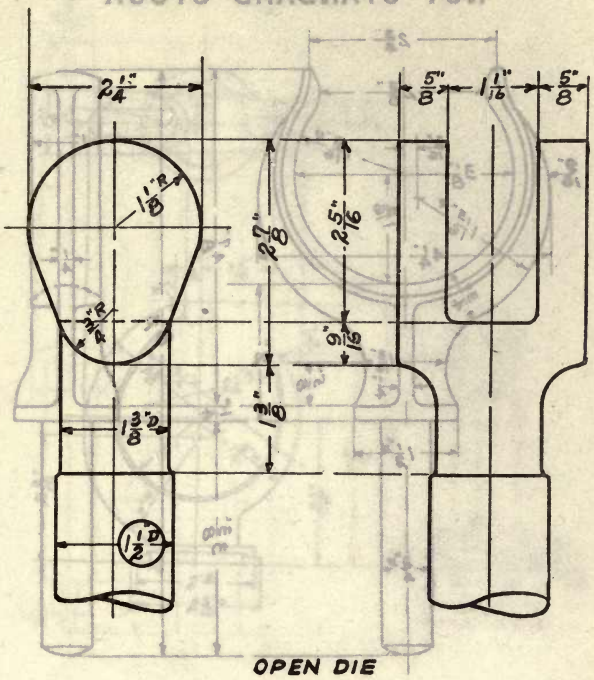

OPEN DIE

ROD, 1 1/2″ D.; JAW END

Weight, lbs. **Die number, 2148-BY**
Former die numbers, (169) (291)

NOT STANDARD STOCK

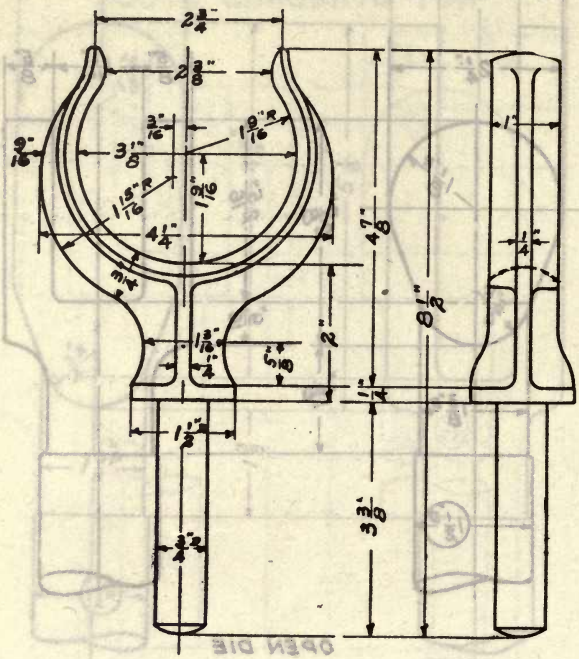

ROWLOCK, CUTTER, ELECTRIC

Weight (n. brass), 1.6 lbs. **Die number, 2149-Y**
Former die number, (467)

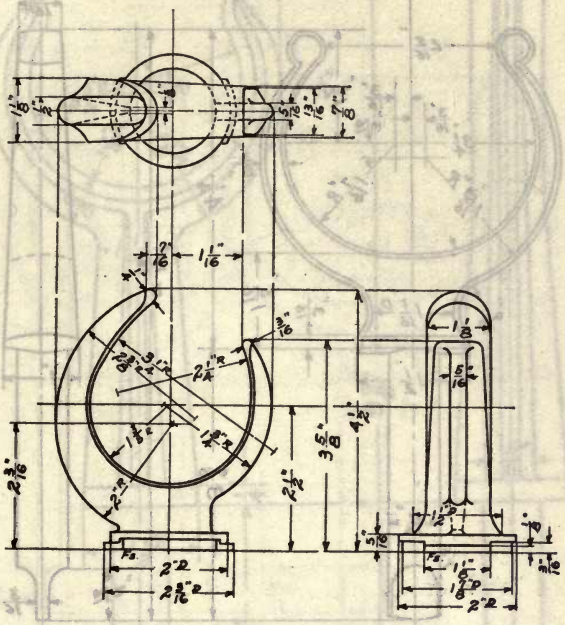

ROWLOCK, CUTTER, RACING, 31′

Weight (n. brass), **lbs.** **Die number, 2150-Y**
Former die number, (462)

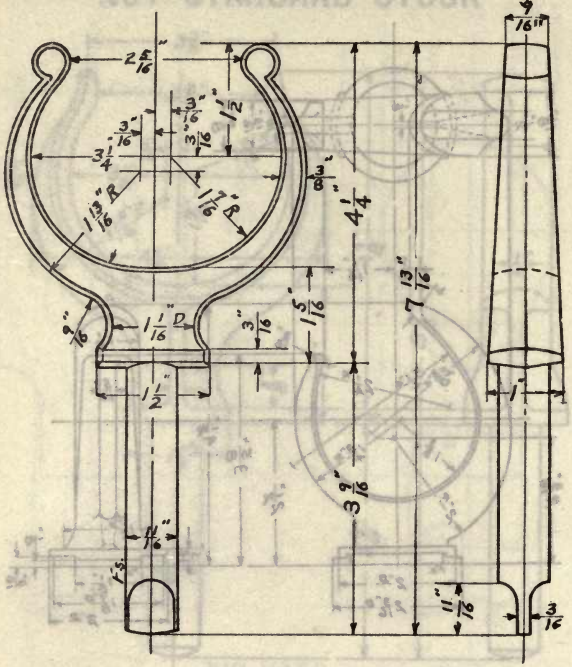

ROWLOCK, DINGHY, PUNT, AND DORY

Weight (n. brass), 1.3 lbs. **Die number, 2151-YM**
Former die number, (465)

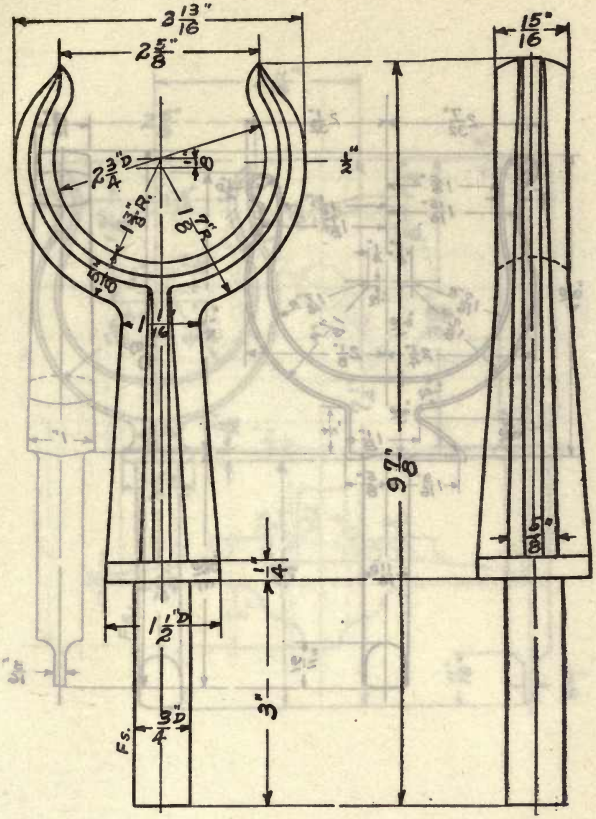

ROWLOCK, STEAMER

Weight (n. brass), 1.9 lbs. **Die number, 2152-Y**
Former die number, (469)

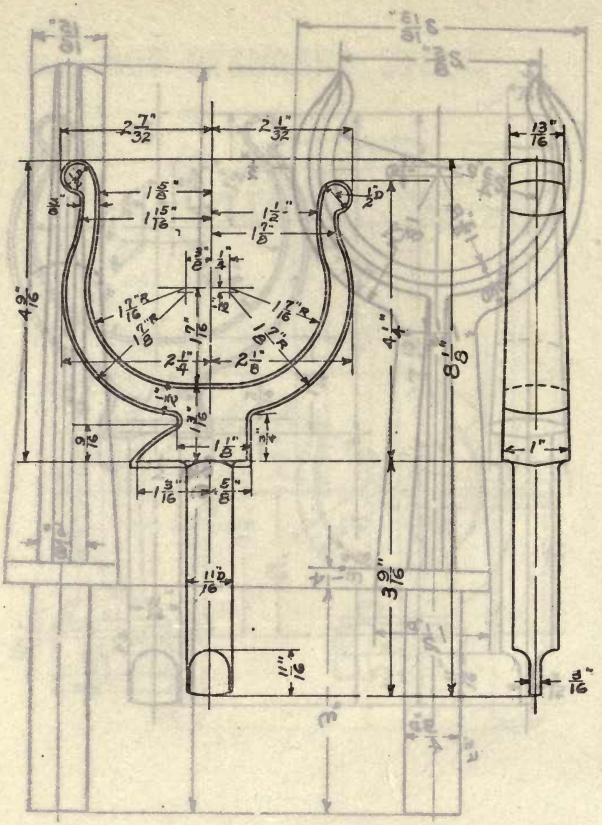

ROWLOCK, WHALEBOAT AND 24′ CUTTER

Weight (n. brass), 1.7 lbs. **Die number, 2153-YM.**
Former die number, (460)

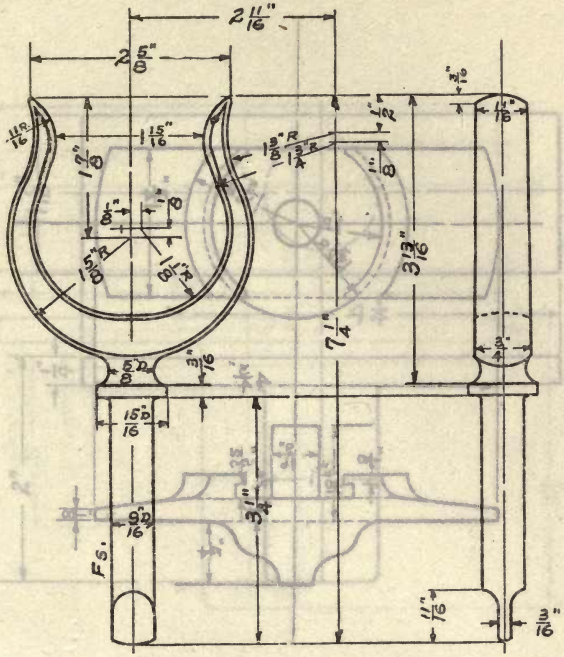

ROWLOCK, WHERRY

Weight (n. brass), 0.91 lb. **Die number, 2154-YM**
Former die number, (464)

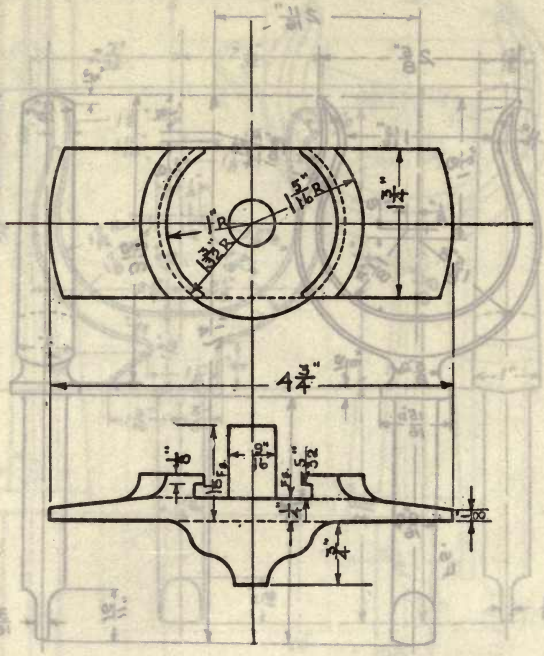

SOCKET, ROWLOCK, CUTTER, RACING, 31′

Weight (n. brass), 1.0 lb. **Die number, 2155-Y**
Former die number, (461)

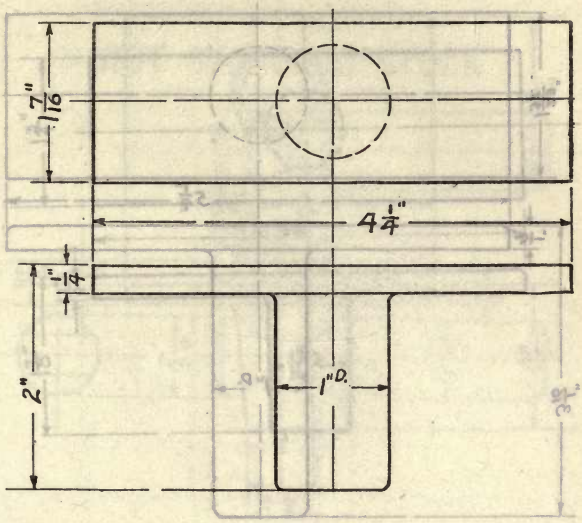

SOCKET, ROWLOCK, DINGHY, PUNT, AND DORY

Weight, lbs. **Die number, 2156-YM**
Former die number, (466)

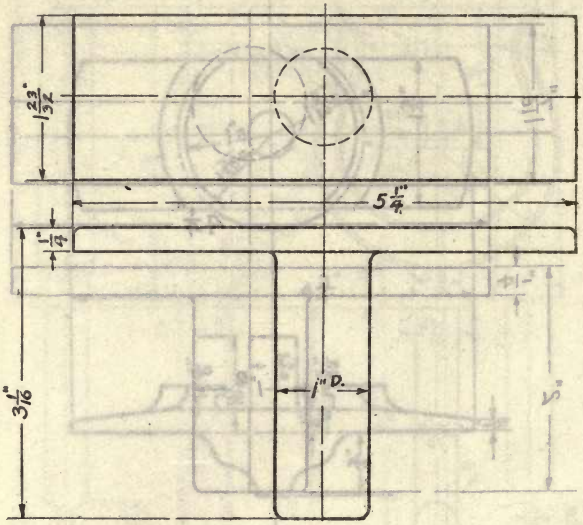

SOCKET, ROWLOCK, STEAMER

Weight, lbs.

Die number, 2157-YM
Former die number, (468)

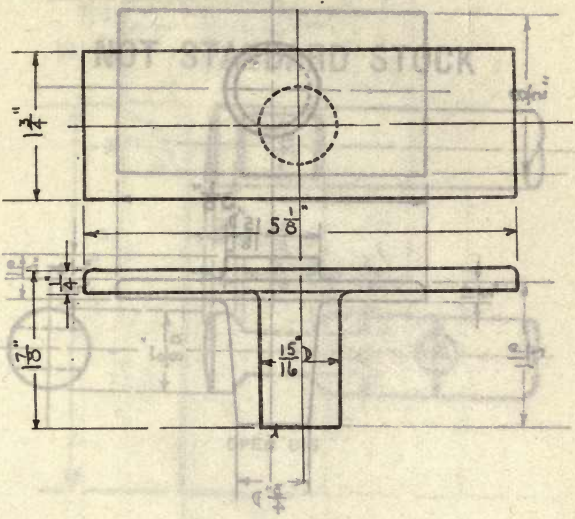

SOCKET, ROWLOCK, WHALEBOAT AND 24′ CUTTER

Weight, lbs. **Die number, 2158-Y**
Former die number, (459)

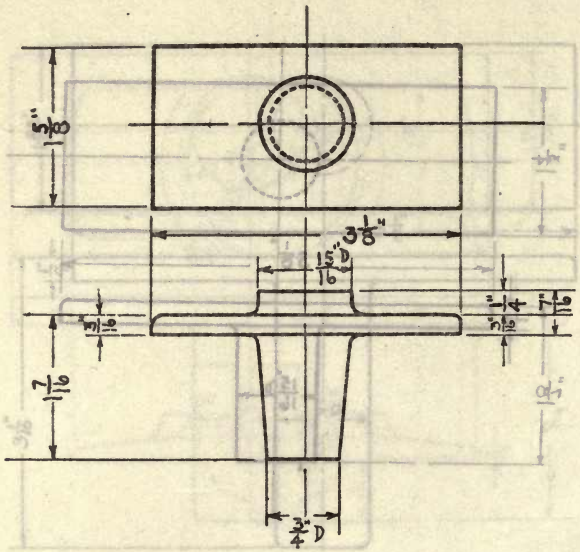

SOCKET, ROWLOCK, WHERRY

Weight, lbs. **Die number, 2159-Y**
Former die number, (463)

NOT STANDARD STOCK

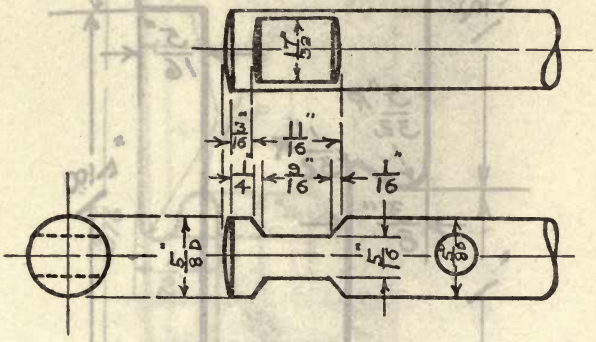

OPEN DIE

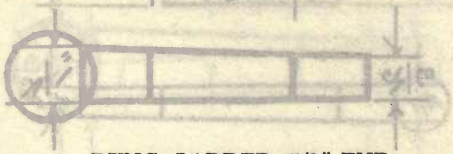

RUNG, LADDER, 5/8″ END

Weight, **lbs.** **Die number, 2160-B**
Former die number, (263)

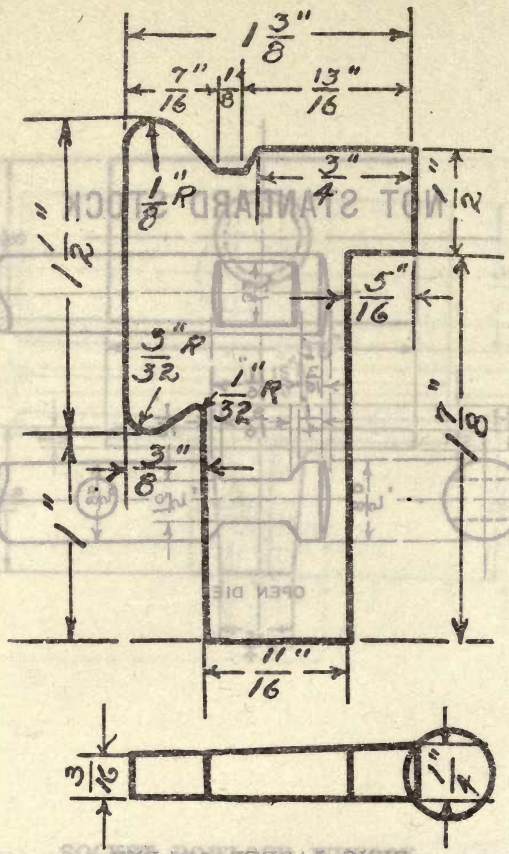

SEGMENT, COMMUTATOR, 1/4″

Weight (copper), 0.20 lb. **Die number, 2161-Y**
Former die number, (300)

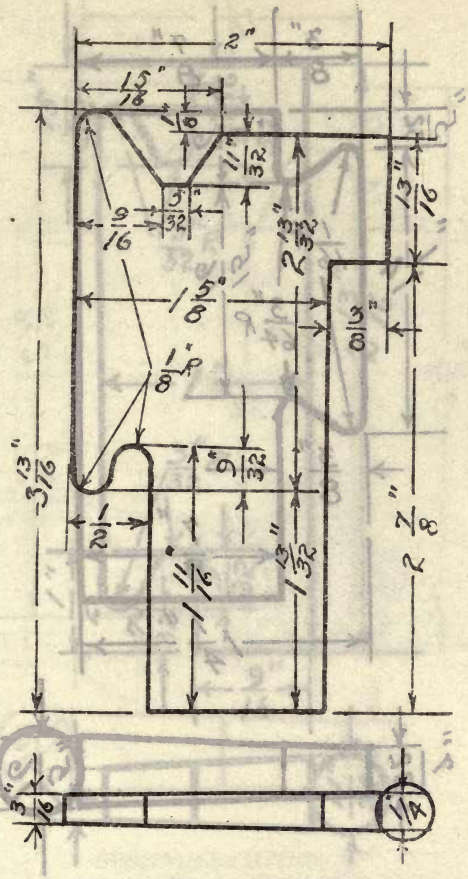

SEGMENT, COMMUTATOR, 1/4″

Weight (copper), 0.56 lb. **Die number, 2162-Y**
Former die number, (301)

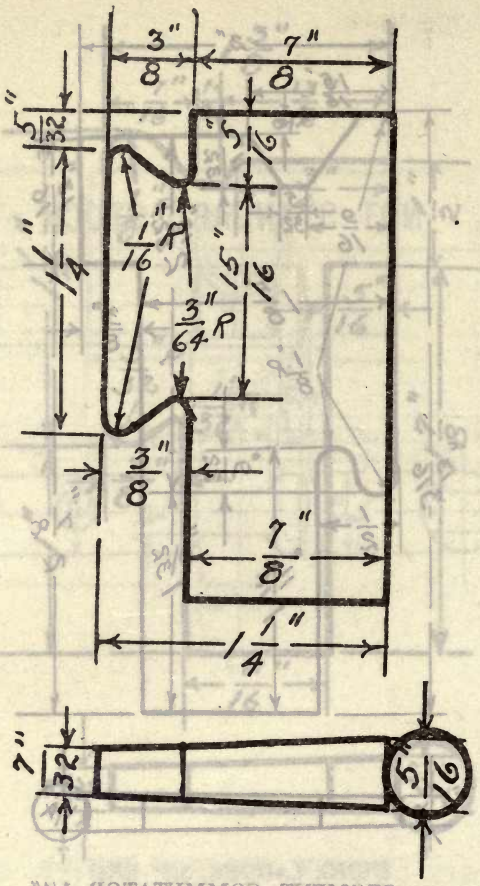

SEGMENT, COMMUTATOR, 5/16″

Weight (copper), 0.27 lb. **Die number, 2163-Y**
Former die number, (346)

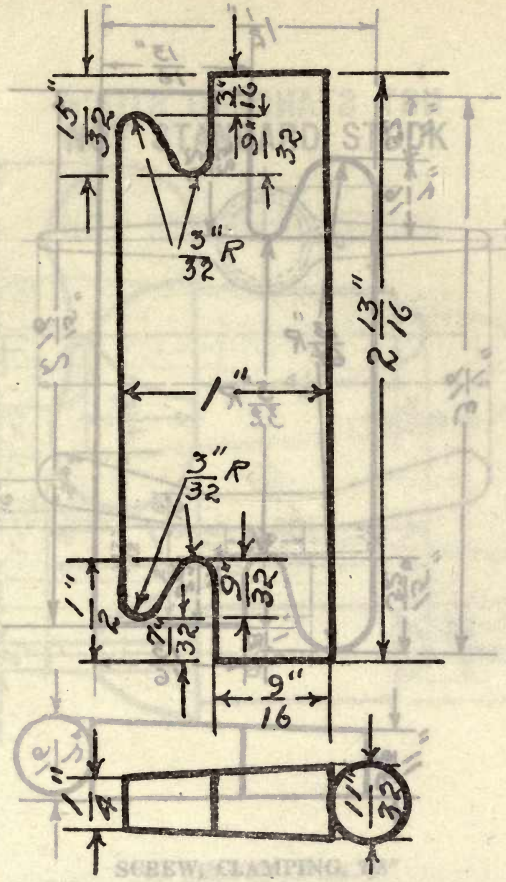

SEGMENT, COMMUTATOR, 11/32″

Weight (copper), 0.25 lb. **Die number, 2164-Y**
Former die number, (297)

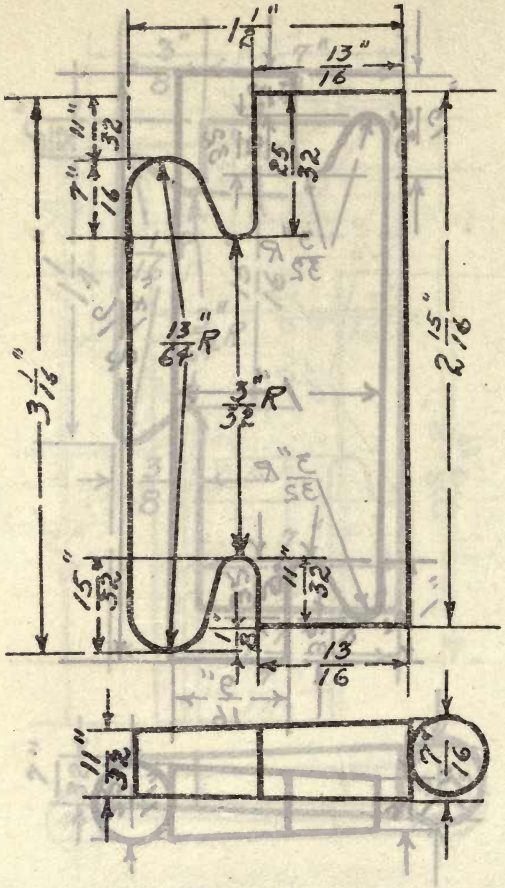

SEGMENT, COMMUTATOR, 7/16″

Weight (copper), 0.52 lb. **Die number, 2165-Y**
Former die number, (298)

NOT STANDARD STOCK

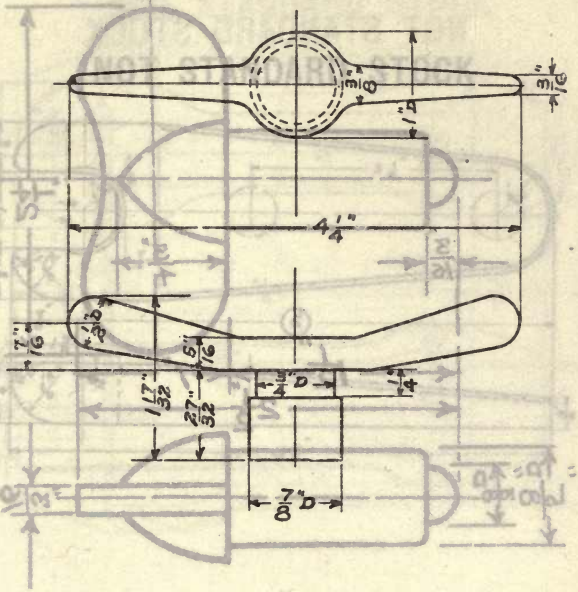

SCREW, CLAMPING, 7/8″

Weight (brass), 0.38 lb. Die number, 2166-N
Former die number, (3-108)

NOT STANDARD STOCK

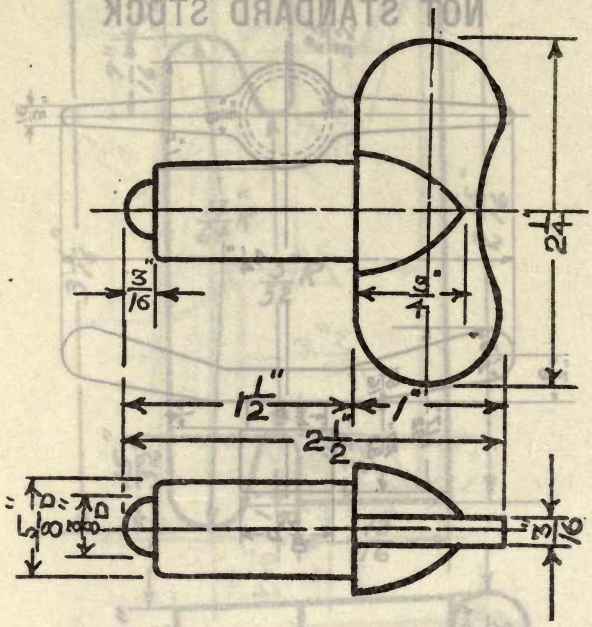

SCREW, THUMB, 5/8″

Weight, lbs. **Die number, 2167-M**
Former die number, (4-62)

NOT STANDARD STOCK

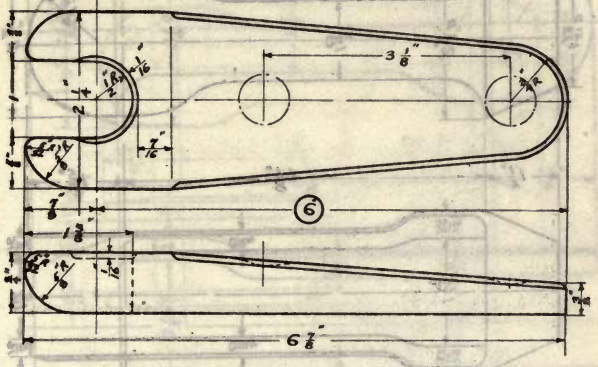

DOG, FLAT, 6″

Weight (steel), 2.1 lbs.

Die number, 2168-Y
Former die number, (57)

NOT STANDARD STOCK

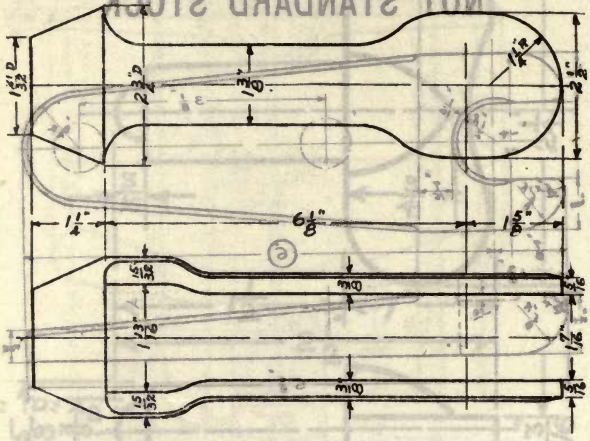

SHACKLE, SWIVEL, SCREW, RIGGING, 2″

Weight, lbs.

Die number, 2169-B
Former die number, (201)

NOT STANDARD STOCK

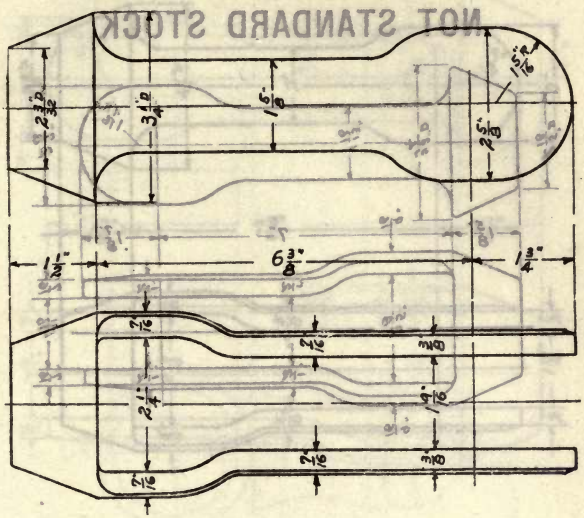

SHACKLE, SWIVEL, SCREW, RIGGING, 2 1/2″

Weight, lbs. **Die number, 2170-B**
Former die number, (209)

NOT STANDARD STOCK

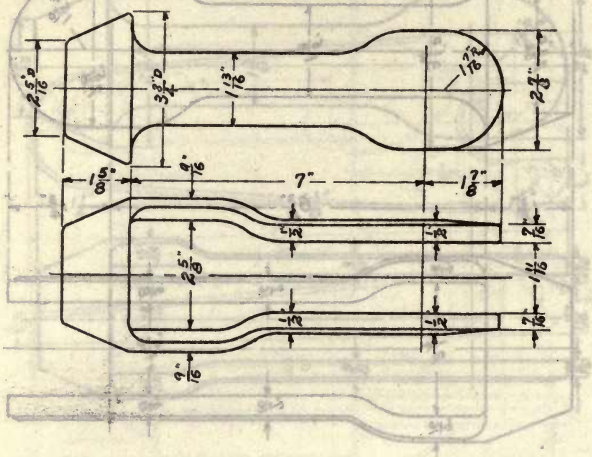

SHACKLE, SWIVEL, SCREW, RIGGING, 3"

Weight, lbs. **Die number, 2171-B**
Former die numbers, (134 and 137)

NOT STANDARD STOCK

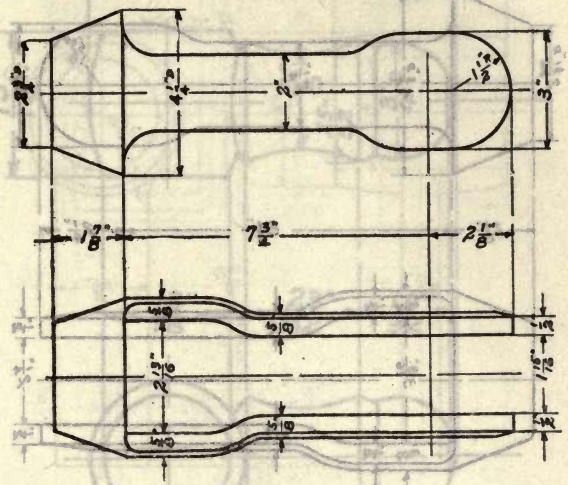

SHACKLE, SWIVEL, SCREW, RIGGING, 3 1/2″

Weight, lbs. Die number, 2172-B
Former die numbers, (210 and 211)

NOT STANDARD STOCK

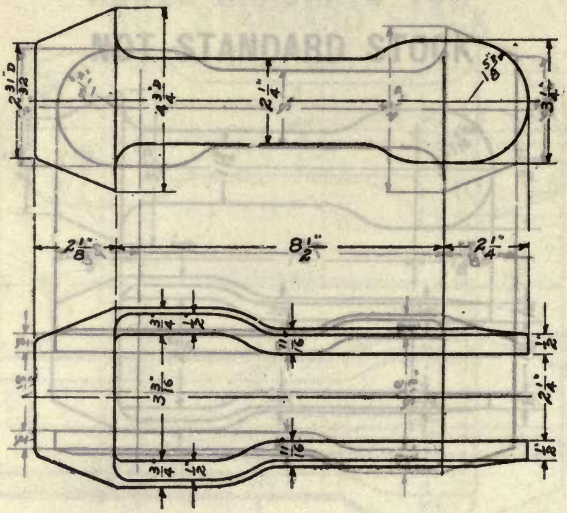

SHACKLE, SWIVEL, SCREW, RIGGING, 4″

Weight, lbs. **Die number, 2173-B**
Former die numbers, (139 and 143)

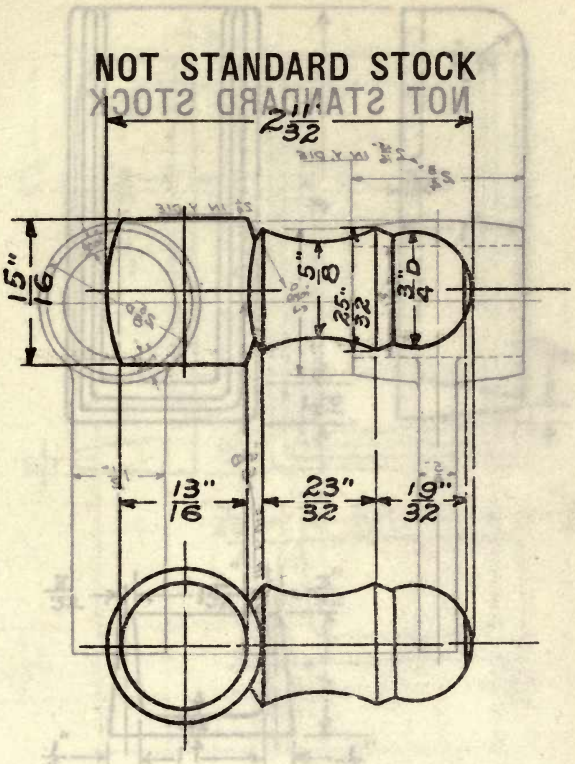

SOCKET, ARM, RACK, TOWEL

Weight (n. brass), 0.31 lb. **Die number, 2174-YB**
Former die numbers, (245) (105)

NOT STANDARD STOCK

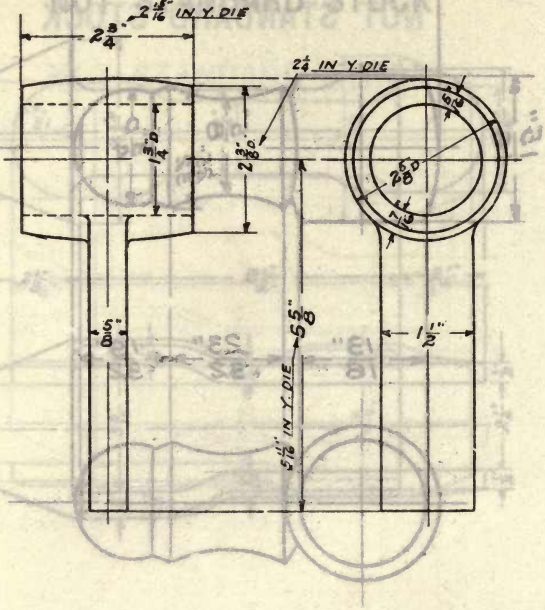

SOCKET, BAR, HANDLE

For handy billy pump

Weight (steel), 3.34 lbs. **Die number, 2175-MY**
Former die numbers, (3-34) (414)

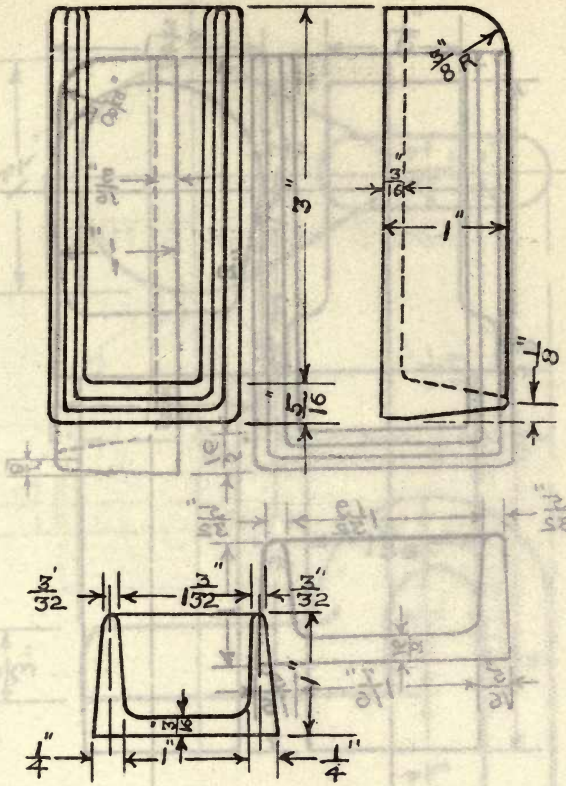

SOCKET, BATTEN

For 7/8" x 2 3/4" battens

Weight, lbs. **Die number, 2176-YM**
Former die number, (441)

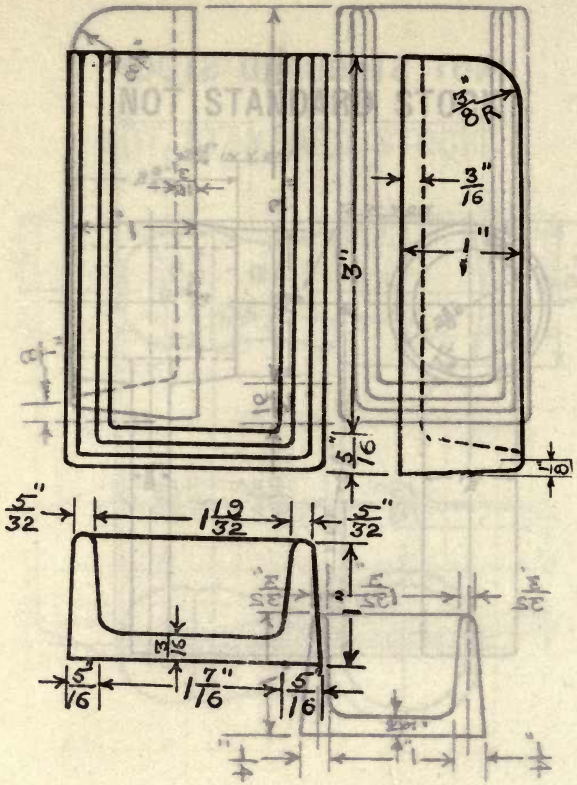

SOCKET, BATTEN

For 1 3/8" x 2 3/4" battens

Weight, lbs. **Die number, 2177-Y**
Former die number, (442)

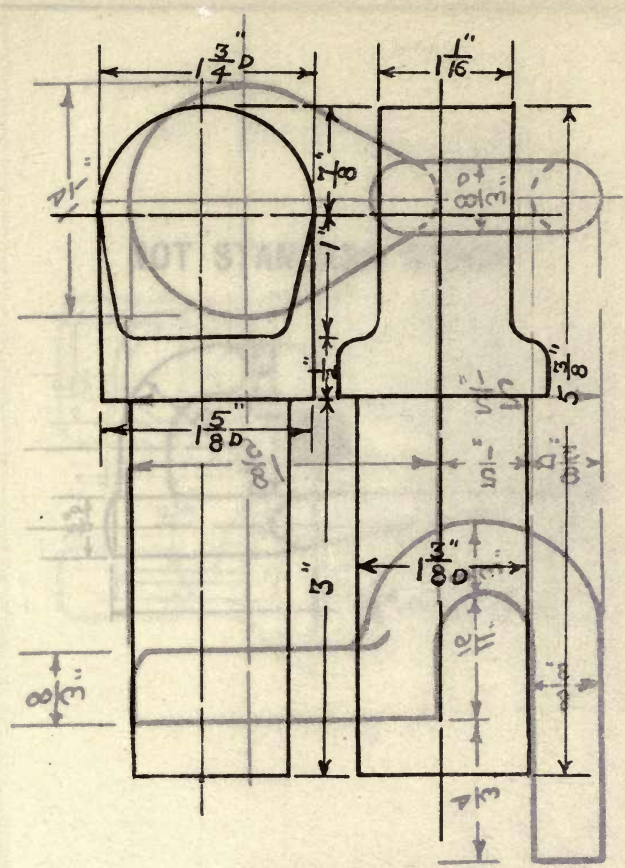

SOCKET, PIPE, 1 1/4″

Weight (steel), 2.59 lbs. **Die number, 2178-X**
Former die number, (278)

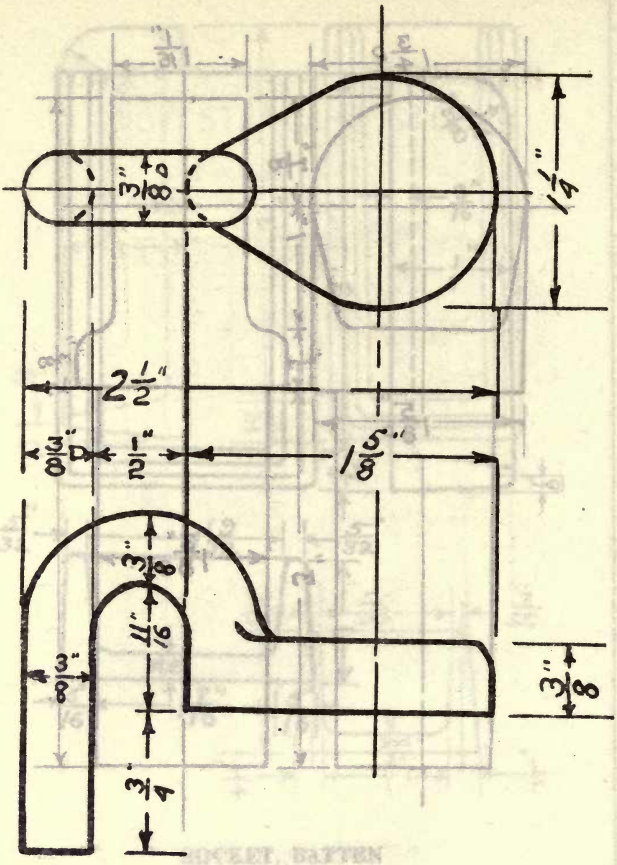

STAPLE, HOOK, DOOR

Weight (steel), 0.25 lb. **Die number, 2179-MN**
Former die numbers, (3-28) (3-28)

NOT STANDARD STOCK

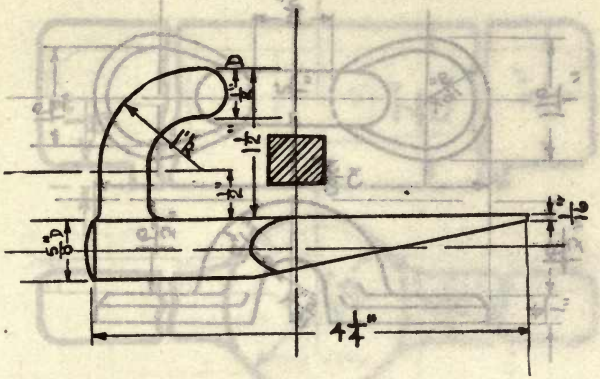

STAPLE, BLOCKING, DRY DOCK

Weight (steel), 0.50 lb. **Die number, 2180-B**
Former die number, (150)

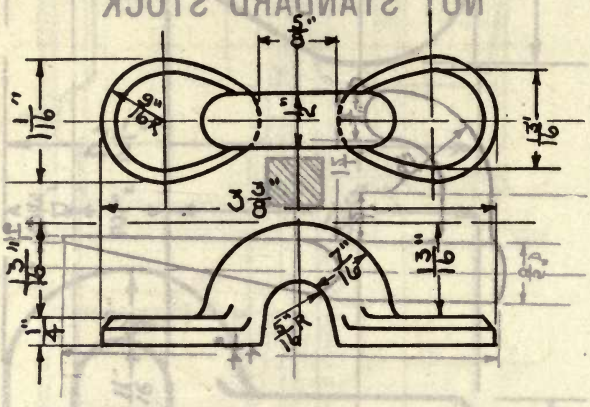

STRONGBACK

Weight (steel), 0.25 lb. **Die number, 2181-B**
Former die number, (36)

NOT STANDARD STOCK

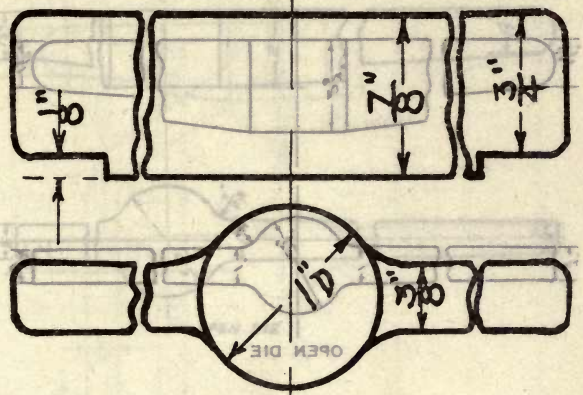

OPEN DIE

STRONGBACK, HOLE, PEEP

Used in conning tower

Weight (steel), 0.81 lb. **Die number, 2182-Y**
Former die number, (207)

NOT STANDARD STOCK

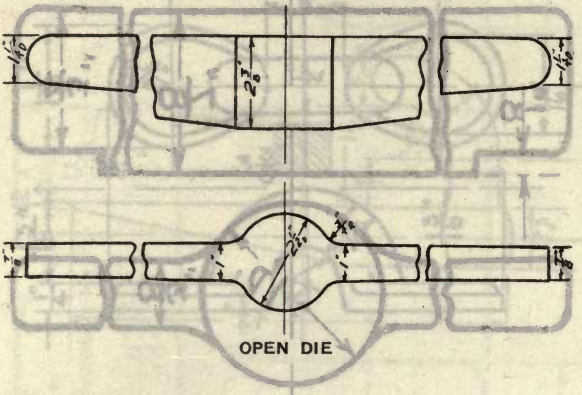

STRONGBACK, SCUTTLE, COAL

Weight, lbs. **Die number, 2183-Y**
Former die number, (237)

NOT STANDARD STOCK

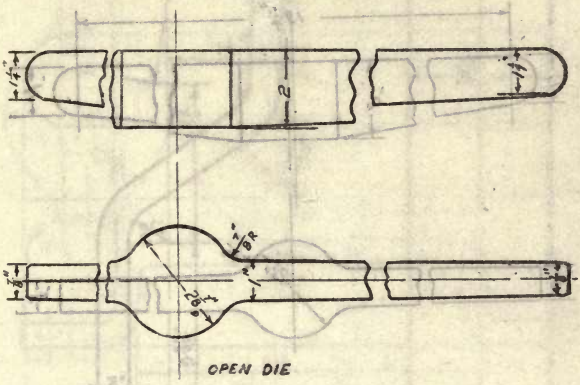

STRONGBACK, SCUTTLE, COAL

Weight, **lbs.** **Die number, 2184-M**
Former die number, (4-18)

NOT STANDARD STOCK

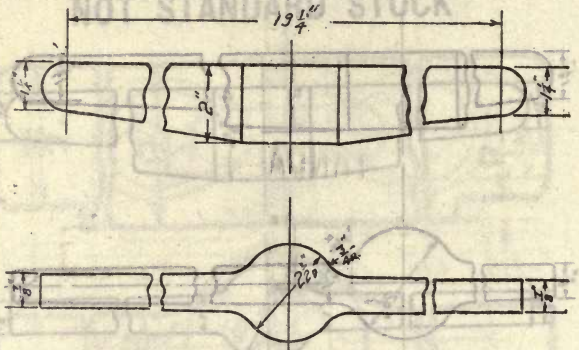

STRONGBACK, SCUTTLE, COAL, 18″

Weight (steel), 10.69 lbs. **Die number, 2185-Y**
Former die number, (238)

NOT STANDARD STOCK

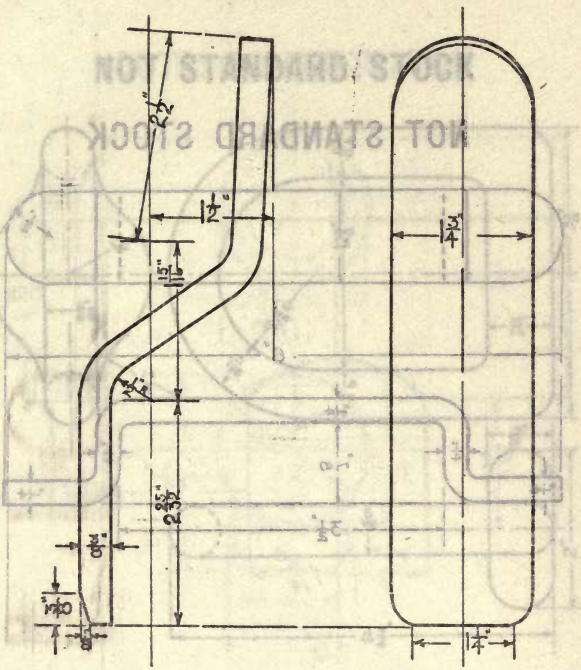

STRAP, SIDE

For ammunition trolley

Weight (steel), 1.31 lbs. **Die number, 2186-X**
Former die number, (417)

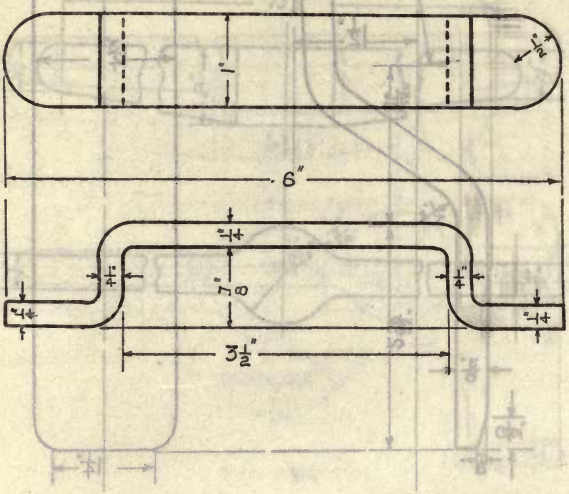

SUPPORT, LUBRICATOR

Weight (steel), 0.75 lb. **Die number, 2187-N**
Former die number, (3-88)

NOT STANDARD STOCK

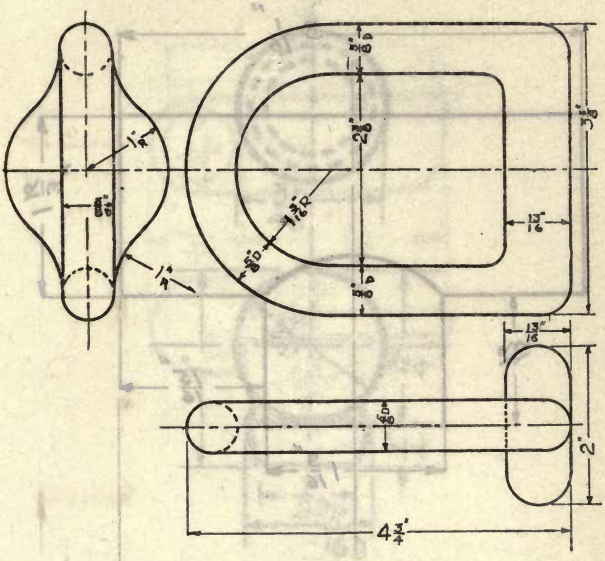

SWIVEL, BUOY, CORK

Weight (steel), 1.66 lbs. **Die number, 2188-Y**
Former die number, (392)

NOT STANDARD STOCK

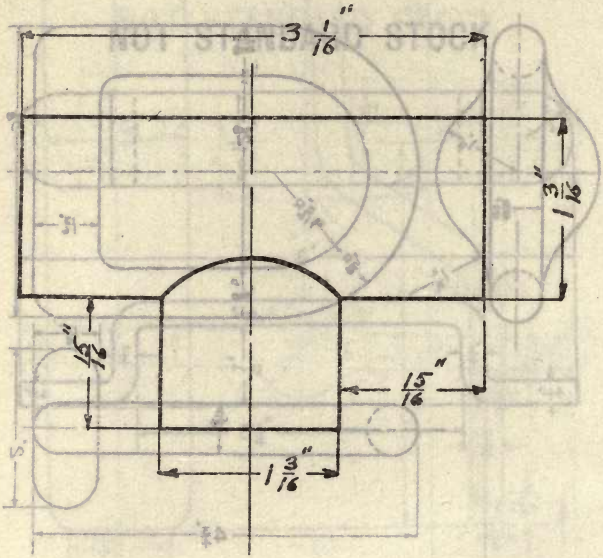

TEE, HIGH PRESSURE, 1/2″

Weight (n. brass), 1.5 lbs. **Die number, 2189-Y**
Former die number, (382)

NOT STANDARD STOCK

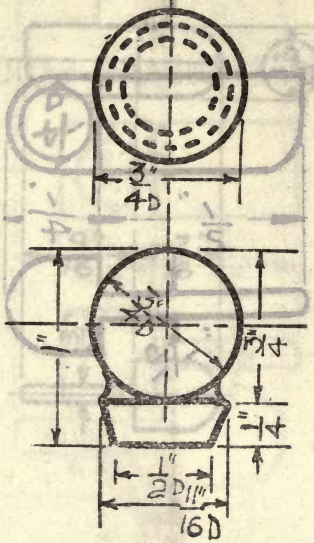

TIP, ARM, RACK, TOWEL

Weight (n. brass), **lbs.** **Die number, 2190-B**
Former die number, (105)

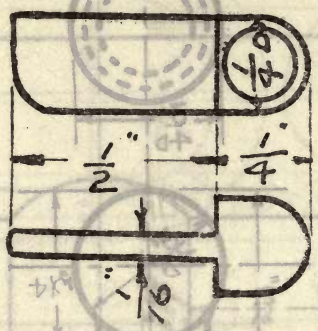

TOGGLE, 1/4″

Weight, lbs. **Die number, 2191-Y**
Former die number, (191)

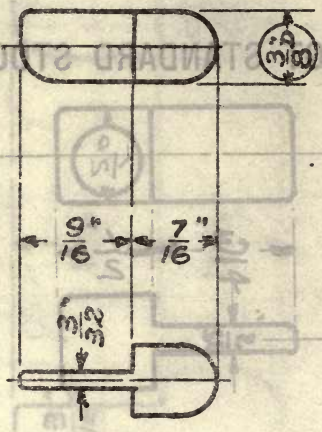

TOGGLE, 3/8″

Weight, lbs. **Die number, 2193-Y**
Former die number, (454)

NOT STANDARD STOCK

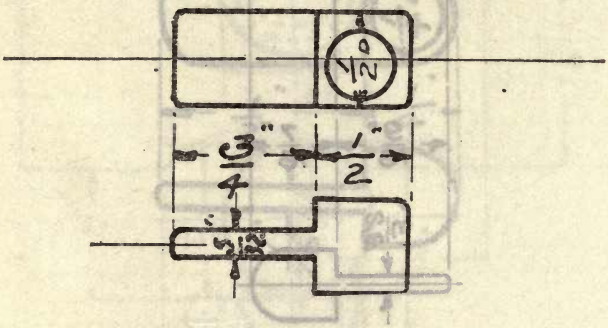

TOGGLE, 1/2″

Weight (brass), 0.03 lb. **Die number, 2193-MN**
Former die numbers, (3-22) (3-22)

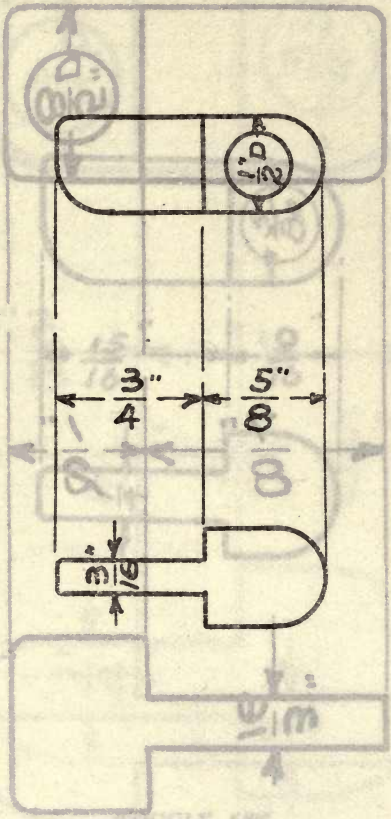

TOGGLE, 1/2″

Weight, lbs. Die number, 2194-Y
Former die number, (40)

NOT STANDARD STOCK

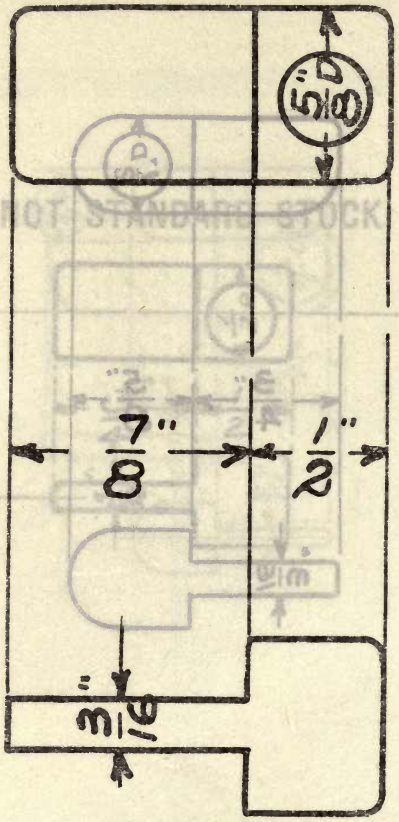

TOGGLE, 5/8″

Weight (brass), 0.05 lb. Die number, 2195-MN
Former die numbers, (3-23) (3-23)

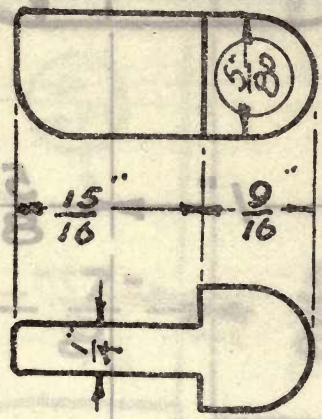

TOGGLE, 5/8″

Weight, lbs. **Die number, 2196-Y**
Former die number, (420)

NOT STANDARD STOCK

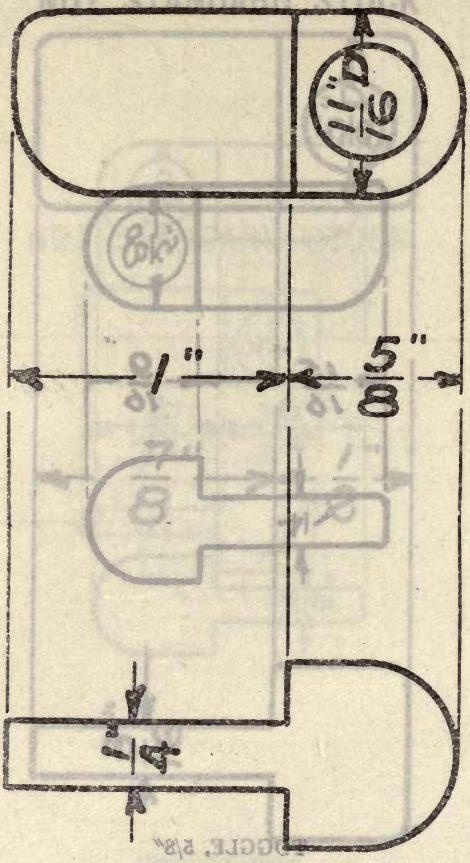

TOGGLE, 11/16″

Weight, lbs. Die number, 2197-Y
Former die number, (48)

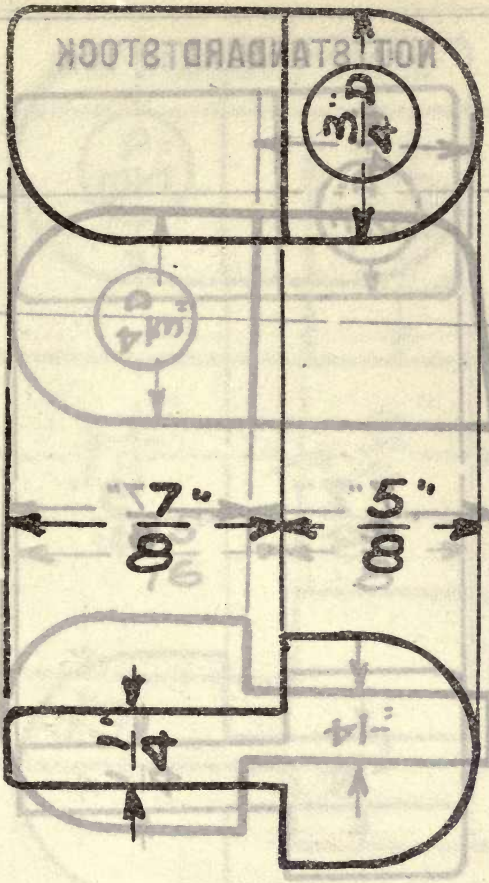

TOGGLE, 3/4″

Weight, lbs.

Die number, 2198-Y
Former die number, (190)

NOT STANDARD STOCK

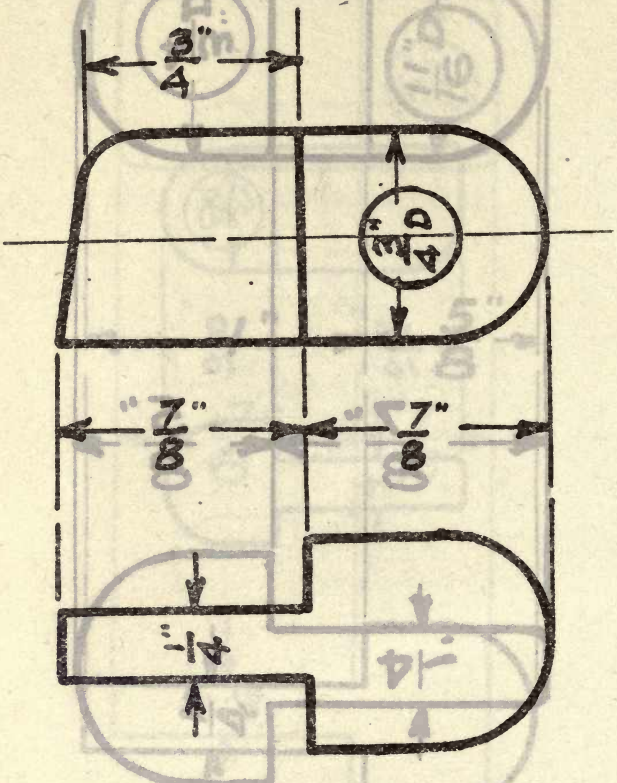

TOGGLE, 3/4"

Weight, **lbs.** **Die number, 2199-B**
Former die number, (99)

NOT STANDARD STOCK

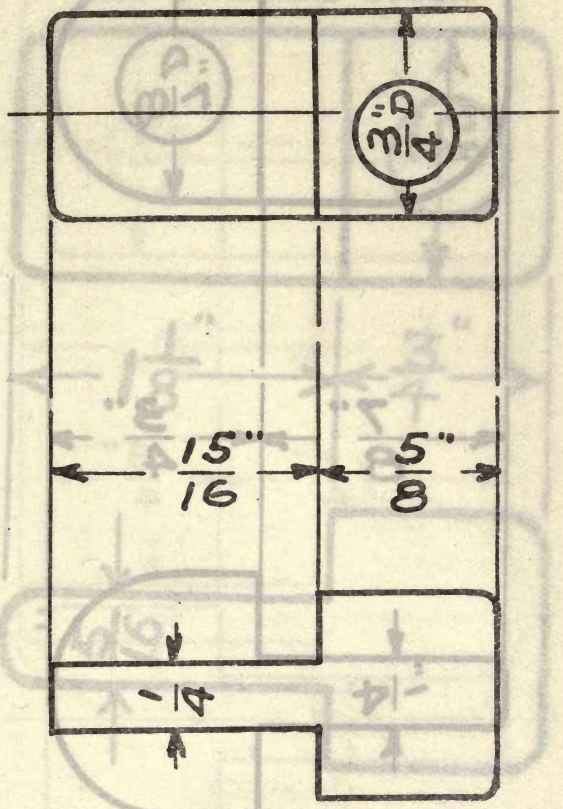

TOGGLE, 3/4″

Weight (brass), 0.08 lb. Die number, 2200-MN
Former die numbers, (3-24) (3-24)

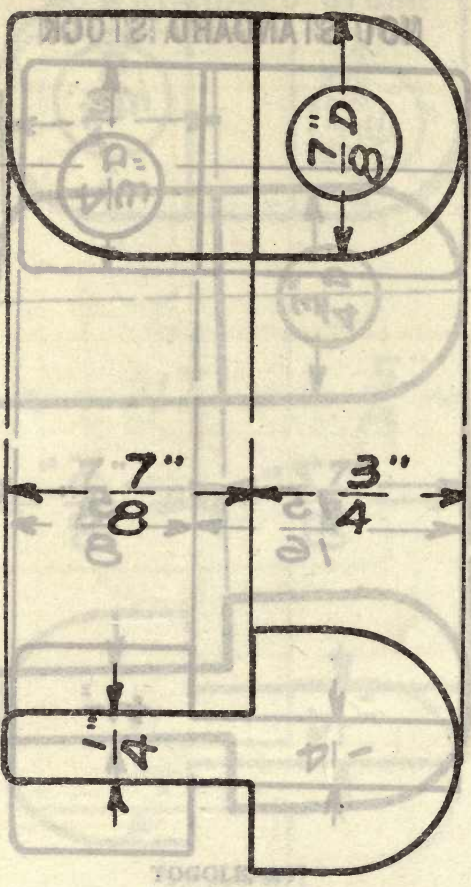

TOGGLE, 7/8″

Weight (steel), lbs. Die number, 2201-Y
Former die number, (192)

NOT STANDARD STOCK

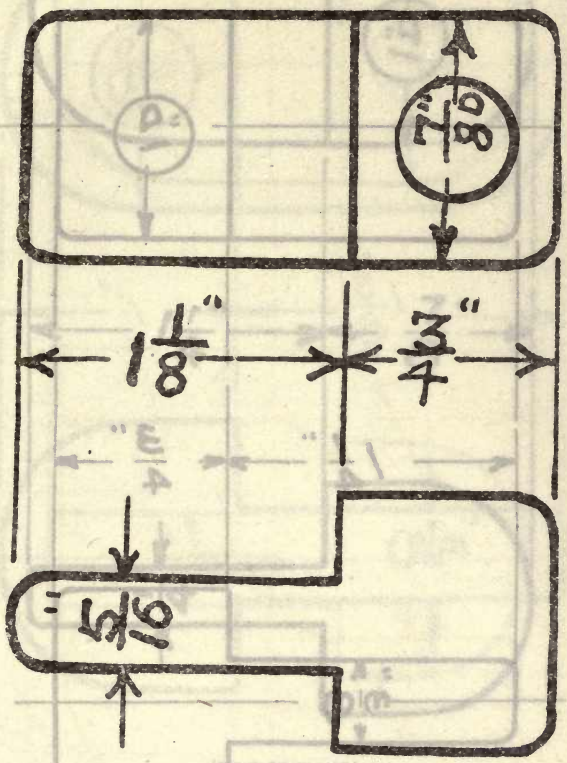

TOGGLE, 7/8″

Weight, **lbs.** **Die number, 2202-MN**
Former die numbers, (3-25) (3-25)

NOT STANDARD STOCK

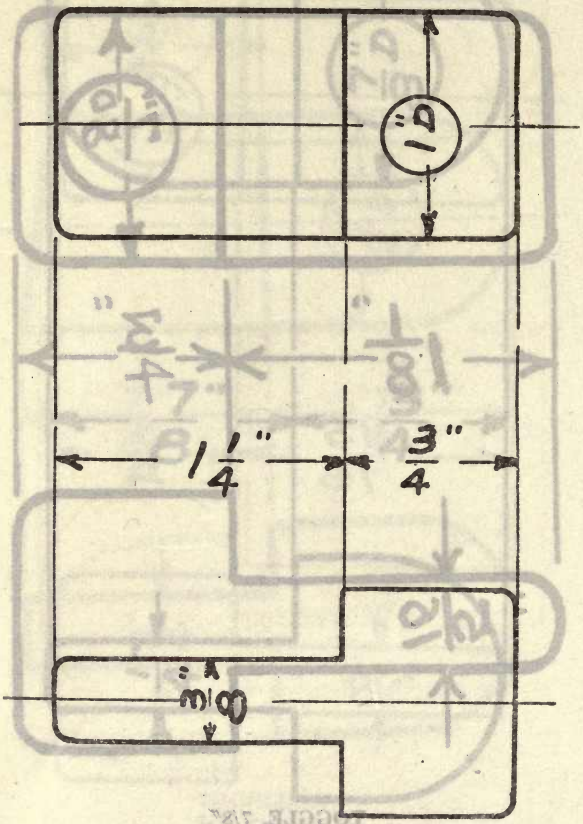

TOGGLE, 1″

Weight, lbs. Die number, 2203-MN
Former die numbers, (3-26) (3-26)

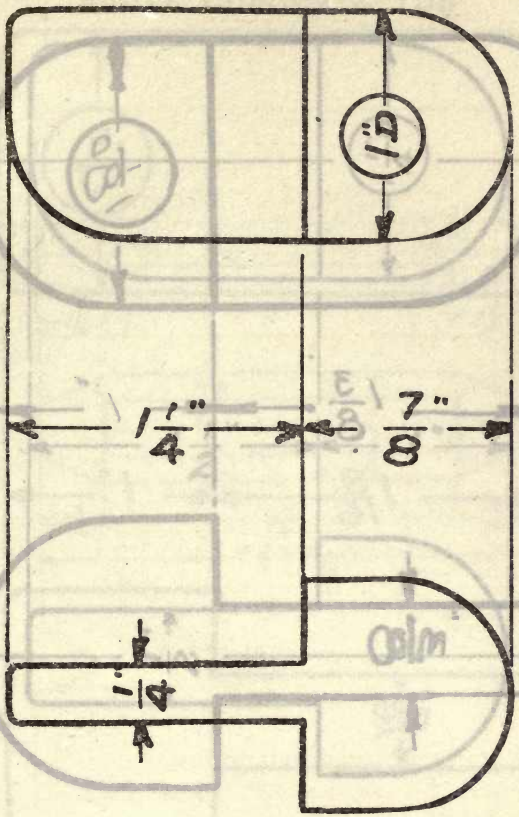

TOGGLE, 1″

Weight, lbs. Die number, 2204-Y
Former die number, (193)

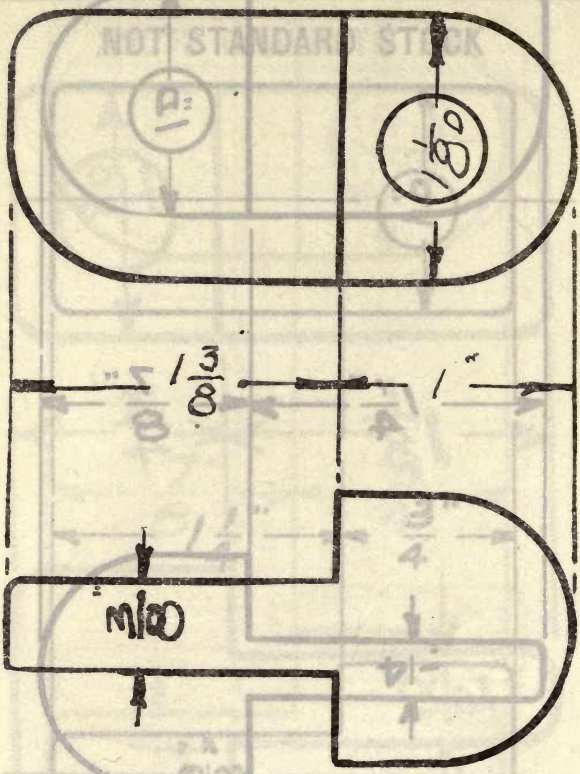

TOGGLE, 1 1/8″

Weight, lbs. **Die number, 2205-Y**
Former die number, (194)

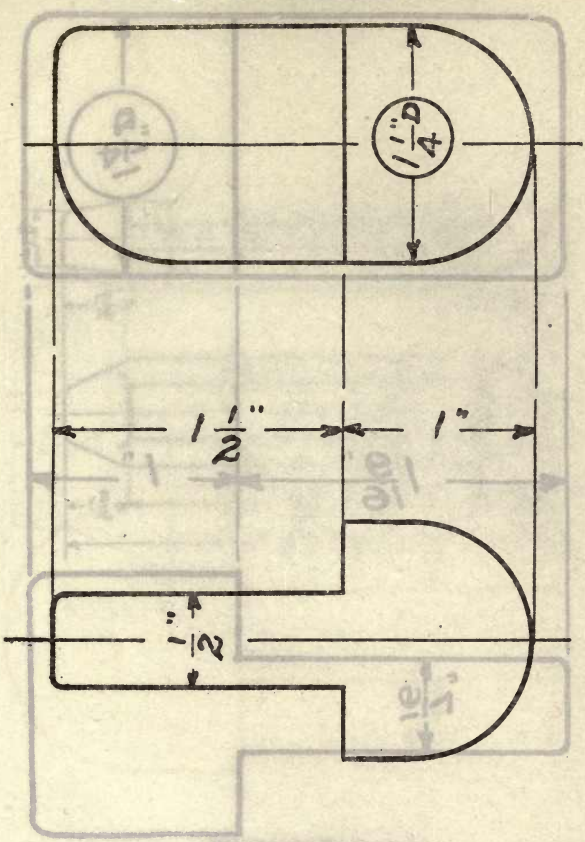

TOGGLE, 1 1/4″

Weight, **lbs.** **Die number, 2206-Y**
Former die number, (421)

NOT STANDARD STOCK

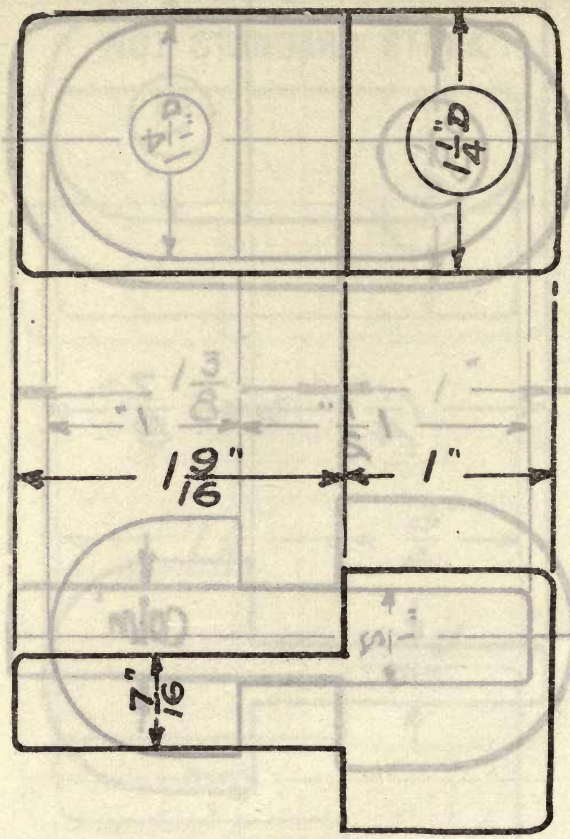

TOGGLE, 1 1/4″

Weight, lbs. Die number, 2207-MN
Former die numbers, (3-55) (3-51)

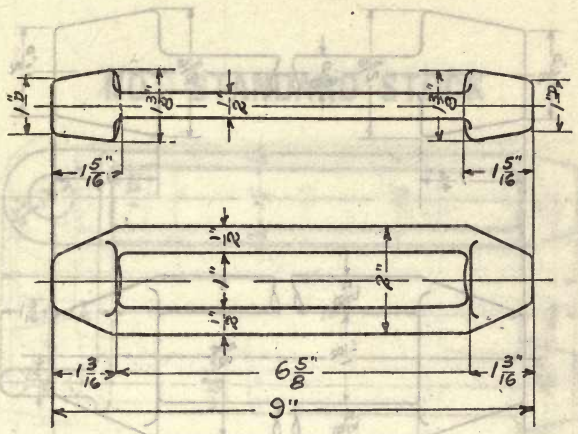

TURNBUCKLE, 5/8″

Weight (steel), 1.6 lbs. **Die number, 2208-Y**
Former die number, (240)

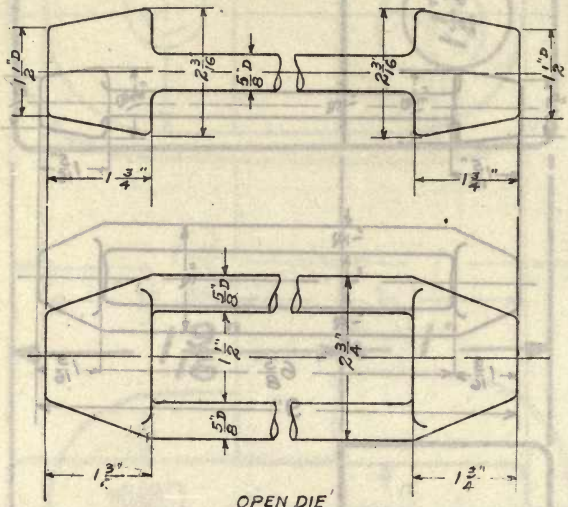

TURNBUCKLE, 3/4″

Weight, **lbs.** **Die number, 2209-Y**
Former die number, (299)

NOT STANDARD STOCK

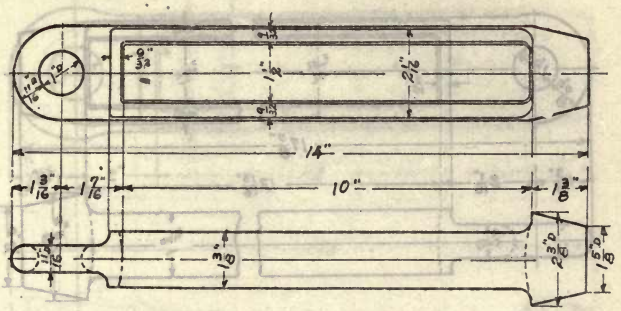

TURNBUCKLE SLEEVE, SCREW, RIGGING, 2″

Weight (steel), 5.5 lbs.

Die number, 2210-B
Former die number, (199)

NOT STANDARD STOCK

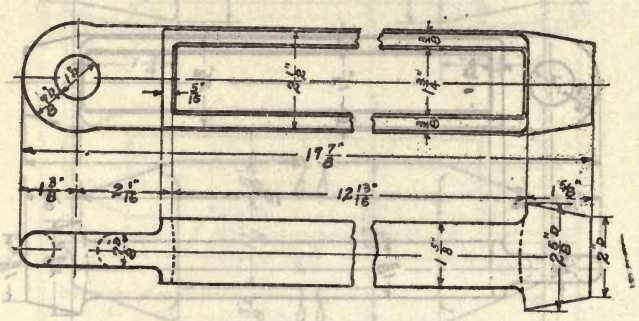

TURNBUCKLE SLEEVE, SCREW, RIGGING, 2 1/2″

Weight, lbs. **Die number, 2211-B**
Former die number, (200)

NOT STANDARD STOCK

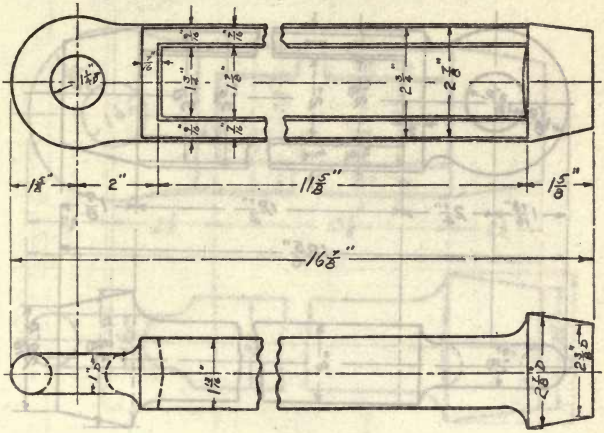

TURNBUCKLE SLEEVE, SCREW, RIGGING, 3″

Weight, lbs. **Die number, 2212-B**
Former die number, (132)

NOT STANDARD STOCK

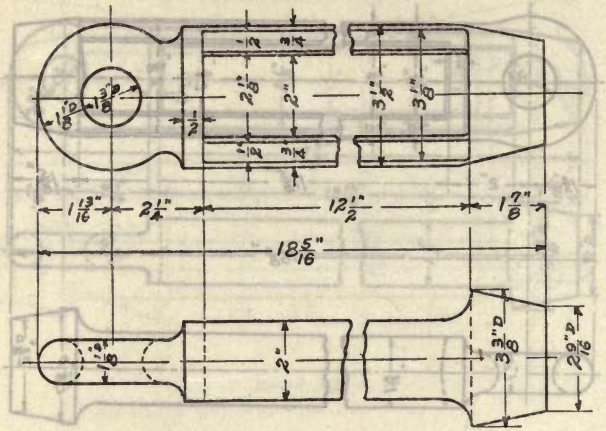

TURNBUCKLE SLEEVE, SCREW, RIGGING, 3 1/2″

Weight, **lbs.** **Die number, 2213-B**
Former die numbers, (202 & 203)

NOT STANDARD STOCK

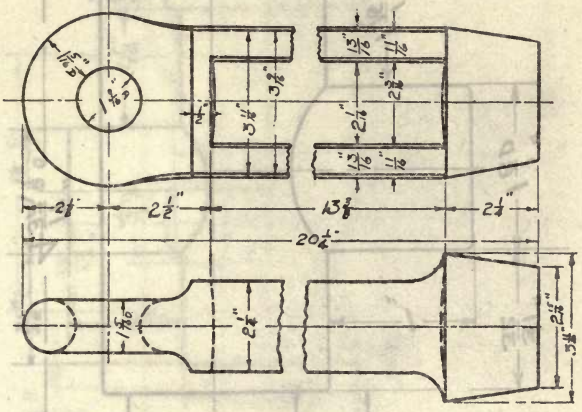

TURNBUCKLE SLEEVE, SCREW, RIGGING, 4″

Weight, lbs. **Die number, 2214-B**
Former die number, (133)

NOT STANDARD STOCK

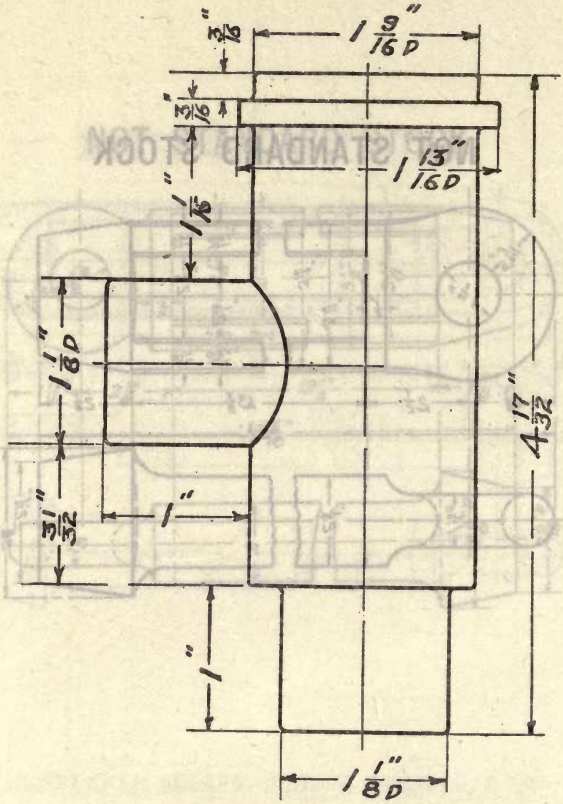

VALVE, ANGLE, HIGH PRESSURE, 1/2″

Weight (n. brass), 3.0 lbs. Die number, 2215-Y
Former die number, (384)

NOT STANDARD STOCK

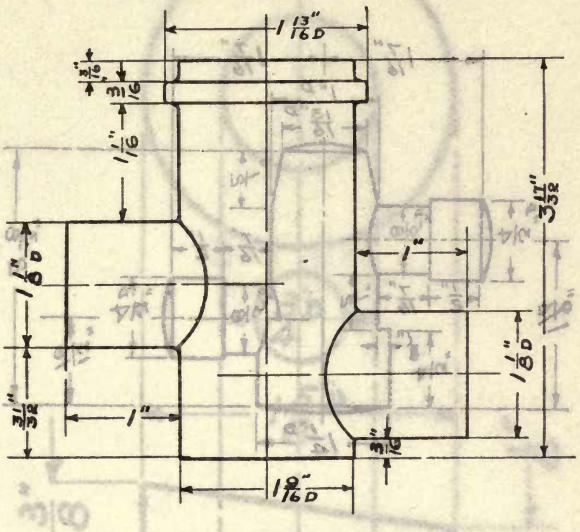

VALVE, STRAIGHTANGLE, HIGH PRESSURE, 1/2″

Weight (n. brass), 3.1 lbs. **Die number, 2216-Y**
Former die number, (385)

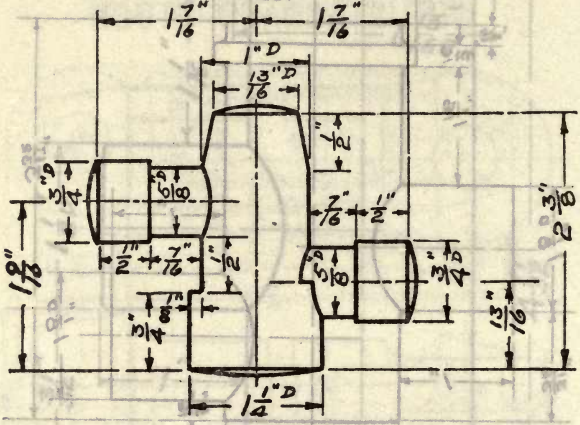

VALVE, STRAIGHTAWAY

Weight, lbs. **Die number, 2217-Y**
Former die number, (1139)

NOT STANDARD STOCK

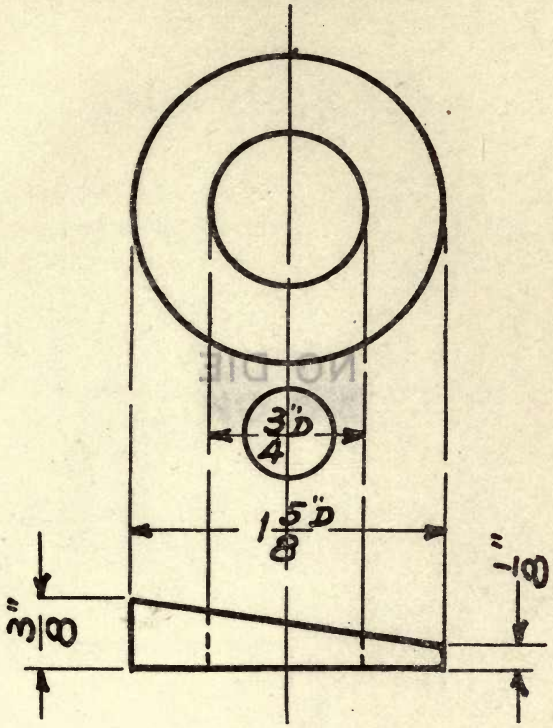

WASHER, 3/4″

For boat shop crane

Weight, lbs. **Die number, 2218-Y**
Former die number, (293)

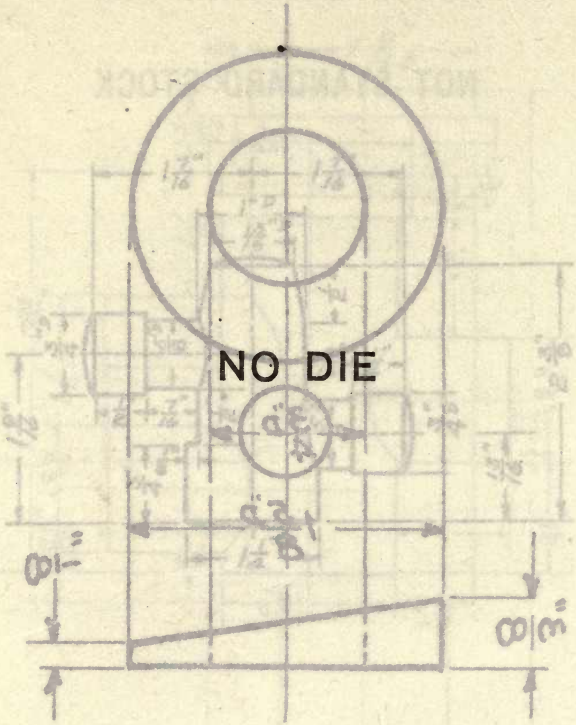

Die number, 2219-Y

NO DIE

Die number, 2220-Y

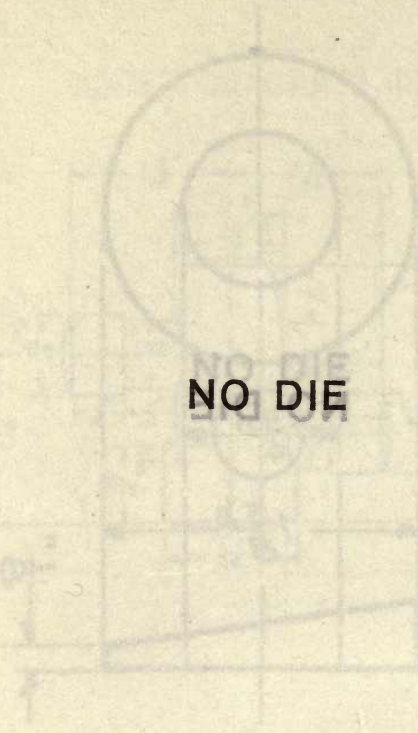

Die number, 2221-Y

Die number, 2222-Y

NOT STANDARD STOCK

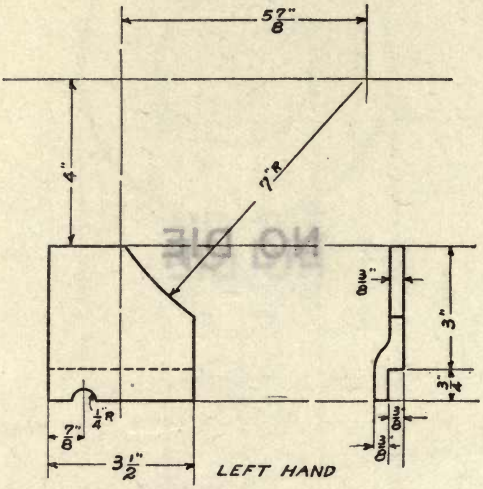

RIGHT HAND, SAME DIMENSIONS, BUT REVERSED

WEDGE, STOWAGE, SHELL, 14″

Weight, lbs.

Die number, 2223-Y
Former die number, (494)

NOT STANDARD STOCK

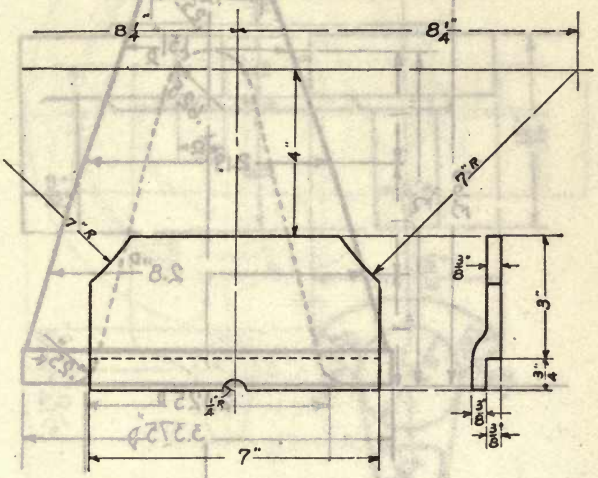

WEDGE, STOWAGE, SHELL, 14″

Weight, lbs. **Die number, 2224-Y**
Former die number, (495)

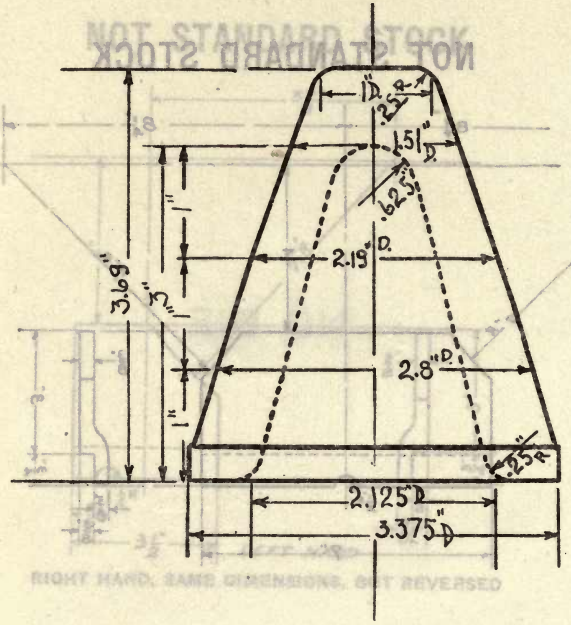

WINDSHIELD, PROJECTILE, 6″

Weight, lbs. **Die number, 2225-B**
Former die number, (538)

NOT STANDARD STOCK

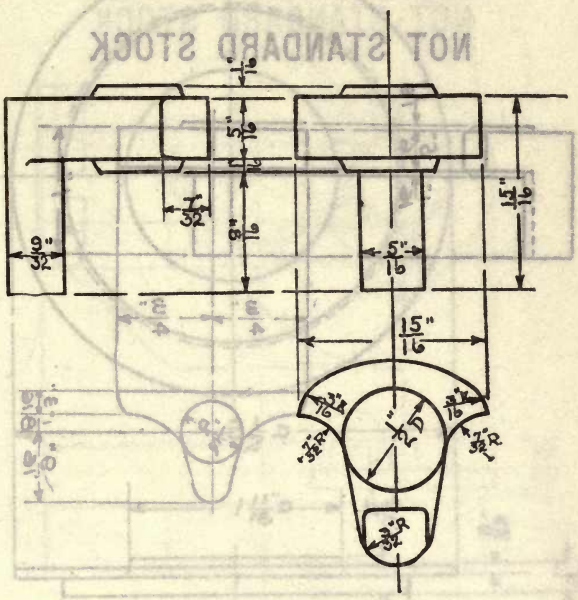

DOG, TELEGRAPH, AUTOMATIC

Weight, lbs. **Die number, 2226-Y**
Former die number, (1127-1)

NOT STANDARD STOCK

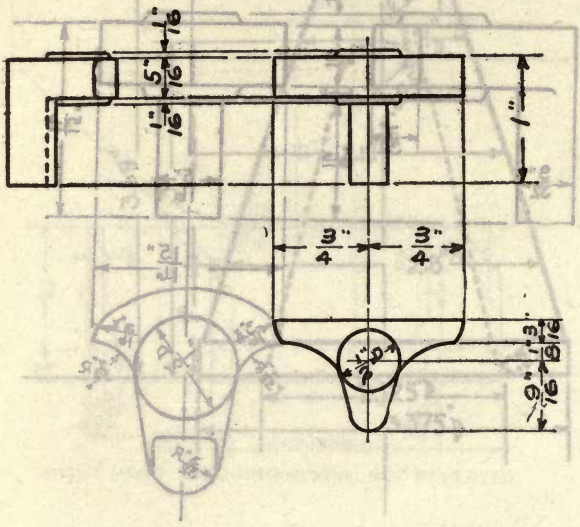

DOG, TELEGRAPH, AUTOMATIC

Weight, lbs. **Die number, 2227-M**
Former die number, (7-73)

NOT STANDARD STOCK

DIE No. 2228 SUPERSEDED BY DIE No. 3124

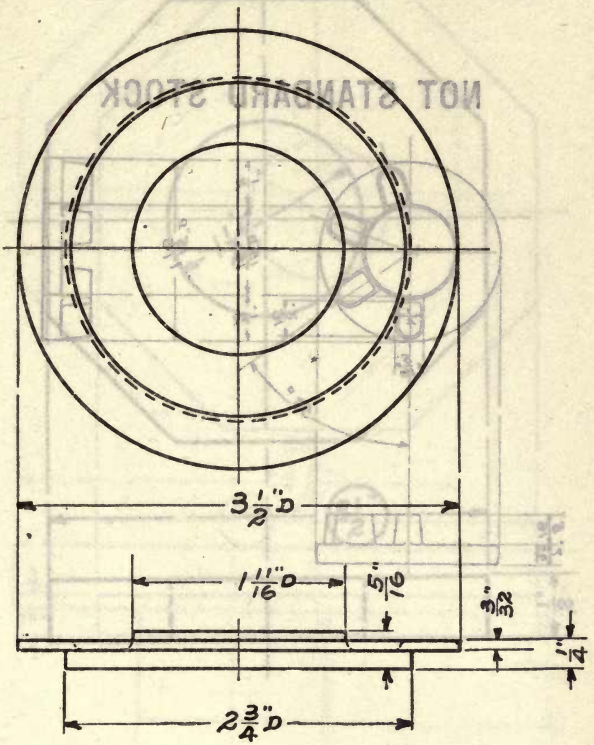

SHEAVE, TELEGRAPH, AUTOMATIC

Weight, lbs. **Die number, 2228-M**
Former die number, (7-74)

NOT STANDARD STOCK

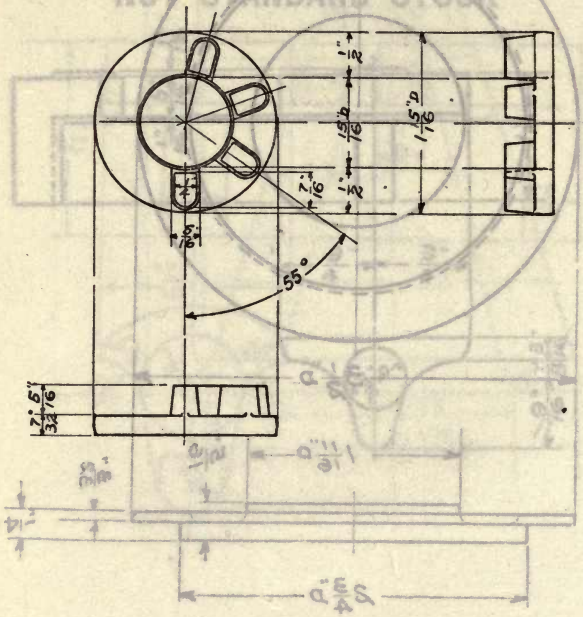

RING, TELEGRAPH, AUTOMATIC

Weight (steel), 0.38 lb. **Die number, 2229-Y**
Former die number, (1127-2)

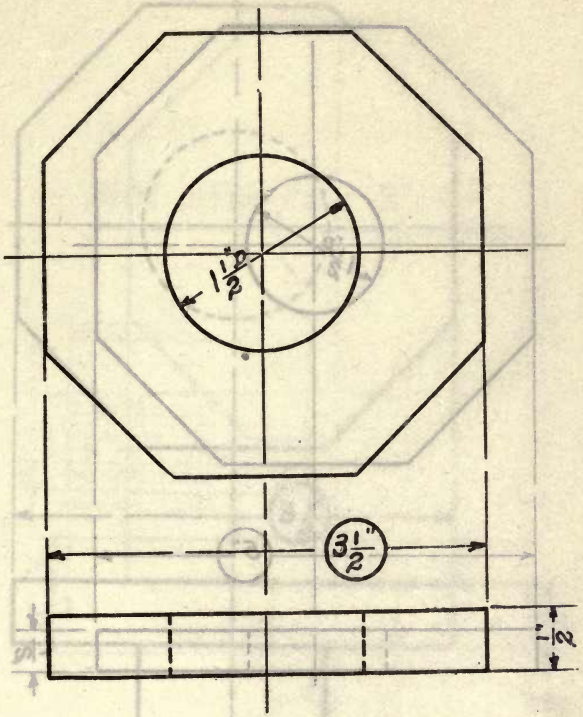

NUT, PLUG, PATCH, BULKHEAD, 3 1/2″

Weight, **lbs.** **Die number, 2230-M**
Former die number, (3-68)

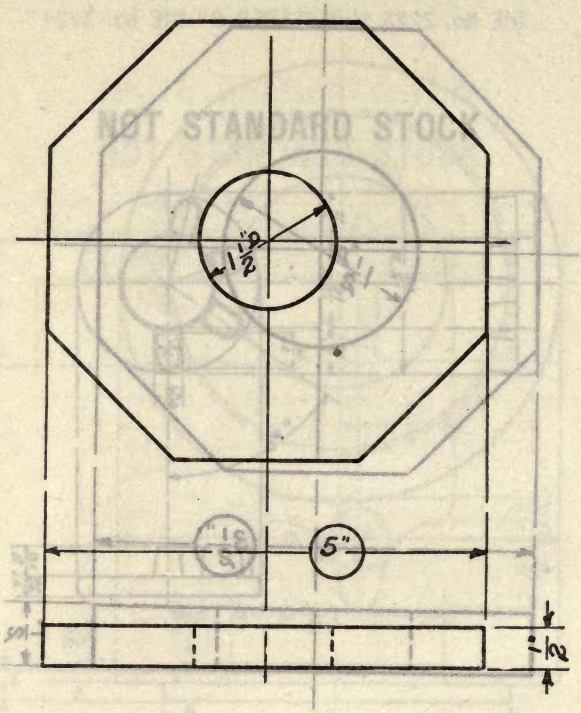

NUT, PLUG, PATCH, BULKHEAD, 5″

Weight, lbs. Die number, 2231-M
Former die number, (3-69)

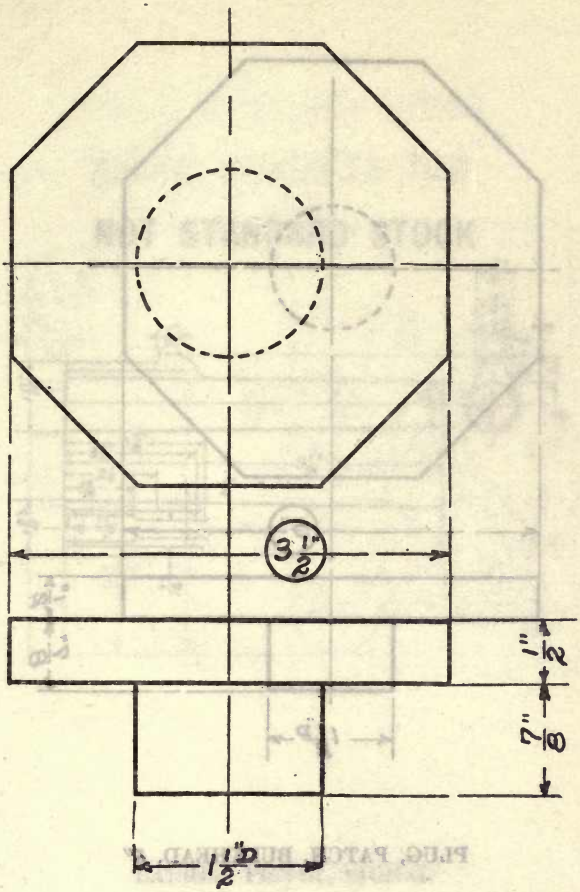

PLUG, PATCH, BULKHEAD, 3 1/2″

Weight, **lbs.** **Die number, 2232-M**
Former die number, (3-66)

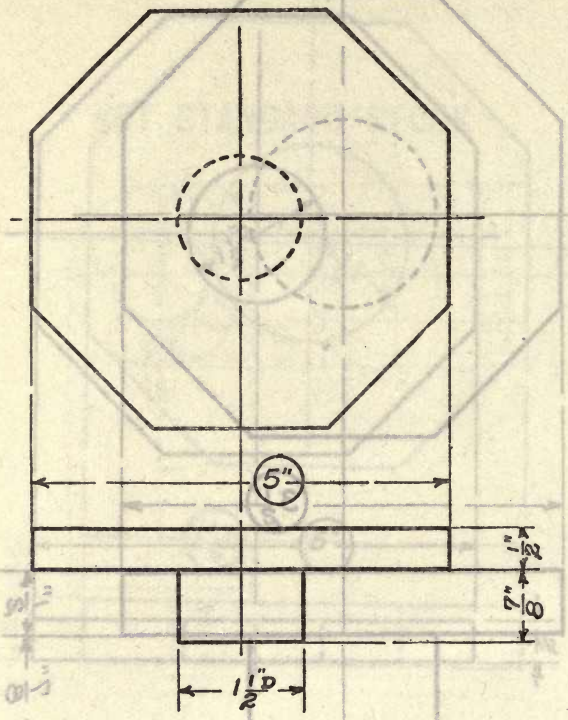

PLUG, PATCH, BULKHEAD, 5″

Weight, **lbs.** **Die number, 2233-M**
Former die number, (3-67)

NOT STANDARD STOCK

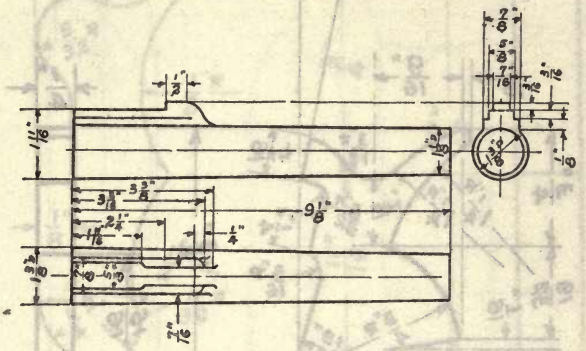

BARREL, PISTOL, SIGNAL

Weight (steel), 3.41 lbs. **Die number, 2234-Y**
Former die number, (422)

NOT STANDARD STOCK

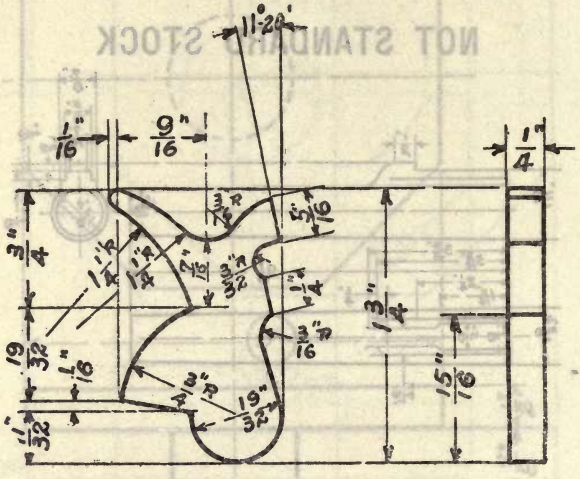

HAMMER, PISTOL, SIGNAL

Weight, lbs. **Die number, 2235-Y**
Former die number, (1124)

NOT STANDARD STOCK

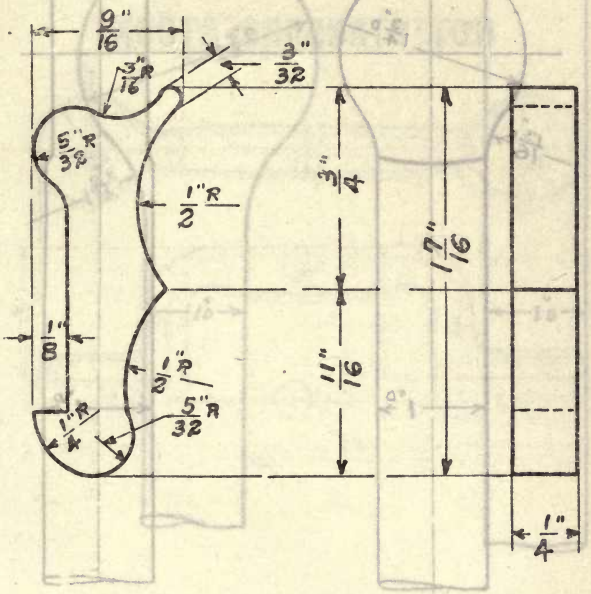

TRIGGER, PISTOL, SIGNAL

Weight, lbs. Die number, 2236-Y
Former die number, (1125)

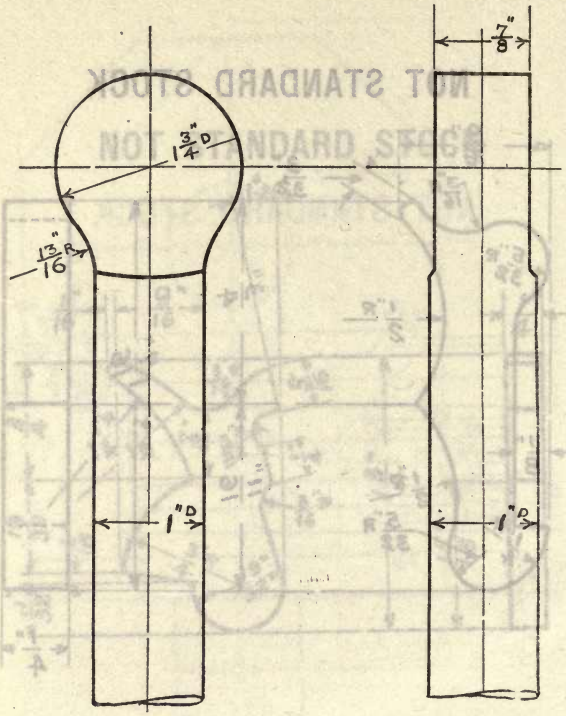

BOLT, DROP, 1″

Head, 7/8″ x 1 3/4″ D. Length, open die

Weight, lbs. Die number, 2237-N
Former die number, (3-45)

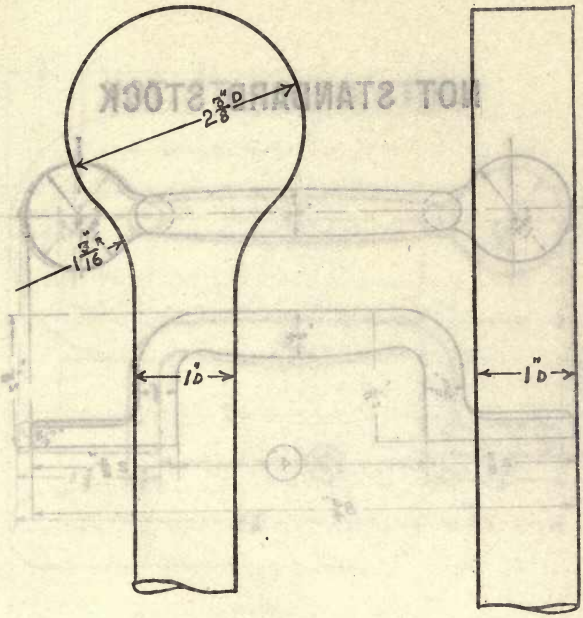

BOLT, DROP, 1″

Head, 1″ x 2 3/8″ Length, open die

Weight, lbs. Die number, 2238-N
Former die number, (3-44)

NOT STANDARD STOCK

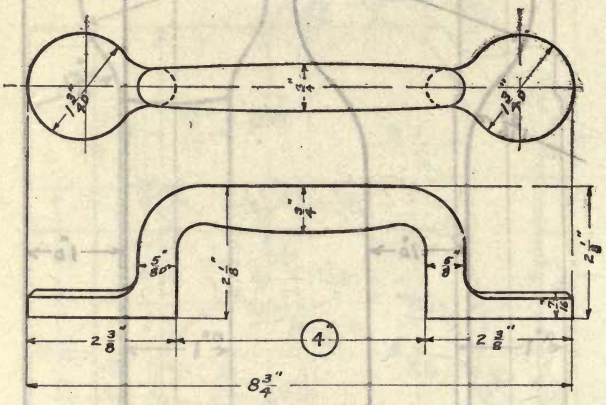

HANDLE, GRAB, 4″

Height, 2 1/8″ Size of wire, 3/4″

Weight (steel), lbs. Die number, 2239-YM
Former die numbers, (111) (3-1)

NOT STANDARD STOCK

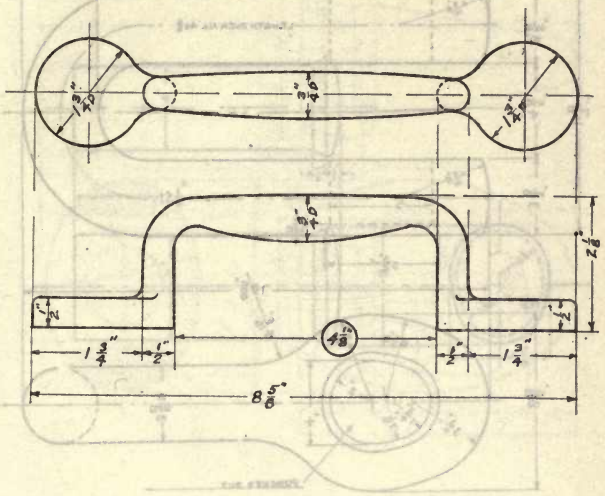

HANDLE, GRAB, 4 1/8″

Height, 2 1/8″ **Size of wire, 3/4″**

Weight (steel), **lbs.** **Die number, 2240-B**
Former die number, (40)

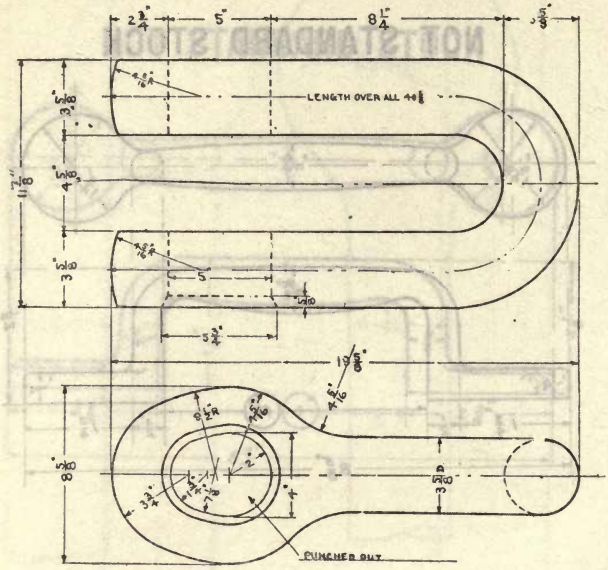

SHACKLE, CONNECTING, 3 1/4″ CHAIN CABLE

Weight (steel), **lbs.** **Die number, 3000-B**

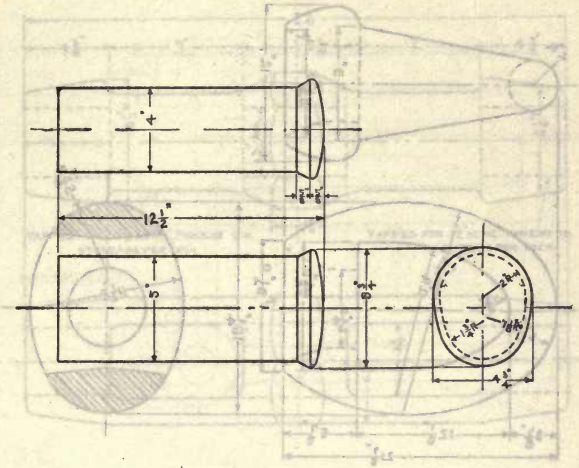

PIN, SHACKLE, CONNECTING, 3 1/4″ CHAIN CABLE

Weight (steel), lbs. **Die number, 3001-B**

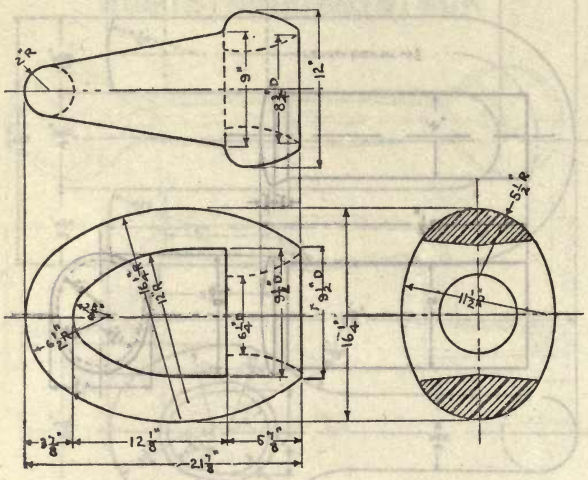

BOX, SWIVEL, 3 1/4″ AND 3 1/2″ CHAIN CABLE

Weight (steel), lbs. **Die number, 3002-B**

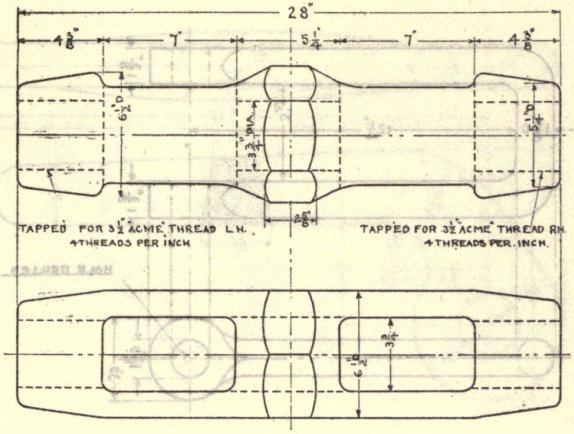

TURNBUCKLE, 3 1/2″

For housing chain stopper, for 3 1/4″ and 3 1/2″ chain cable.

Weight (steel), lbs. **Die number, 3003-B**

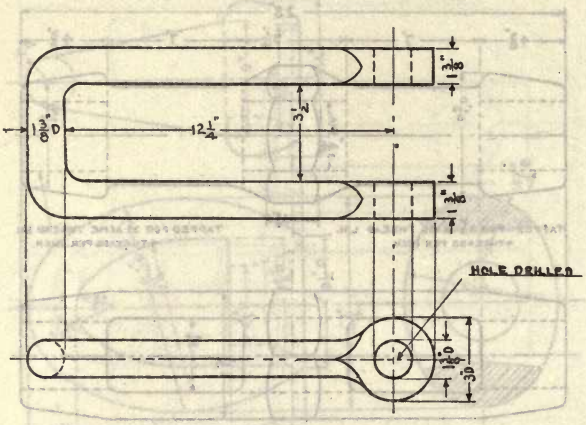

BAIL, 3 1/4″ AND 3 1/2″ CHAIN CABLE

For housing chain stopper, for 3 1/4″ and 3 1/2″ chain cable

Weight (steel), lbs. Die number, 3004-B

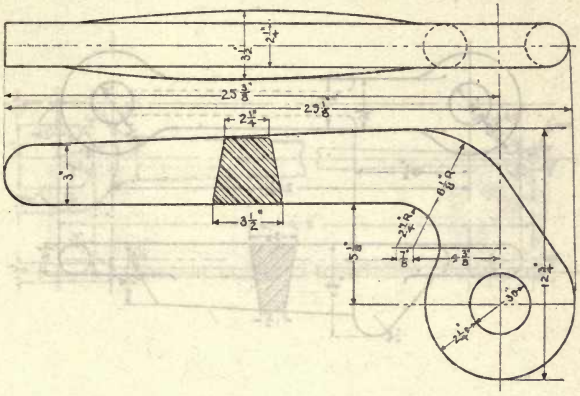

HOOK, PELICAN, 3 1/4″ AND 3 1/2″ CHAIN CABLE

For housing chain stopper for 3 1/4″ and 3 1/2″ chain cable

Weight (steel), lbs. **Die number, 3005-B**

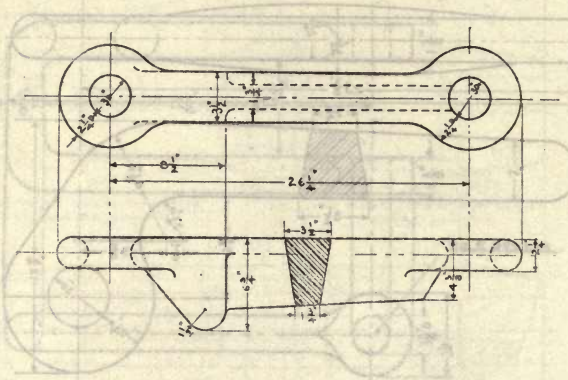

STRONGBACK, HOUSING CHAIN STOPPER

For 3 1/4" and 3 1/2" chain cable

Weight (steel), lbs. **Die number, 3006-B**

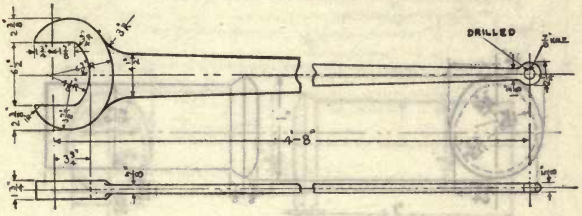

WRENCH, 6 1/2″

For housing chain stopper, for 3 1/4″ and 3 1/2″ chain cable.

Weight (steel), lbs. **Die number, 3007-B**

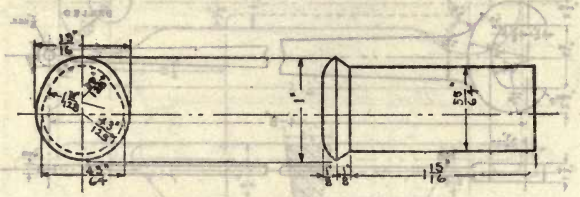
13/16
1 1/2
1 1/2
1 1/2

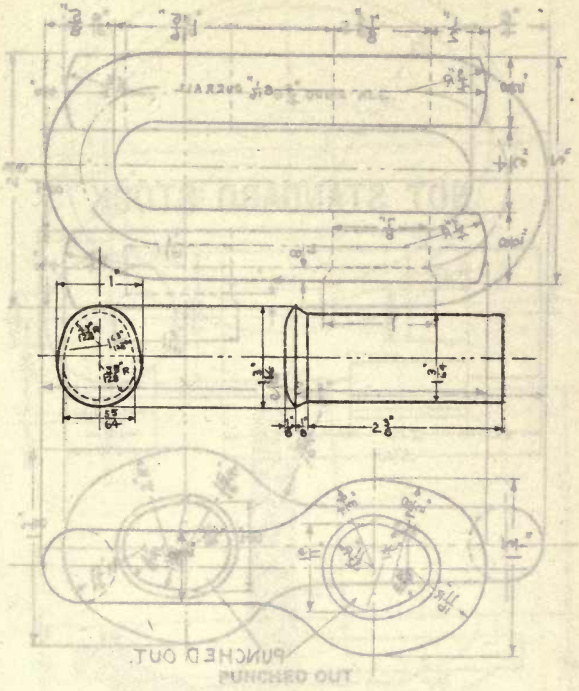

PIN, SHACKLE, CONNECTING, 5/8″ CHAIN CABLE

Weight (steel), lbs. **Die number, 3009-B**

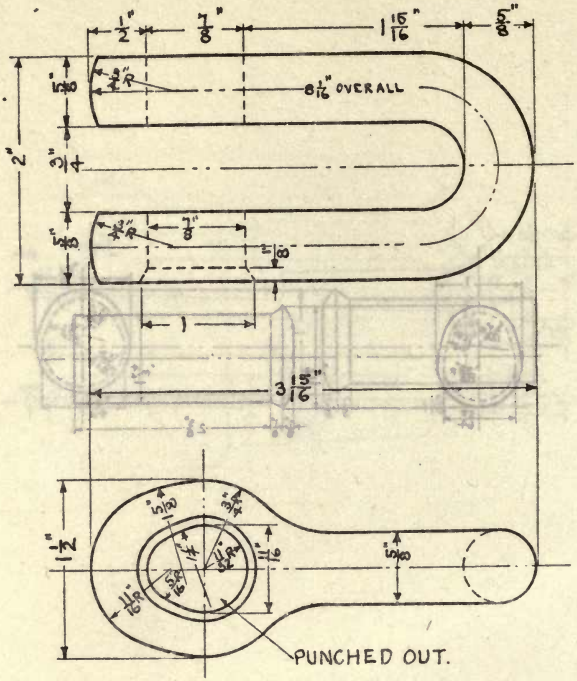

SHACKLE, CONNECTING, 1/2″ CHAIN CABLE

Weight (steel), lbs. **Die number, 3010-B**

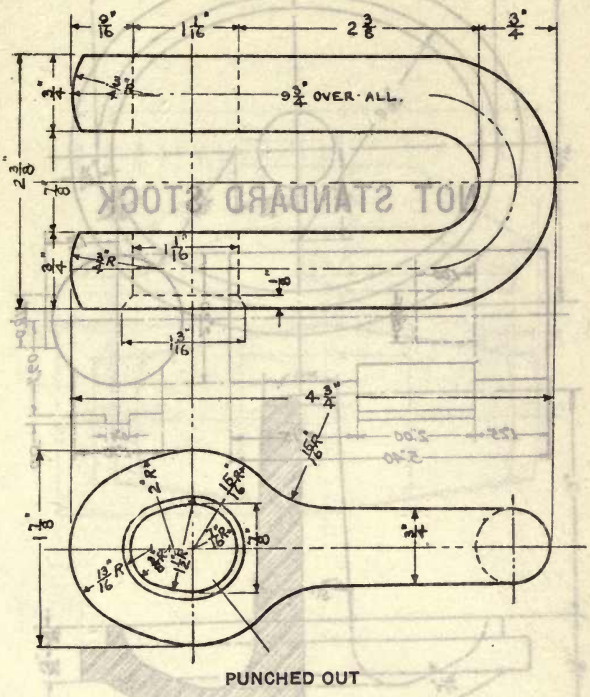

SHACKLE, CONNECTING, 5/8" CHAIN CABLE

Weight (steel), lbs. **Die number, 3011-B**

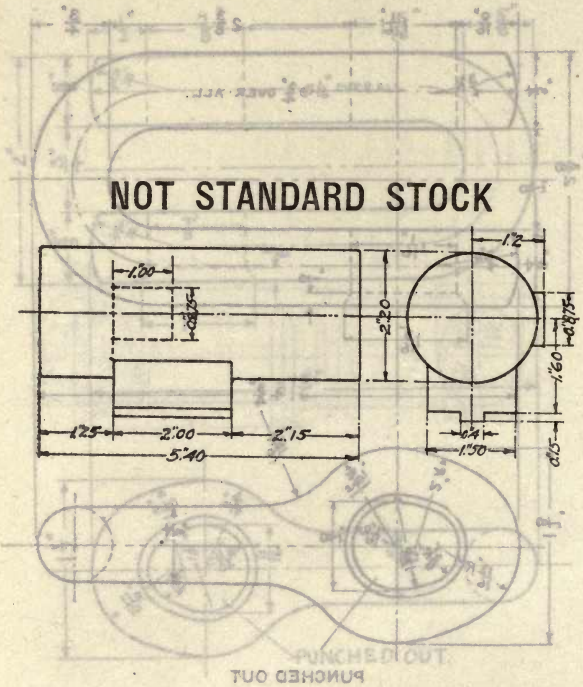

HOUSING, DOTTER, SOLENOID

Weight (w. iron), 6.75 lbs. **Die number, 3012-M**

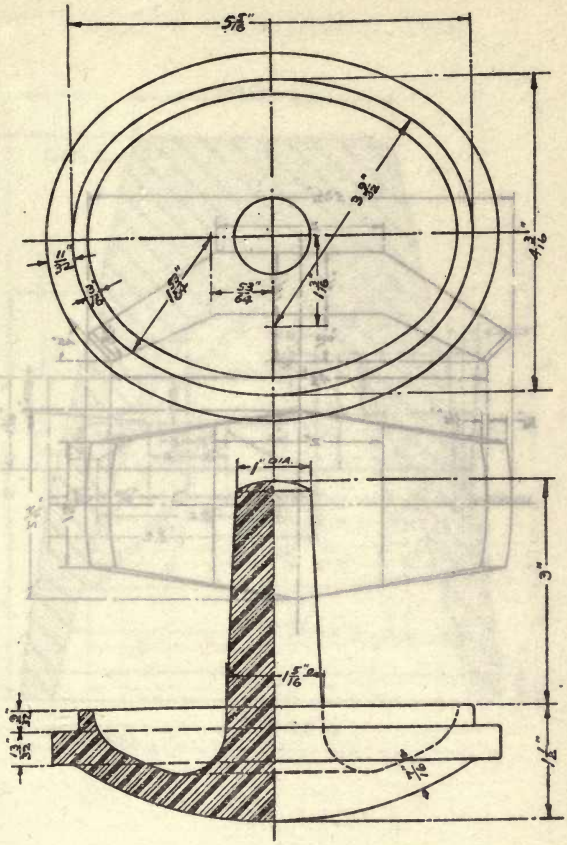

COVER, HANDHOLE, OVAL, 5 5/16″ x 4 3/16″

Weight (steel), 5.4 lbs. **Die number, 3013-M**

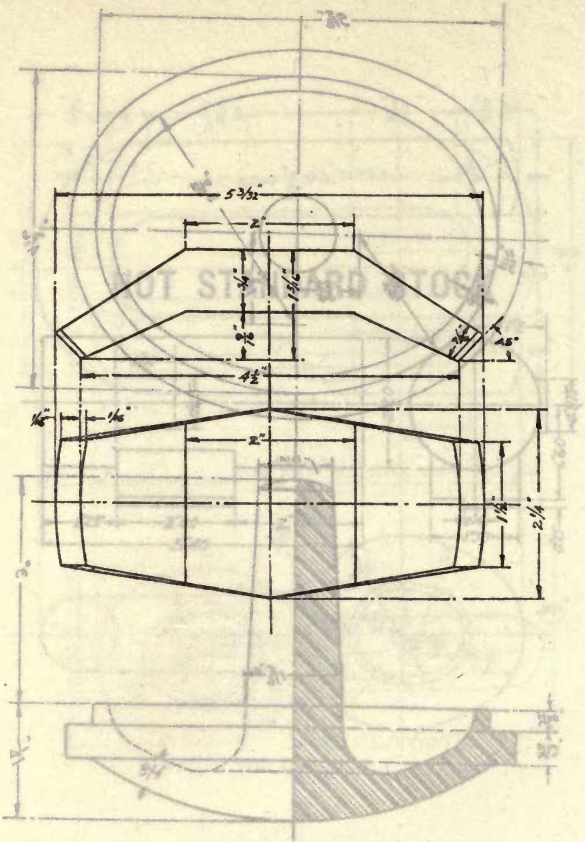

BRIDGE, CLAMPING, 5 3/32″

For boiler handhole covers

Weight (steel), 1.6 lbs. **Die number, 3014-M**

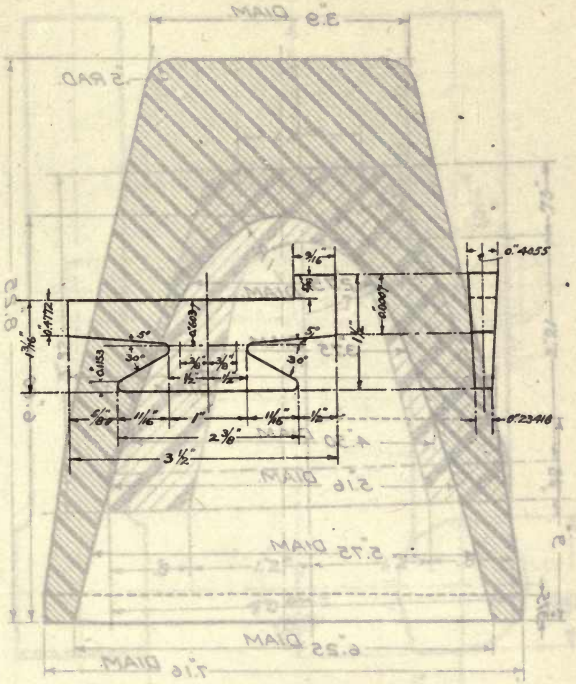

SEGMENT, COMMUTATOR

Weight (copper), 0.55 lb. **Die number, 3015-M**

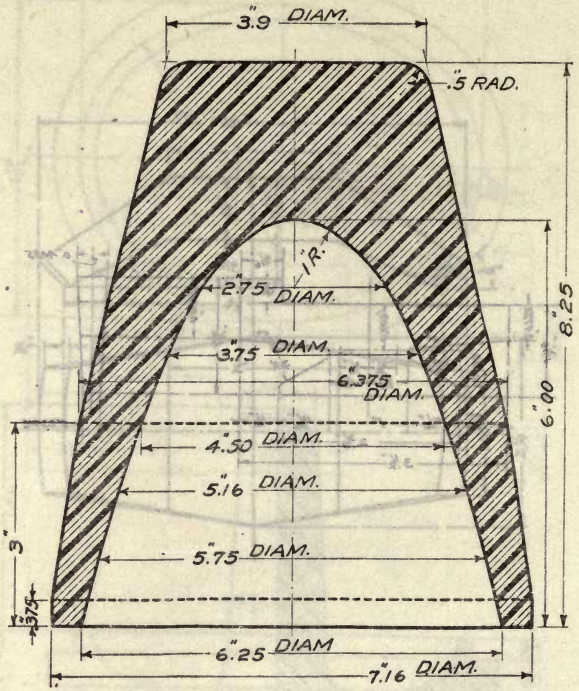

CAP, PROJECTILE, A. P. 8″

Weight (steel), 36 lbs. **Die number, 3016-M**

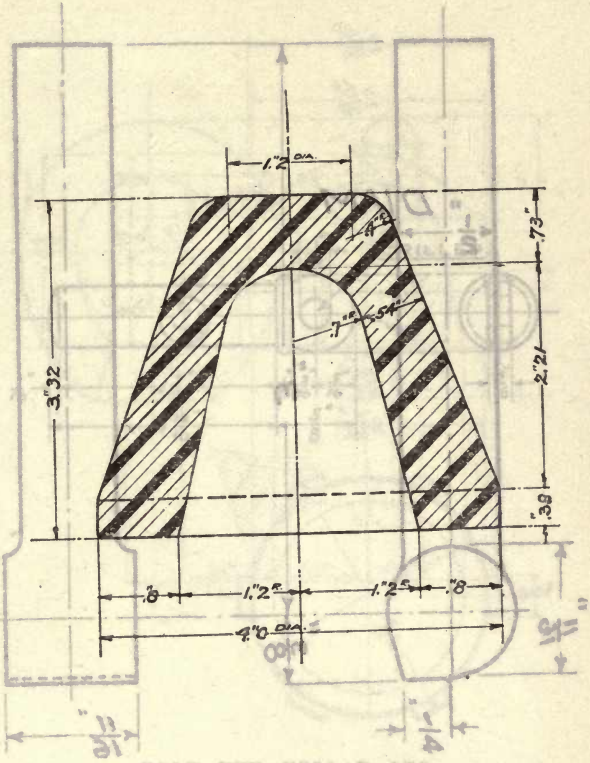

WINDSHIELD, PROJECTILE, A. P. 8″

Weight (steel), 6.5 lbs. **Die number, 3017-M**

NOT STANDARD STOCK

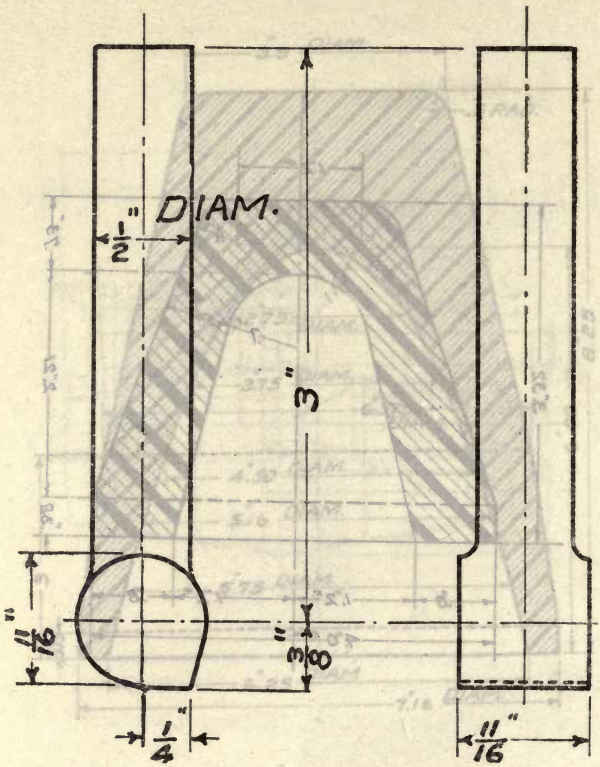

BOLT, DROP, 1/2″

Head, 11/16″ x 11/16″ Length, 3″

Weight (n. brass), lbs. Die number, 3018-M

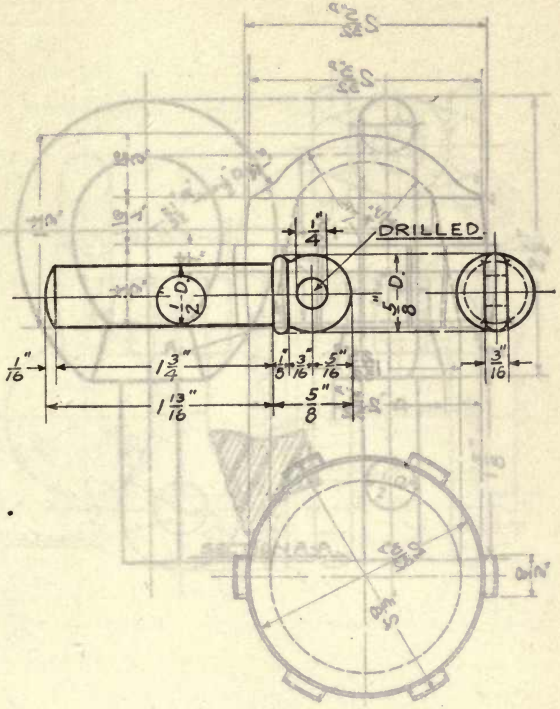

BOLT, EYE, COLLAR, 1/2″

Eye, 1/4″ Length, 1 13/16″

For use as pin for swivel shackle for U. S. N. D. mines

Weight (steel), 0.25 lb. **Die number, 3019-N**

NOT STANDARD STOCK

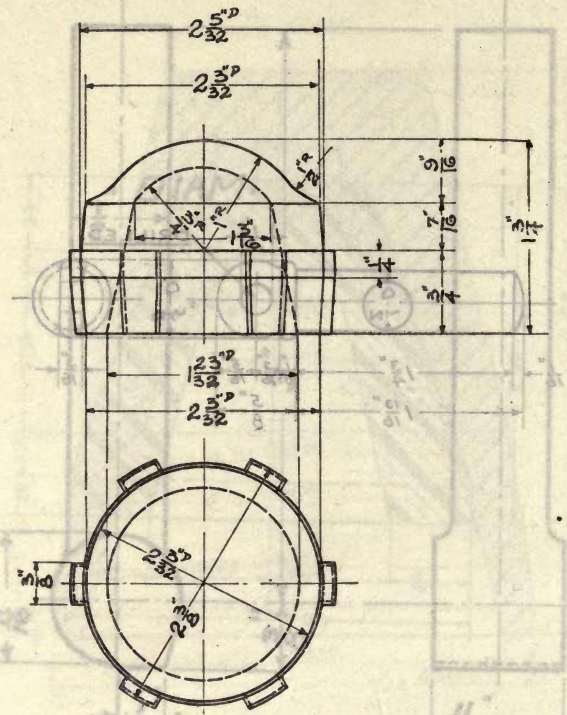

CAP, BOILER, LAUNCH

Weight (steel), lbs. **Die number, 3023-N**

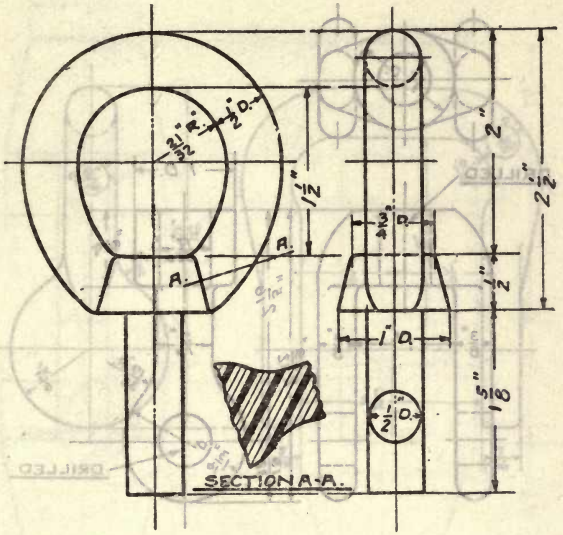

EYE, SWIVEL, 1/2″

For use with swivel shackle for U. S. N. D. mines

Weight (steel), 0.50 lb. **Die number, 3021-N**

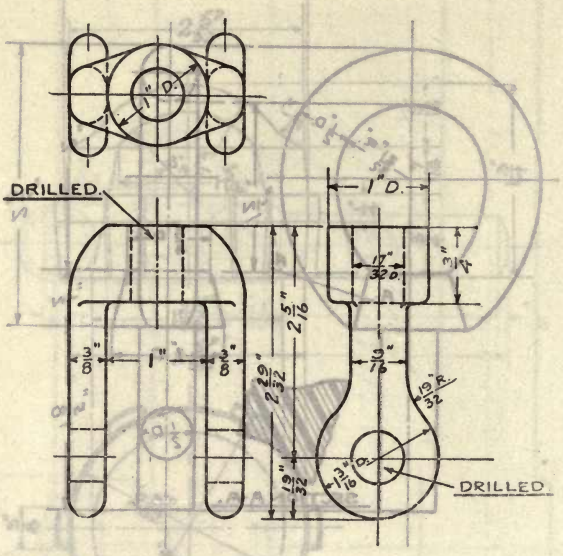

SHACKLE, SWIVEL

For use with U. S. N. D. mines

Weight (steel), 0.50 lb. **Die number, 3022-N**

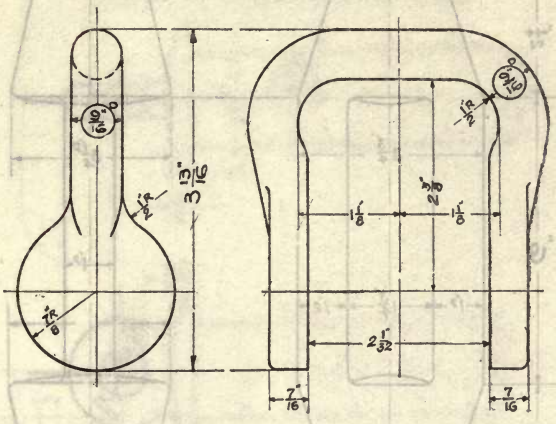

SHACKLE, 9/16″

Used with awning, rail, and life line stanchions

Weight (steel), lbs. **Die number, 3023-YM**

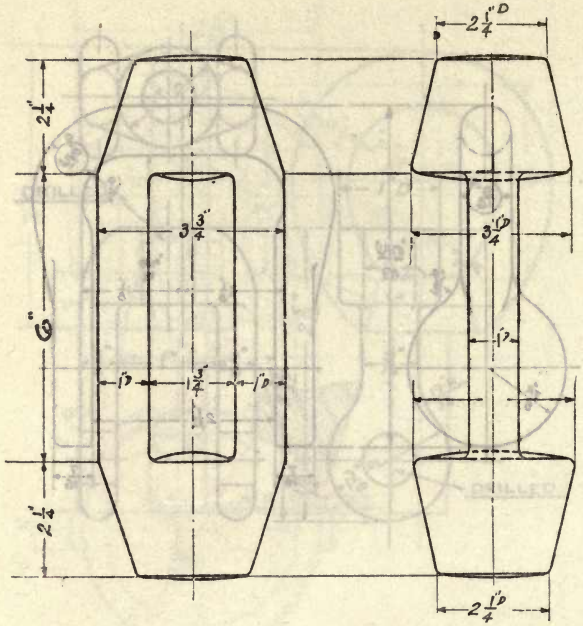

TURNBUCKLE, 1 3/8″

Weight (steel), lbs. **Die number, 3024-Y**

NOT STANDARD STOCK

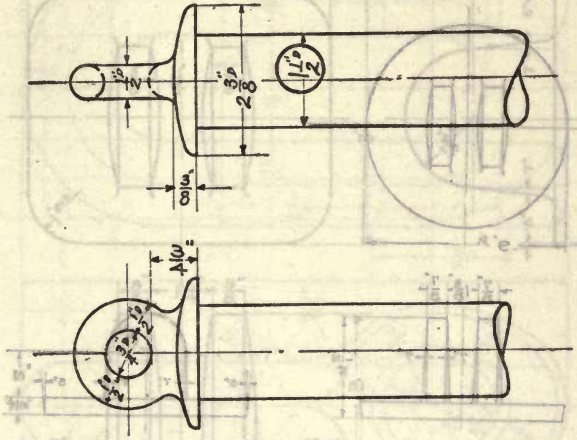

BOLT, EYE, COLLAR, 1 1/2″

Eye, 3/4″ D. Length, open die

Weight (steel), lbs. Die number, 3025-YM

NOT STANDARD STOCK

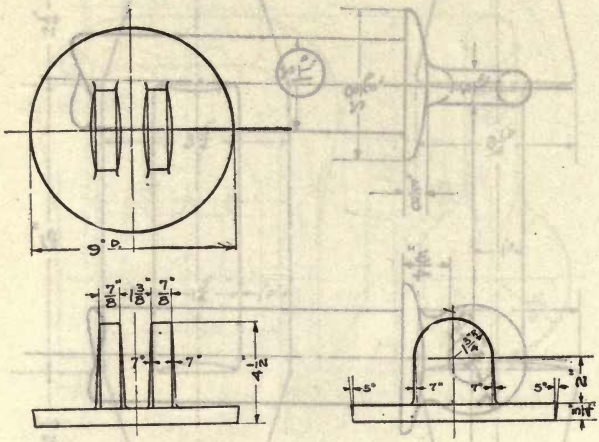

PAD, STRUT

Used with boat stowage fittings

Weight (steel), lbs. Die number, 3026-Y

NOT STANDARD STOCK

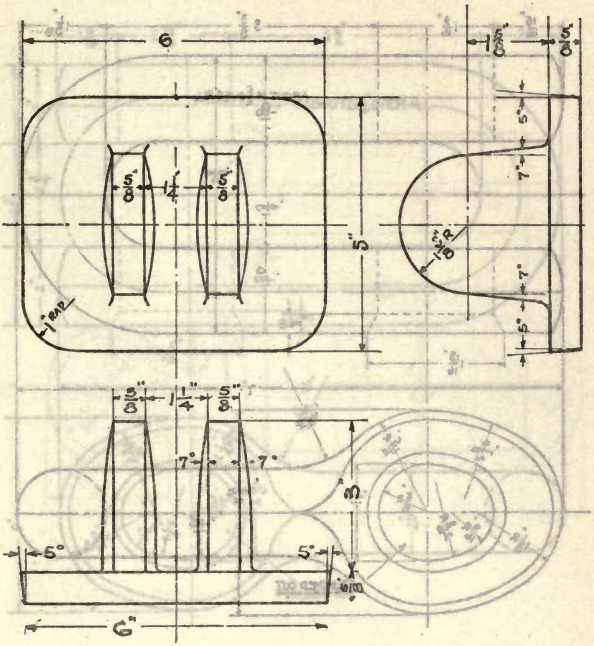

PAD, ROD, STAY

Used with boat stowage fittings

Weight (steel), lbs. **Die number, 3027-Y**

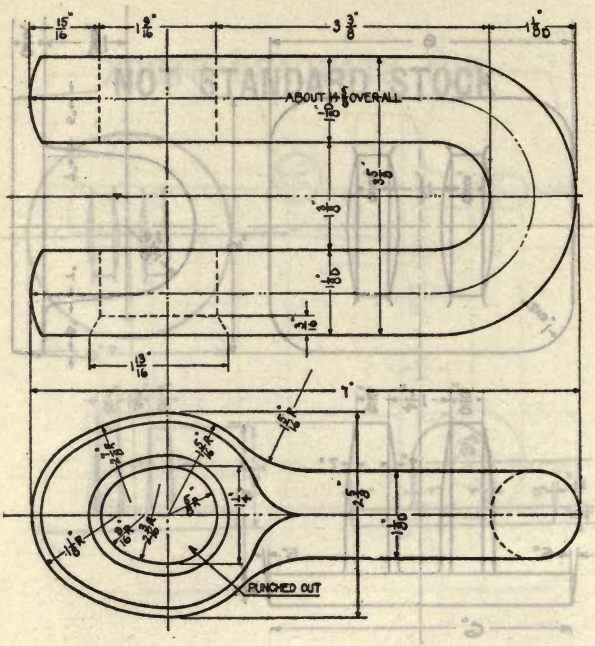

SHACKLE, CONNECTING, 1″ CHAIN CABLE

Weight (steel), 5.8 lbs. **Die number, 3028-B**

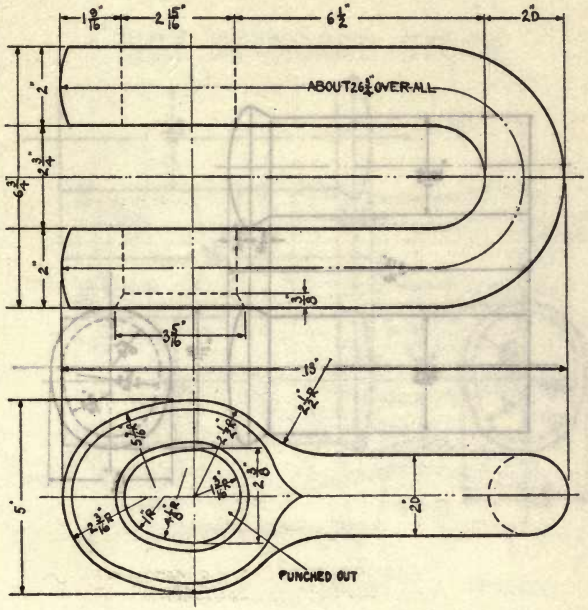

SHACKLE CONNECTING, 1 3/4″ CHAIN CABLE

Weight (steel), 34.0 lbs. **Die number, 3029-B**

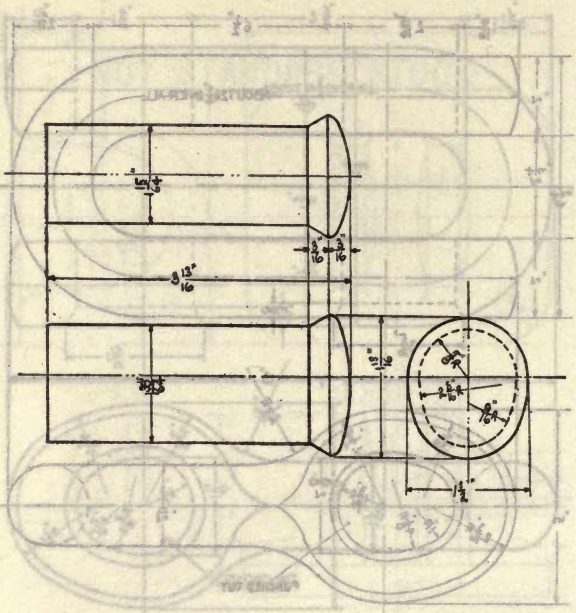

PIN, SHACKLE, CONNECTING, 1″ CHAIN CABLE

Weight (steel), 2.0 lbs. **Die number, 3030-B**

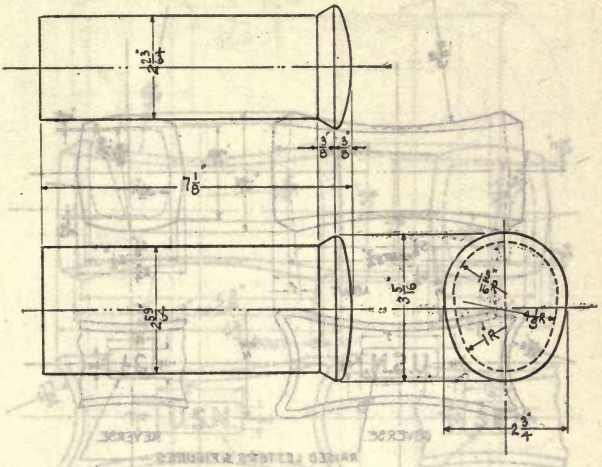

PIN, SHACKLE, CONNECTING, 1 3/4″ CHAIN CABLE

Weight (steel), 10.8 lbs. **Die number, 3031-B**

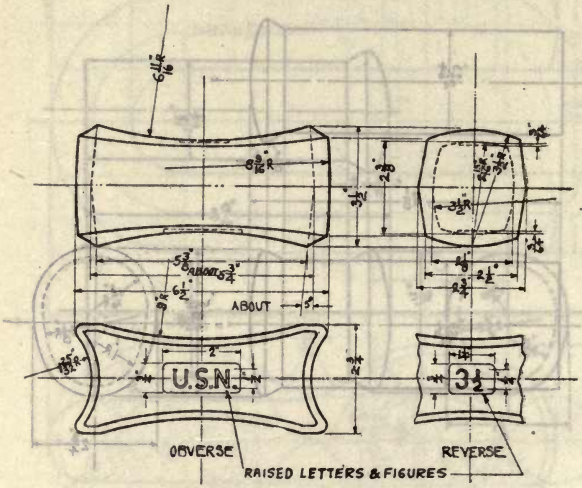

STUD, CHAIN, 3 1/2″

Weight, lbs. **Die number 3032-B**

NOT STANDARD STOCK

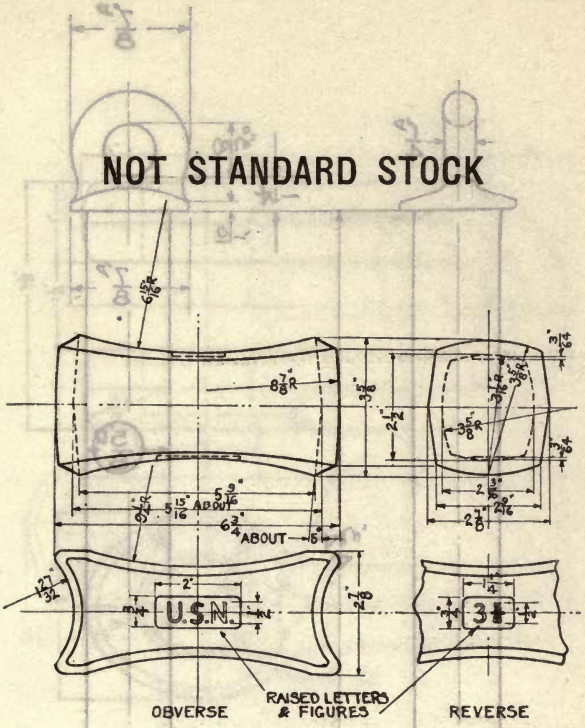

STUD, CHAIN, 3 5/8″

Weight, lbs. **Die number, 3033-B**

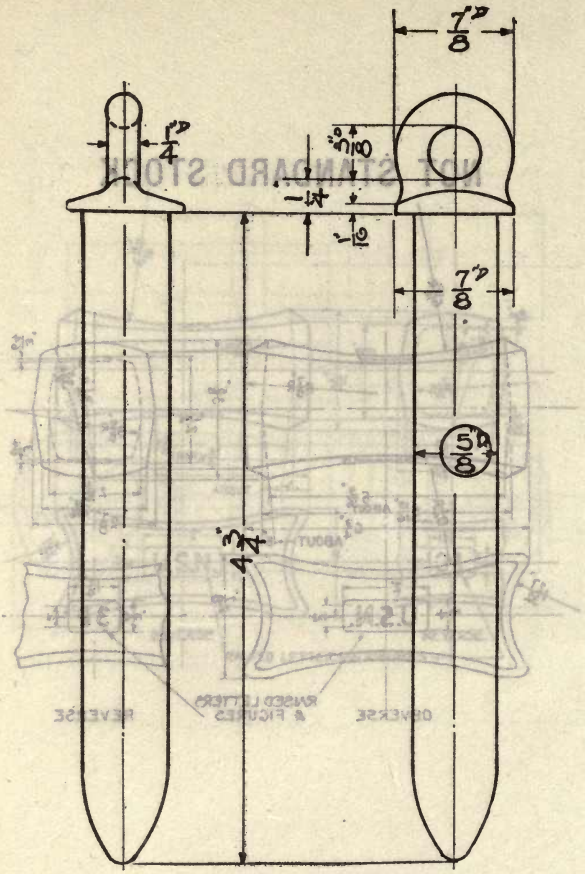

PIN, THWART, 5/8″ D.

Weight (steel), lbs. Die number, 3034-Y

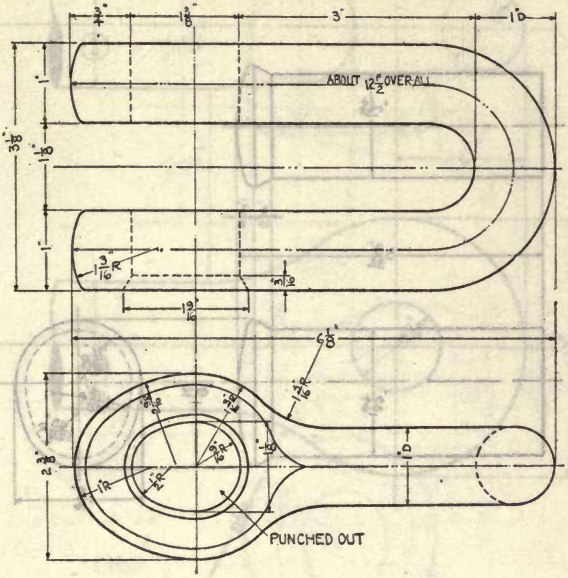

SHACKLE, CONNECTING, 7/8″ CHAIN CABLE.

Weight (steel), lbs. **Die number, 3035-B**

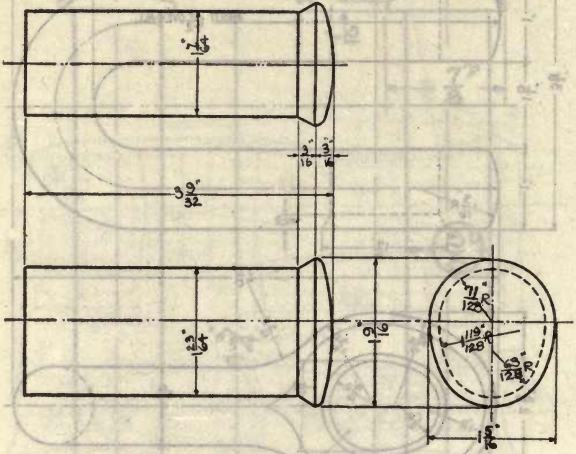

PIN, SHACKLE, CONNECTING, 7/8″ CHAIN CABLE

Weight (steel), lbs. **Die number, 3036-B**

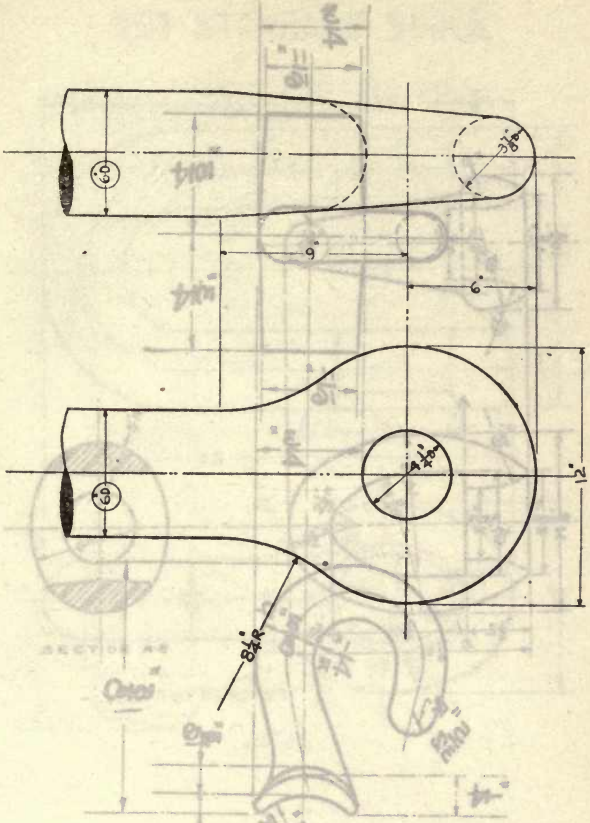

BOLT, EYE, 6″

Eye, 4 1/4″ **Length, open die**

Weight (steel), lbs. **Die number, 3037-B**

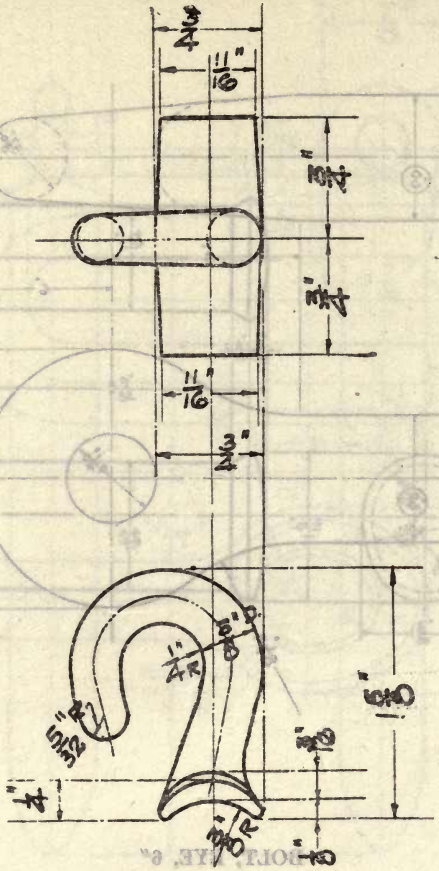

HOOK, LACING, AWNING

Weight, 0.17 lb. **Die number, 3038-Y**

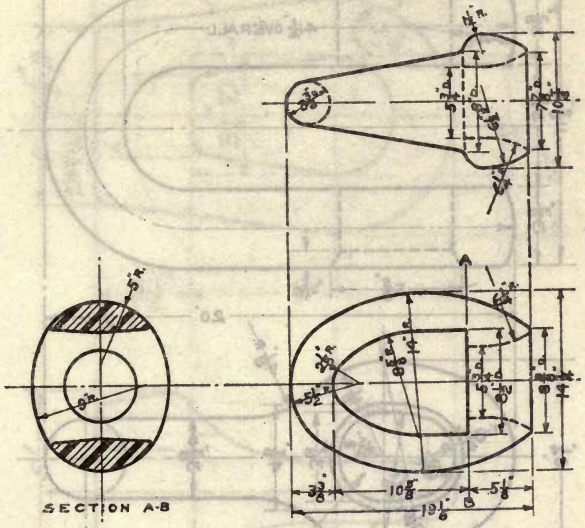

BOX, SWIVEL, 2 3/4″ AND 3″ CHAIN CABLE.

Weight (steel), **lbs.** **Die number, 3039-B**

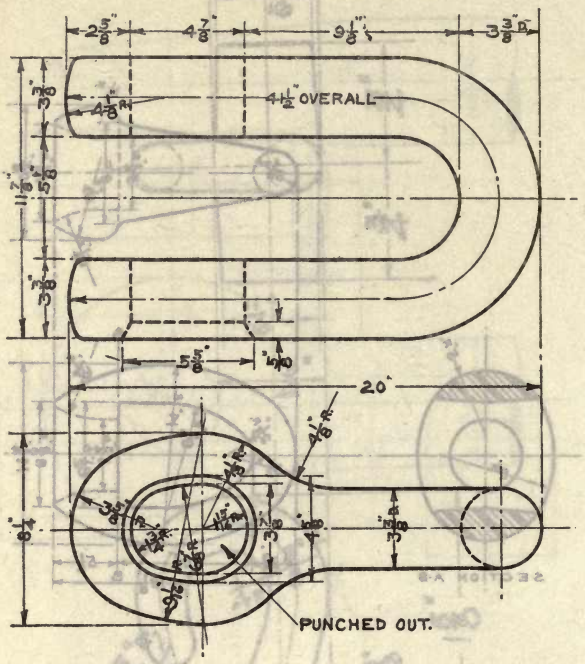

SHACKLE, BENDING, 2 3/4″ CHAIN CABLE

Weight, lbs. **Die number, 3040-B**

NOT STANDARD STOCK

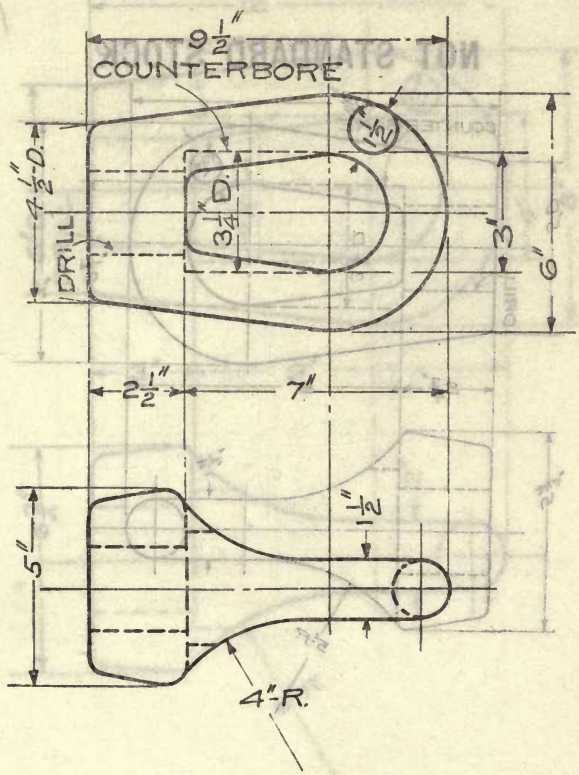

BOX, SWIVEL, 1 1/2″

Weight (steel), 9.50 lbs. **Die number, 3041-N**

NOT STANDARD STOCK

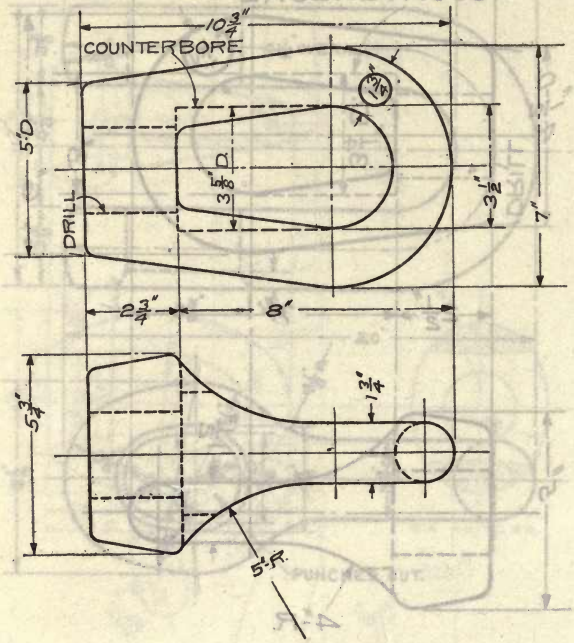

BOX, SWIVEL, 1 3/4″

Weight (steel), 16.75 lbs. **Die number, 3042-N**

NOT STANDARD STOCK

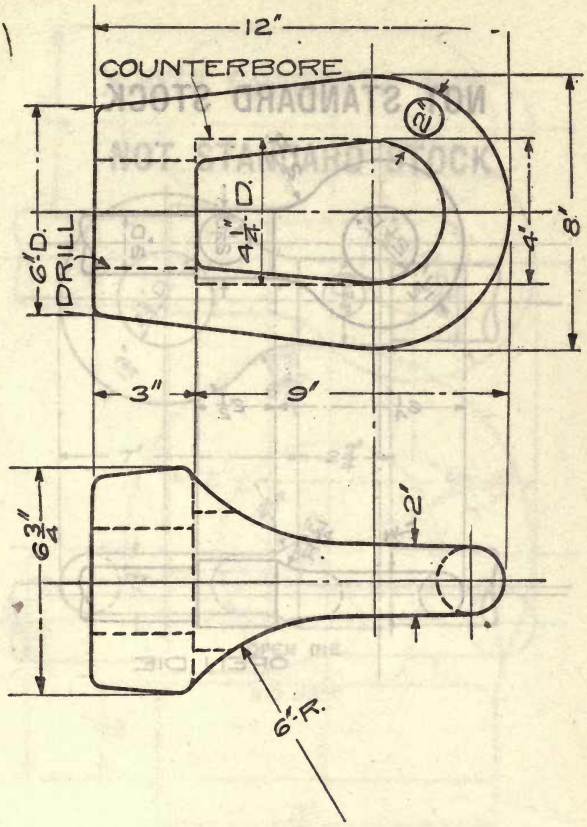

BOX, SWIVEL, 2″

Weight (steel), 21.25 lbs. **Die number, 3043-N**

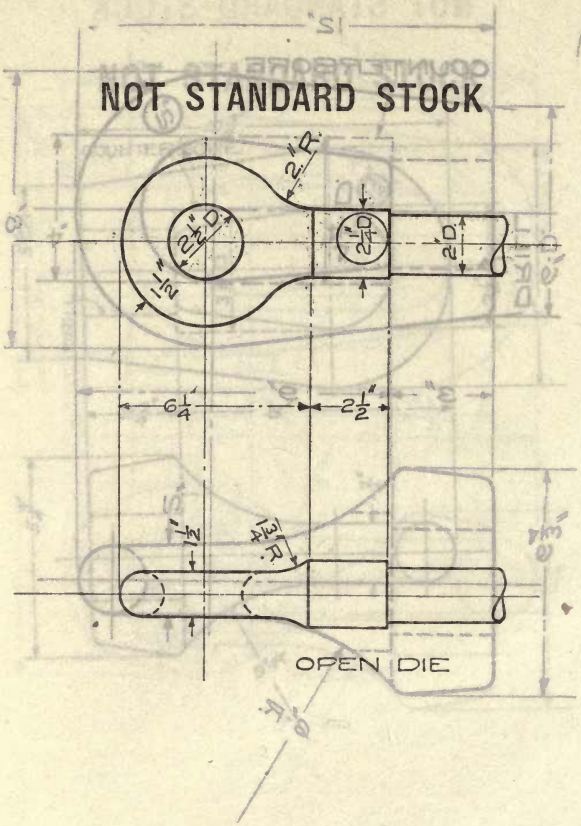

EYE, SWIVEL, 2 1/4″

Weight (steel), 8.75 lbs. **Die number, 3044-N**

NOT STANDARD STOCK

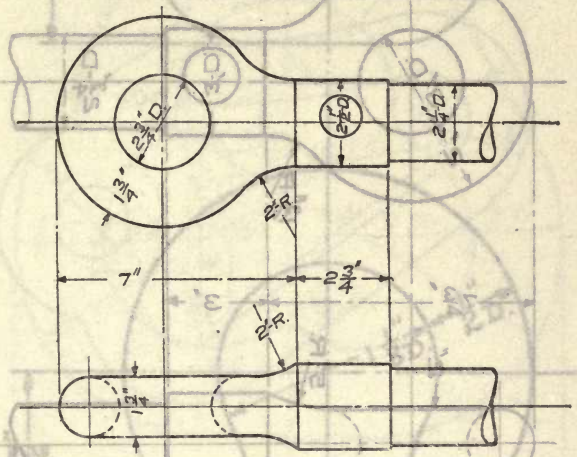

EYE, SWIVEL, 2 1/2″

Weight (steel), 15.25 lbs. Die number, 3045-N

NOT STANDARD STOCK

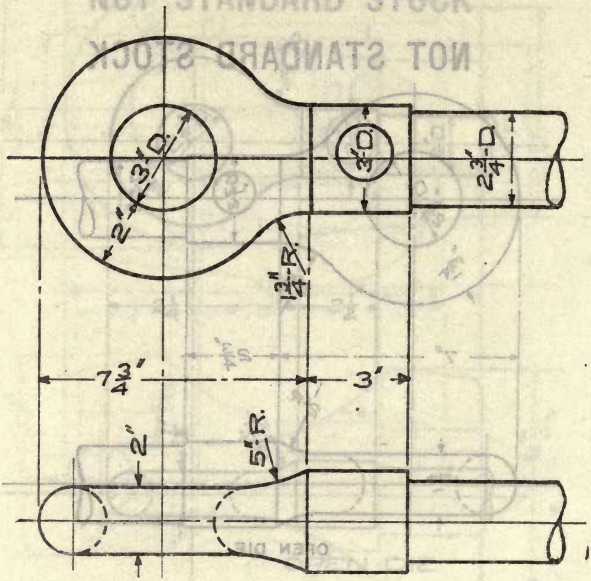

OPEN DIE

EYE, SWIVEL, 3″

Weight (steel), 20.0 lbs. **Die number, 3046-N**

NOT STANDARD STOCK

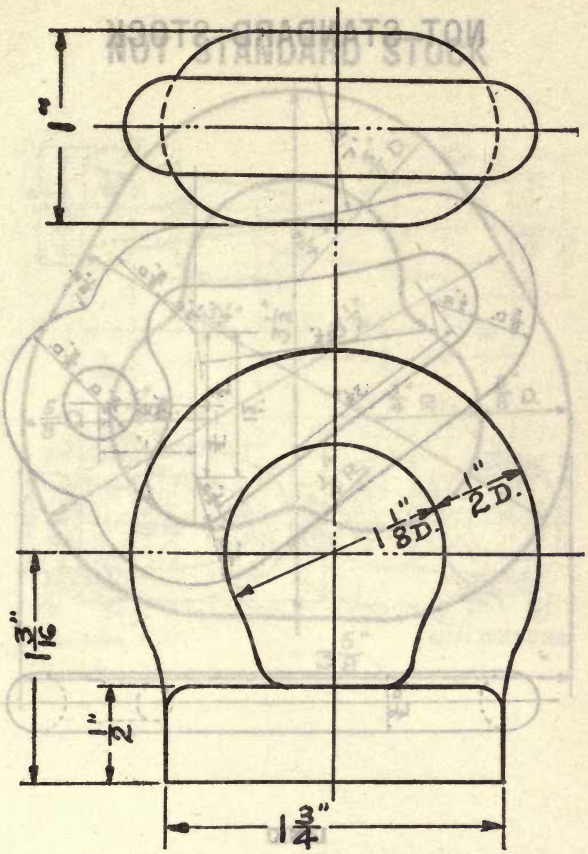

EYE, STANCHION, AWNING

For small boats

Weight (steel), 0.75 lb. Die number, 3047-P

NOT STANDARD STOCK

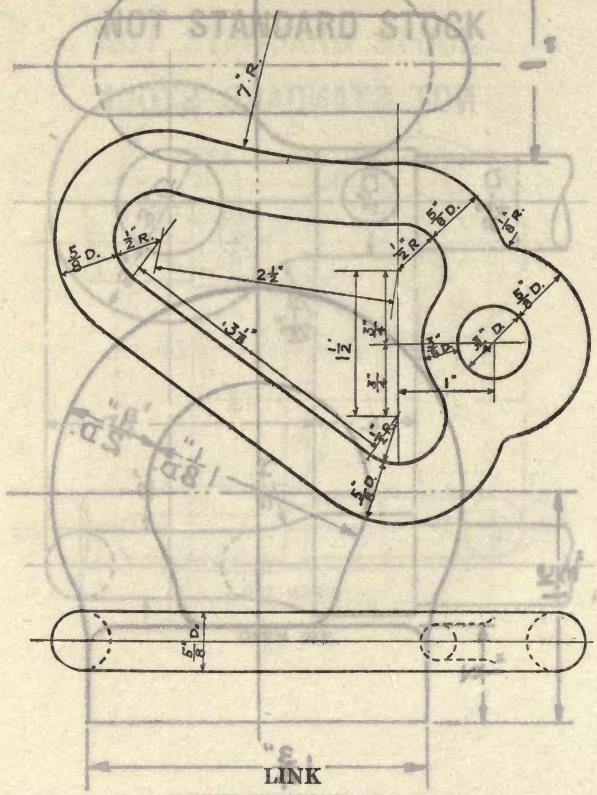

LINK

For 14-inch shell stowage

Weight (steel), lbs. Die number, 3048-Y

NOT STANDARD STOCK

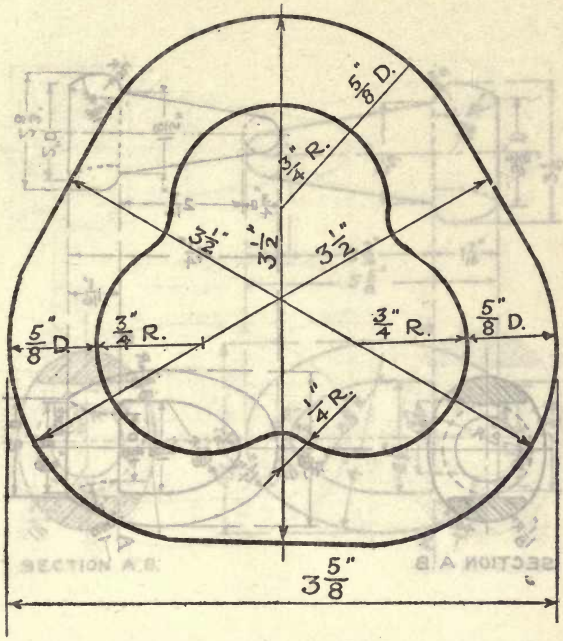

LINK

For 14-inch shell stowage

Weight (steel), lbs. **Die number, 3049-YM**

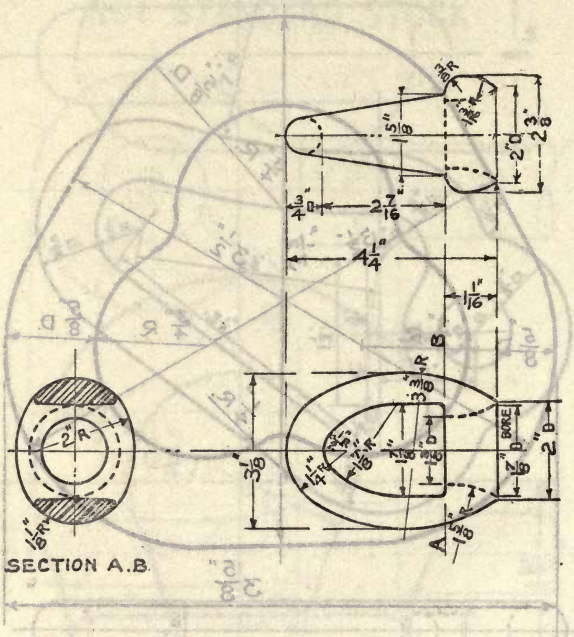

BOX, SWIVEL, 1/2″ AND 5/8″ CHAIN CABLE

Weight, lbs. Die number, 3050-B

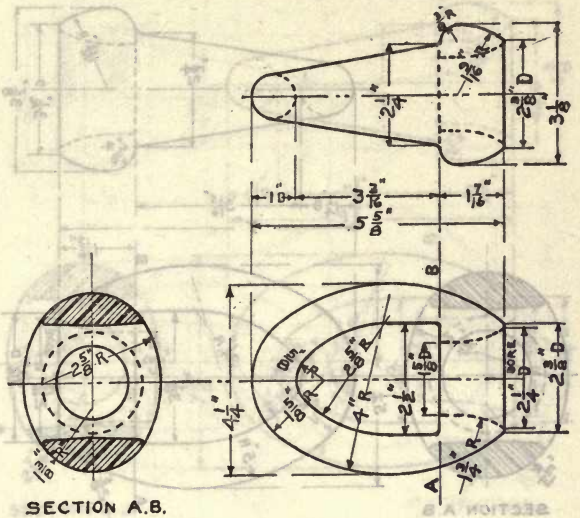

SECTION A.B.

BOX, SWIVEL, 3/4″ AND 7/8″ CHAIN CABLE

Weight, lbs. **Die number, 3051-B**

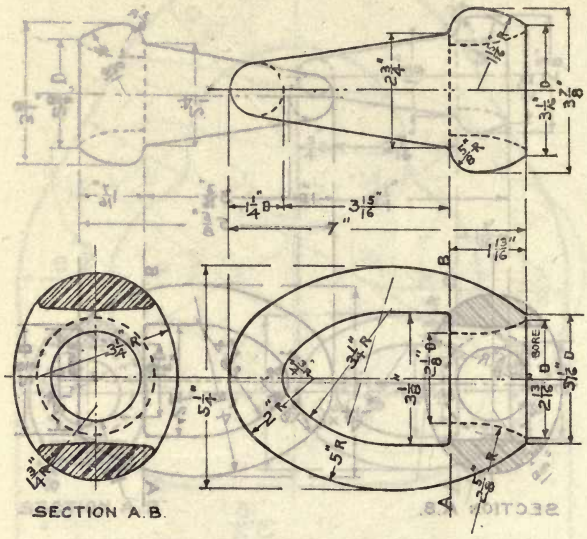

BOX, SWIVEL, 1″ AND 1 1/8″ CHAIN CABLE

Weight, lbs. **Die number, 3052-B**

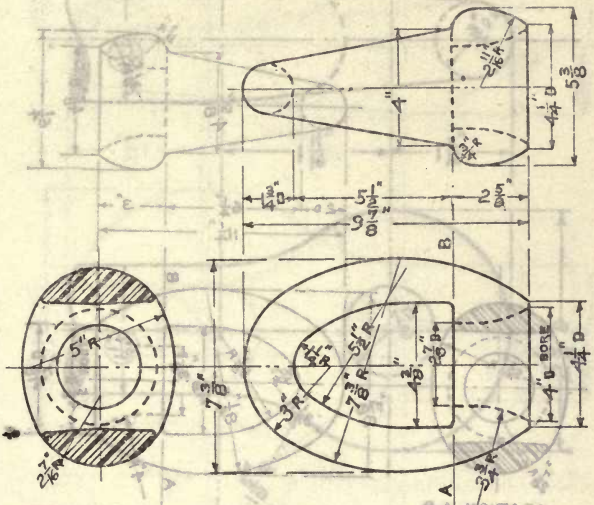

SECTION A.B

BOX, SWIVEL, 1 1/4″ AND 1 3/8″ CHAIN CABLE

Weight, lbs. **Die number, 3053-B**

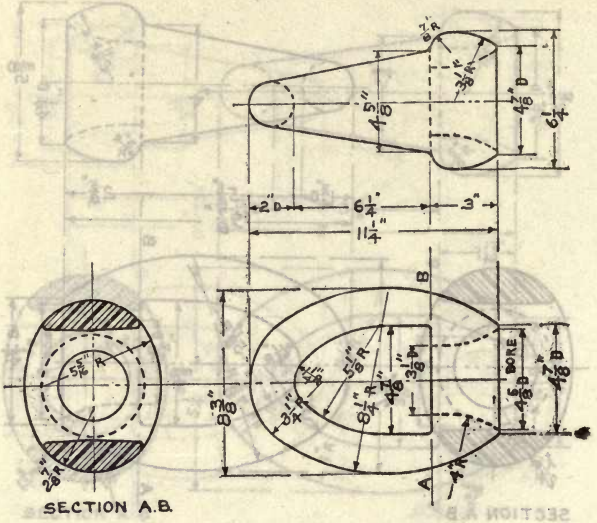

BOX, SWIVEL, 1 1/2″ AND 1 5/8″ CHAIN CABLE

Weight, lbs. Die number, 3054-B

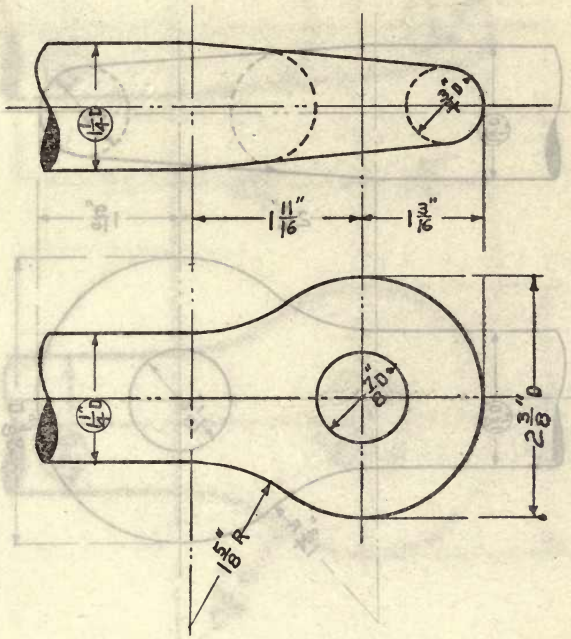

BOLT, EYE, 1 1/4"

Eye, 7/8" Length, open die

Weight, lbs. Die number, 3055-B

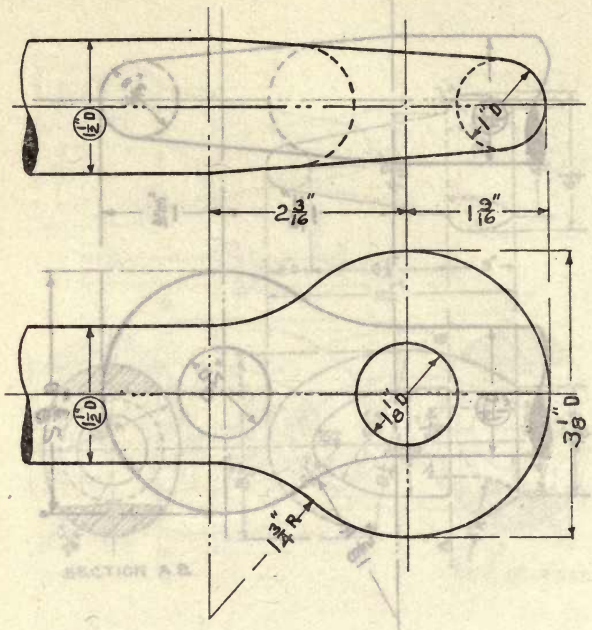

BOLT, EYE, 1 1/2″

Eye, 1 1/8″ Length, open die

Weight, lbs. Die number, 3056-B

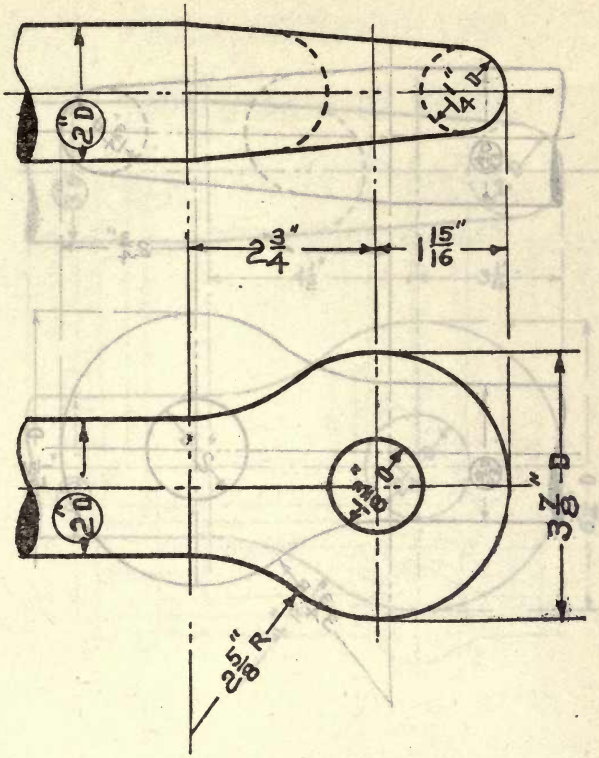

BOLT, EYE, 2″

Eye, 1 3/8″ Length, open die

Weight, lbs. Die number, 3057-B

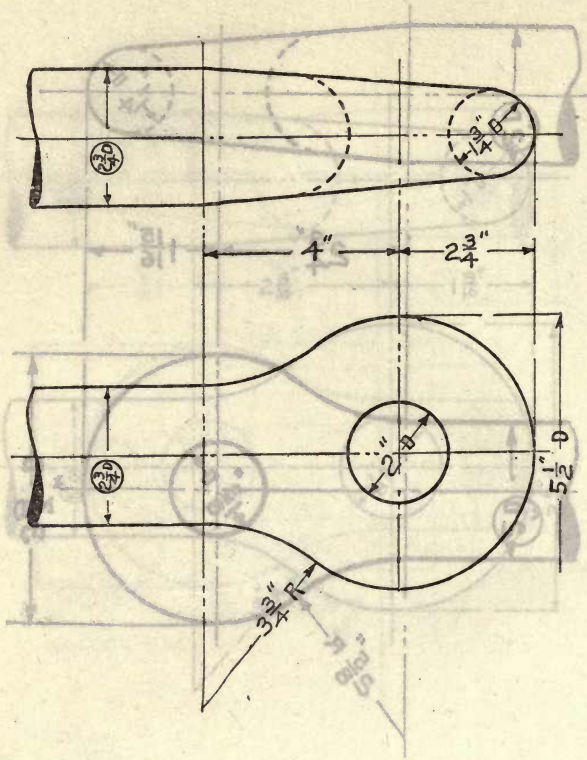

BOLT, EYE, 2 3/4″

Eye, 2″ Length, open die

Weight, lbs. Die number, 3058-B

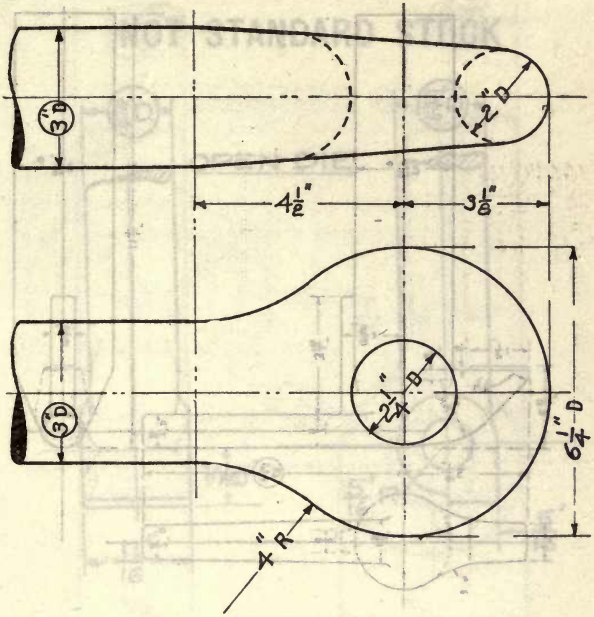

BOLT, EYE, 3″

Eye, 2 1/4″ Length, open die

Weight, lbs. Die number, 3059-B

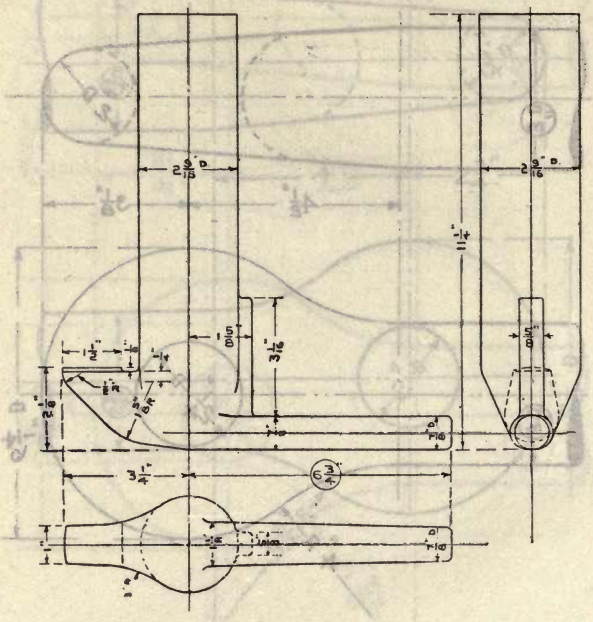

DOG, HANDLED, WITH SPINDLE, 6 3/4″

For armored hatches

Weight (steel), lbs. **Die number, 3060-YM**

NOT STANDARD STOCK

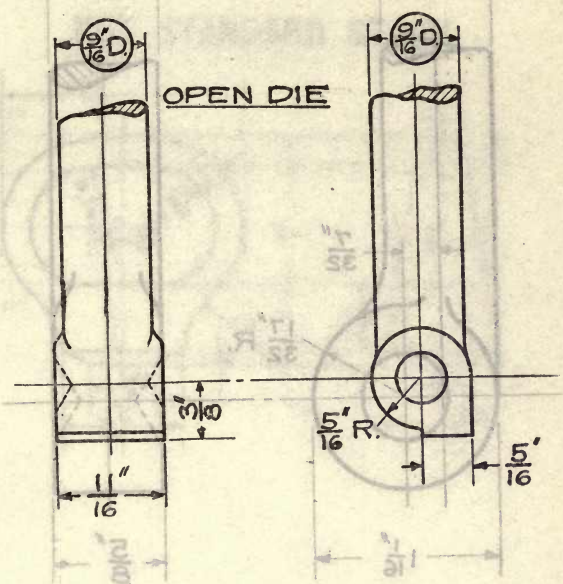

BOLT, DROP, 9/16″

Head, 11/16″ x 5/8″ Length, open die

Weight, lbs. Die number, 3061-N

NOT STANDARD STOCK

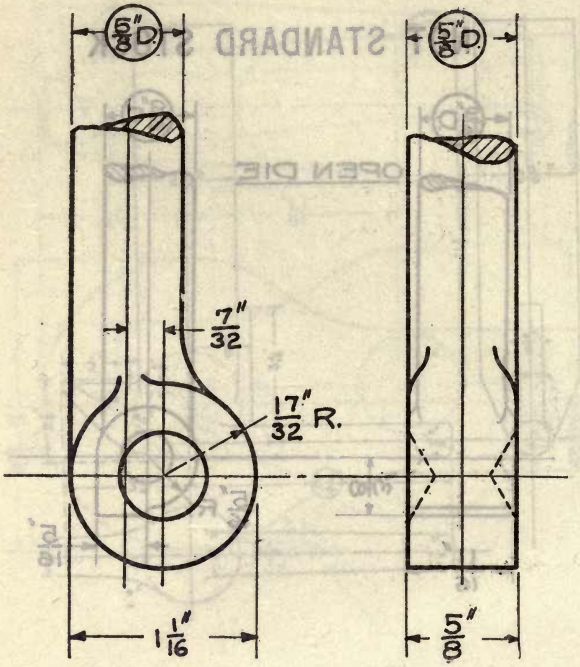

BOLT, DROP, 5/8″

Head 5/8″ x 1 1/16″ Length, open die

Weight, lbs. Die number, 3062-N

NOT STANDARD STOCK

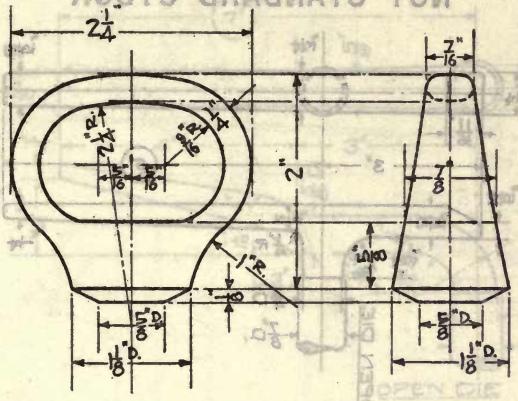

NUT, BOLT, DROP, 9/16″

Used with 9/16″ drop bolt

Weight, lbs. Die number, 3063-N

NOT STANDARD STOCK

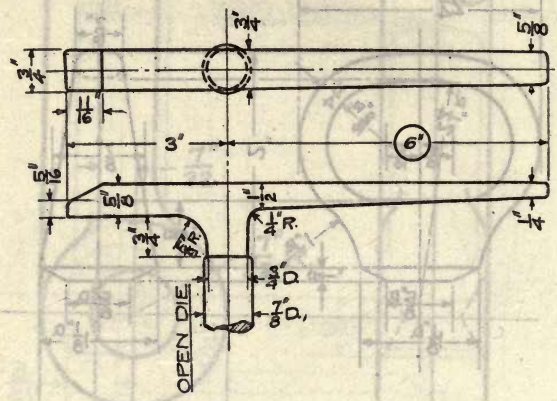

DOG, HANDLED, WITH SPINDLE, 6″

Weight, lbs. **Die number, 3064-NM**

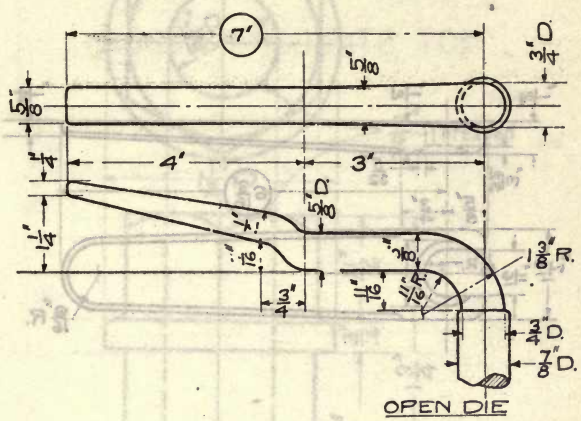

DOG, HANDLED, WITH SPINDLE, 7″

Weight, lbs. **Die number, 3065-N**

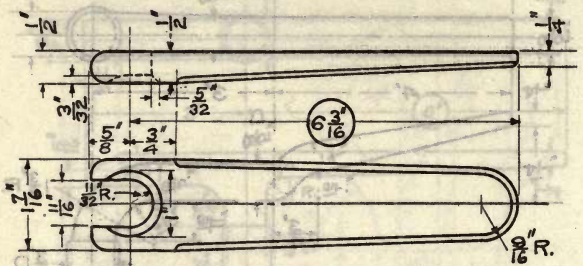

DOG, FLAT, 6 3/16″

Weight, lbs. **Die number, 3066-N**

NOT STANDARD STOCK

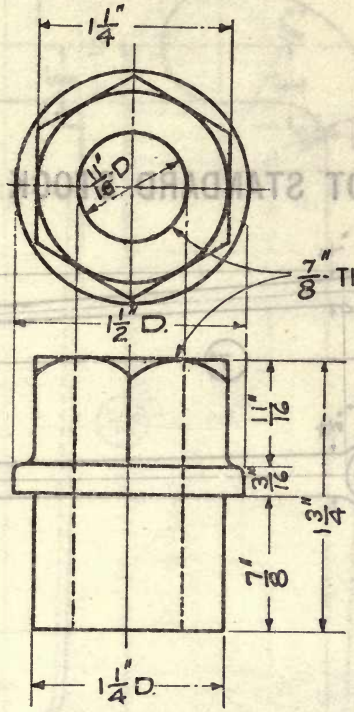

SOCKET, DOG, 7/8″

To fit 7/8″ D. spindle of dog

Weight, lbs. **Die number, 3067-NM**

NOT STANDARD STOCK

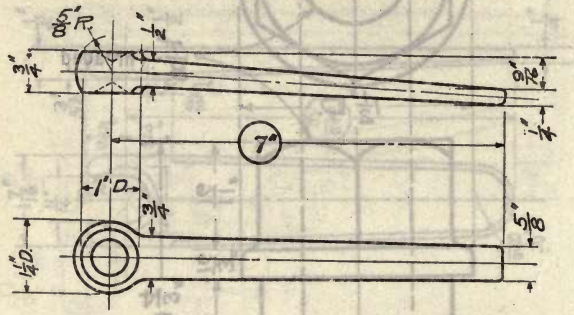

HANDLE, DOG, 7″

Weight, lbs. **Die number, 3068-NM**

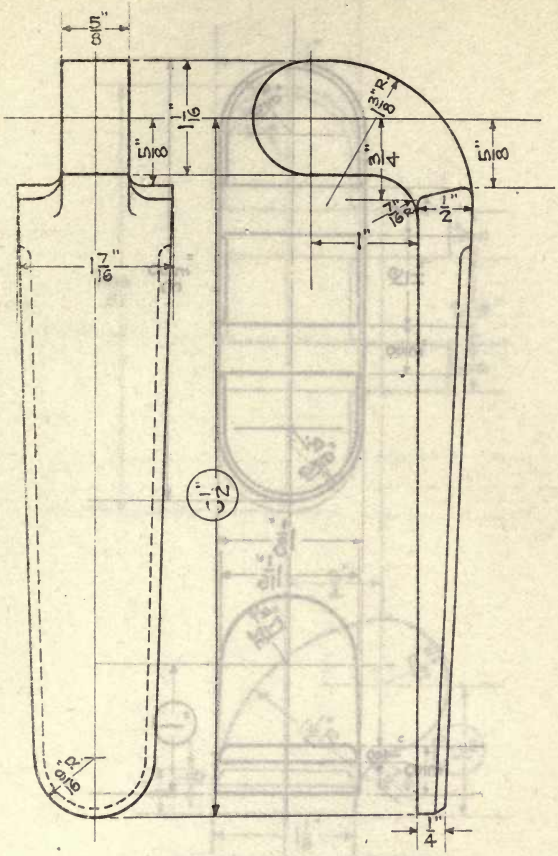

HINGE, MALE, 6 1/2″

(For female part see die number 3071)

Weight, lbs. **Die number, 3069-N**

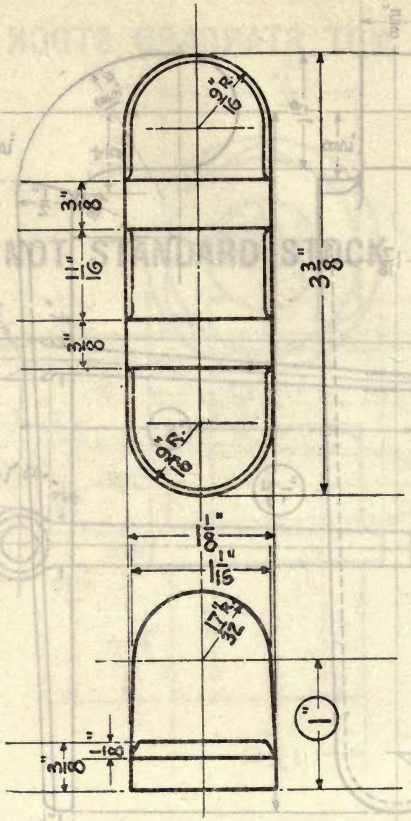

HINGE PAD, FEMALE, 1″

Used with drop bolt

Weight, lbs. **Die number, 3070-N**

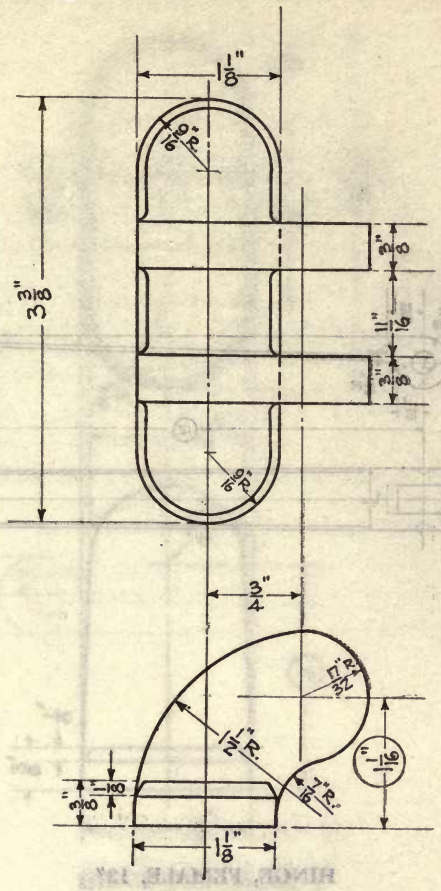

HINGE PAD, FEMALE, 1 1/16″

(For male part see die number 3069)

Weight, lbs. Die number, 3071-N

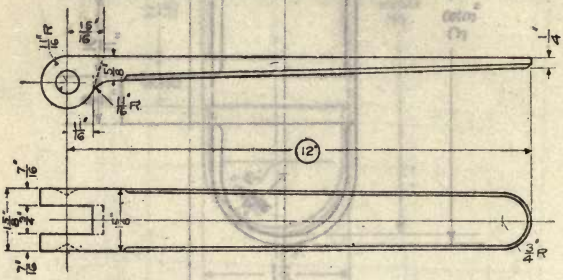

HINGE, FEMALE, 12″

(For male part see die number 3073)

Weight, **lbs.** **Die number, 3072-N**

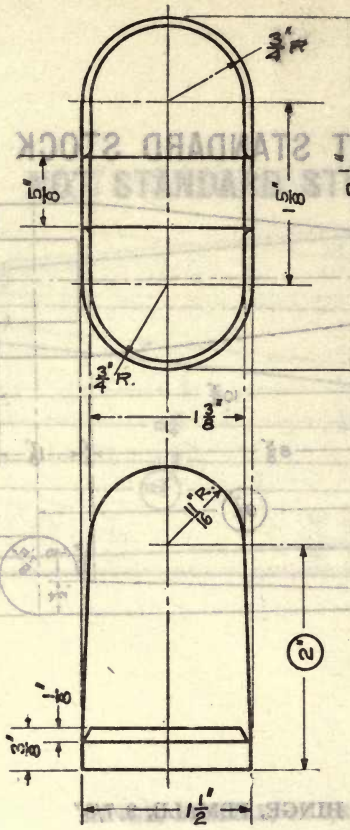

HINGE PAD, MALE, 2″

(For female part see die number 3072)

Weight, lbs. Die number, 3073-N

NOT STANDARD STOCK

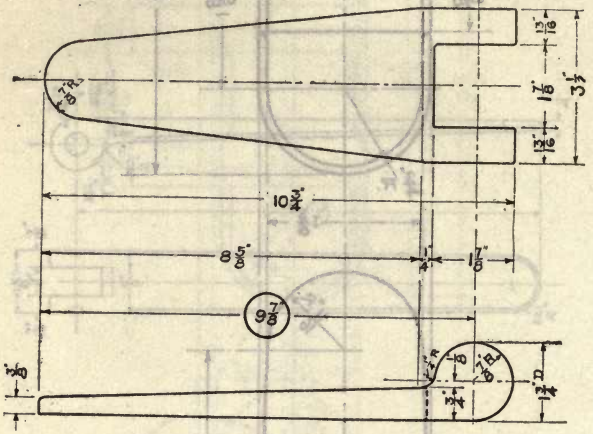

HINGE, FEMALE, 9 7/8″

Size of pad 8 7/8″ x 3 1/2″ x 3/4″

(For male part see die number 3076)

Weight, lbs. **Die number, 3074-B**

NOT STANDARD STOCK

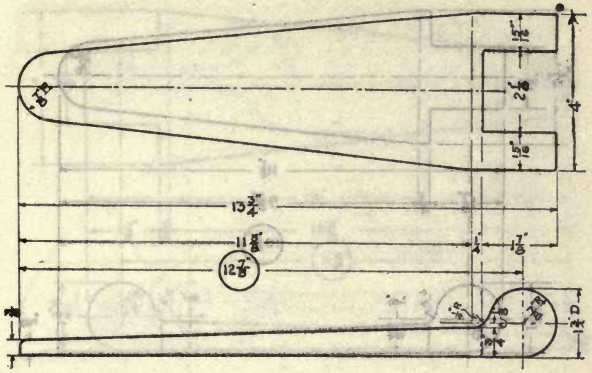

HINGE, FEMALE, 12 7/8″

Size of pad 11 7/8″ x 4″ x 3/4″

(For male part see die number 3077)

Weight, lbs. **Die number, 3075-B**

NOT STANDARD STOCK

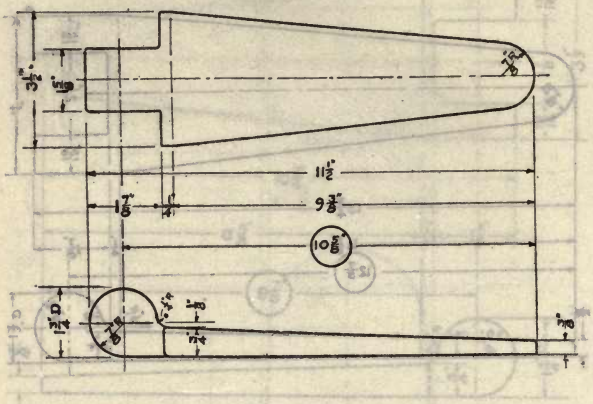

HINGE, MALE, 10 5/8″

Size of pad, 9 5/8″ x 3 1/2″ x 3/4″

(For female part see die number 3074)

Weight, lbs. Die number, 3076-B

NOT STANDARD STOCK

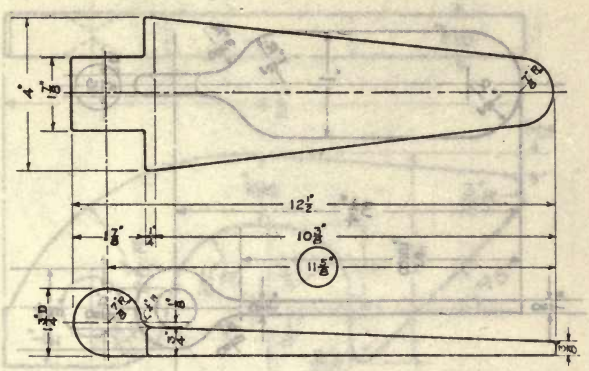

HINGE, MALE, 11 5/8″

Size of pad, 10 5/8″ x 4″ x 3/4″

(For female part see die number 3075)

Weight, lbs. **Die number, 3077-B**

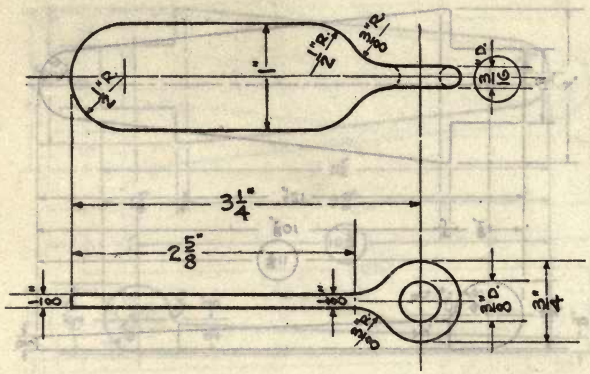

EYE PAD, 3/16″

Eye, 3/8″ Size of pad, 2 5/8″ x 1″ x 1/8″

Weight, lbs. Die number, 3078-N

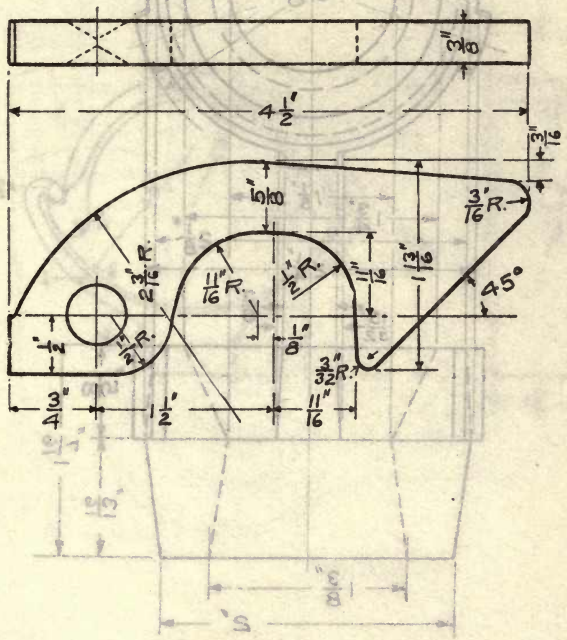

CATCH, BERTH, FOLDING

Weight, lbs. **Die number, 3079-N**

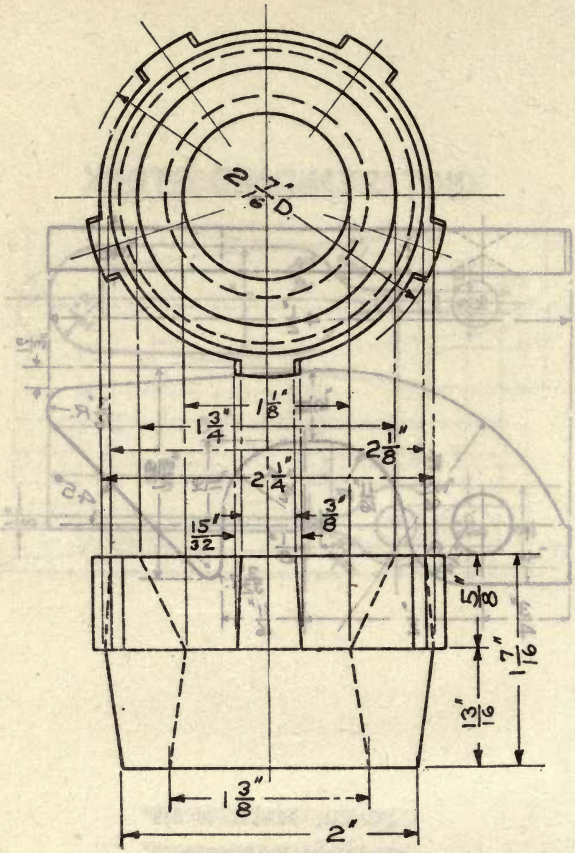

BUSHING, BOILER, LAUNCH

Weight (steel), 0.50 lb. **Die number, 3080-N**

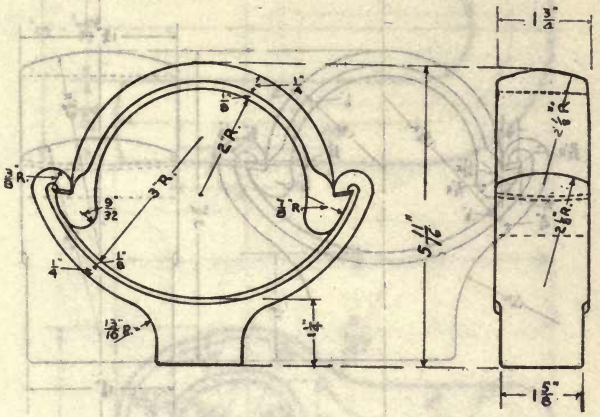

CLAMP, TUBE, 4"

Weight (steel), 4.75 lbs. **Die number, 3081-N**

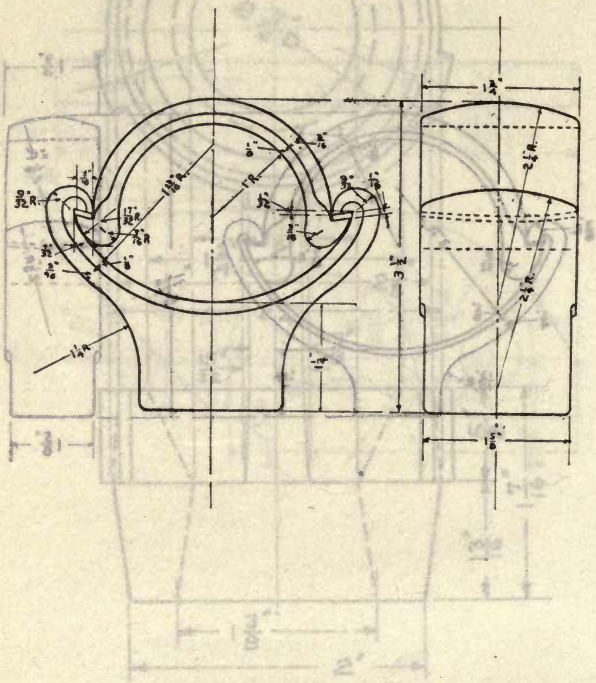

CLAMP, TUBE, 2"

Weight (steel), 2.125 lbs. **Die number, 3082-N**

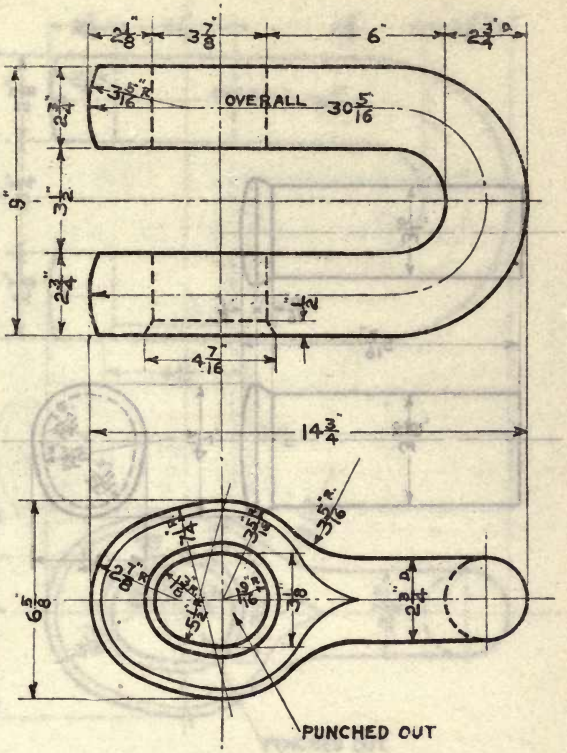

SHACKLE, CONNECTING, 2 1/2″ CHAIN CABLE

Weight (steel), lbs. **Die number, 3083-B**

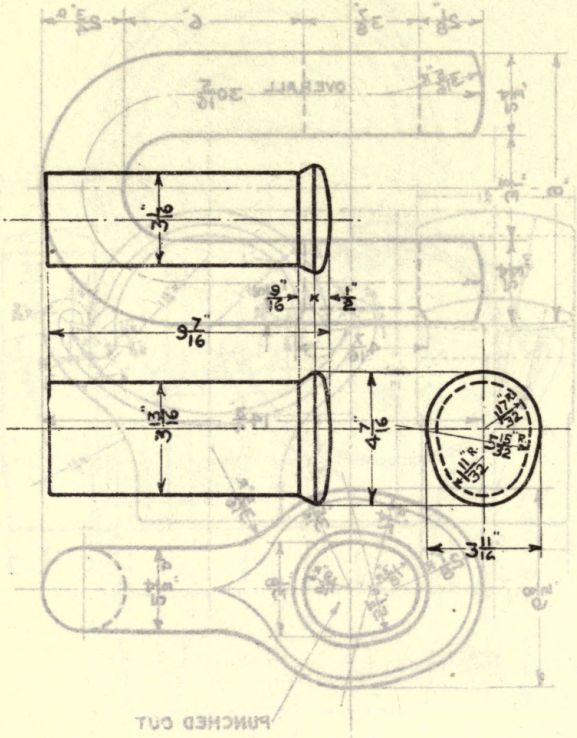

PIN, SHACKLE, CONNECTING, 2 1/2″ CHAIN CABLE

Weight (steel), lbs. **Die number, 3084-B**

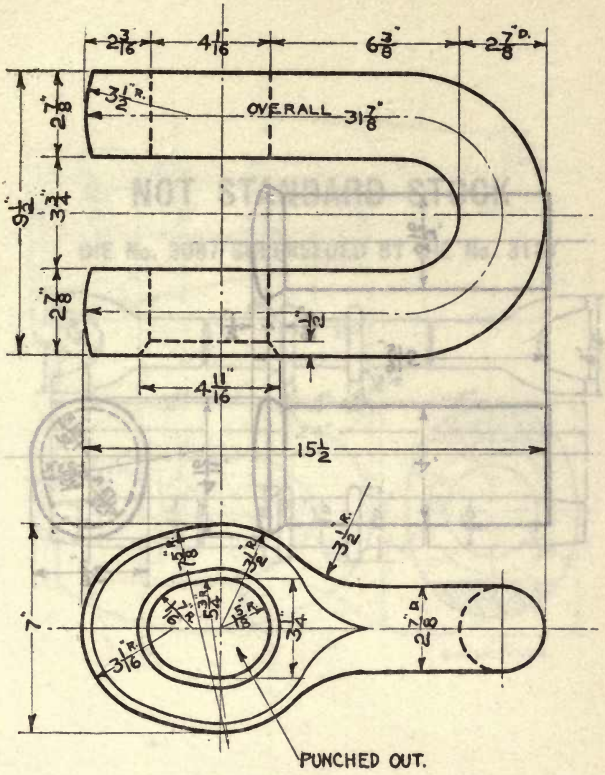

SHACKLE, CONNECTING, 2 5/8″ CHAIN CABLE

Weight (steel), lbs. **Die number, 3085-B**

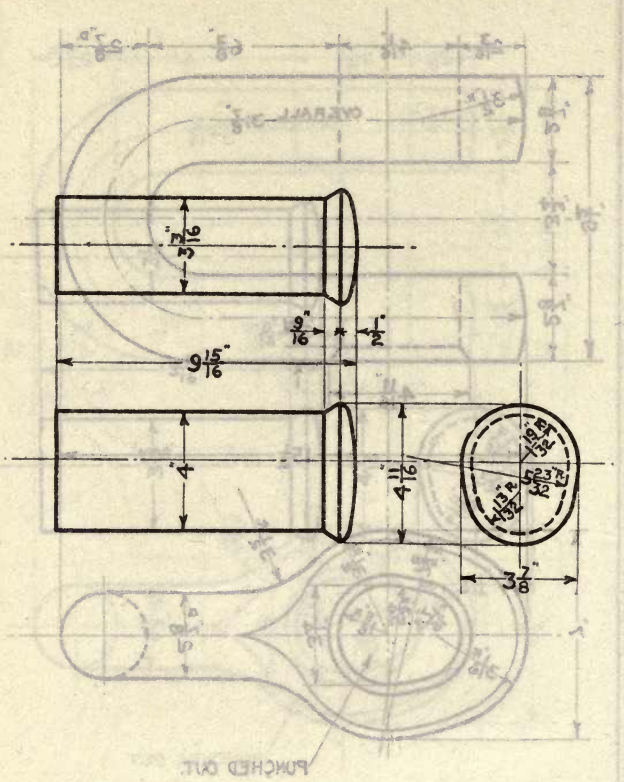

PIN, SHACKLE, CONNECTING, 2 5/8″ CHAIN CABLE

Weight (steel), lbs. **Die number, 3086-B**

NOT STANDARD STOCK

DIE No. 3087 SUPERSEDED BY DIE No. 3187

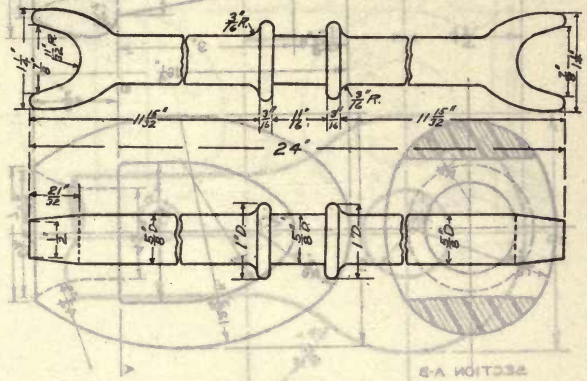

FITTINGS, TABLE, MESS

Brace, leg

Weight (steel), lbs. Die number, 3087-N

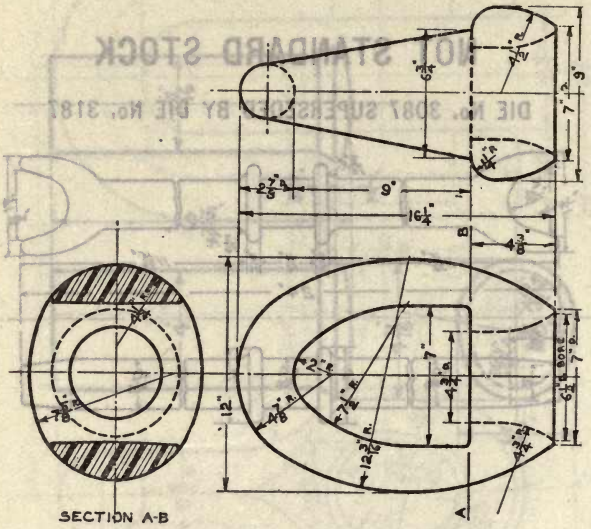

BOX, SWIVEL, 2 1/4″ AND 2 1/2″ CHAIN CABLE

Weight, lbs. Die number, 3088-B

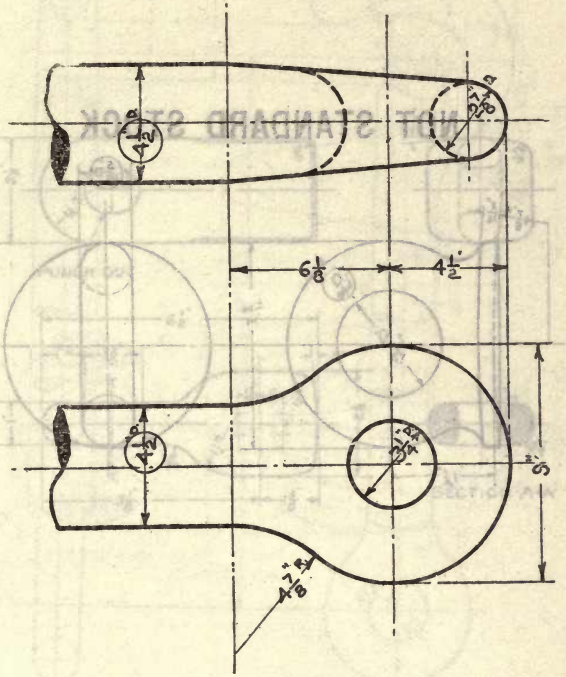

BOLT, EYE, 4 1/2″

Eye, 3 1/4″ Length, open die

Weight, lbs. Die number, 3089-B

NOT STANDARD STOCK

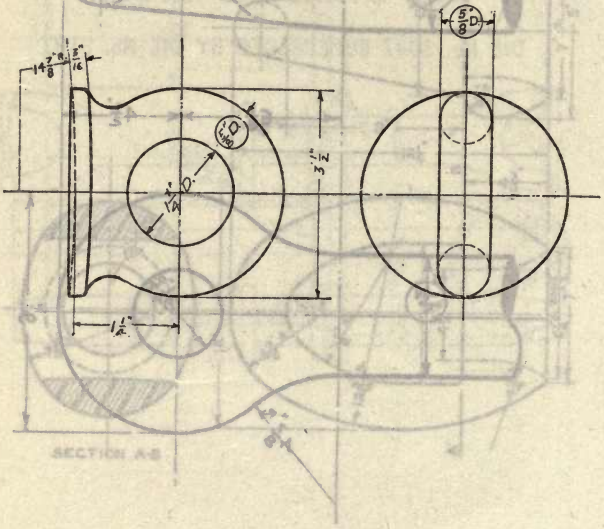

EYE, PAD, 5/8″

Pad, 3 1/4″ D. Eye, 1 1/4″ D.

For use on marker buoys

Weight (steel), 0.75 lb. **Die number, 3090-N**

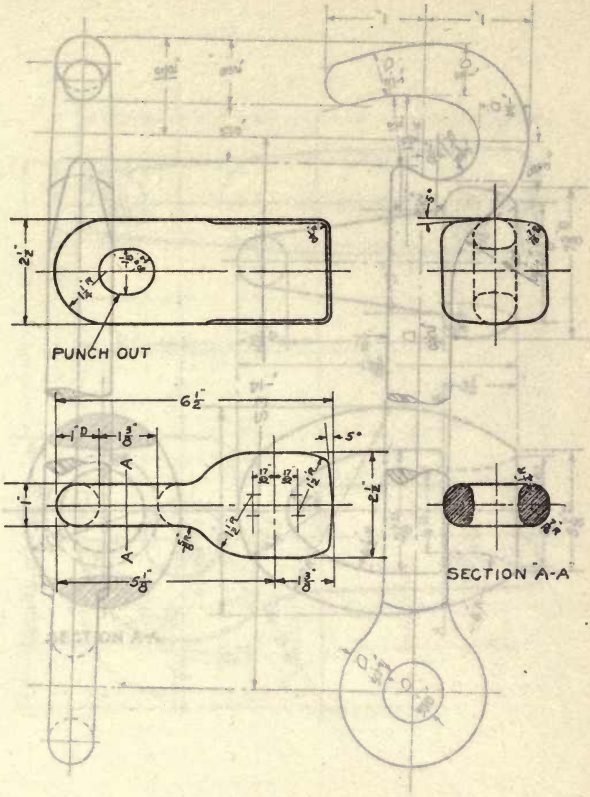

COUPLING, SHEARING, BLANK

Mine sweep gear

Weight (steel), lbs. **Die number, 3091-B**

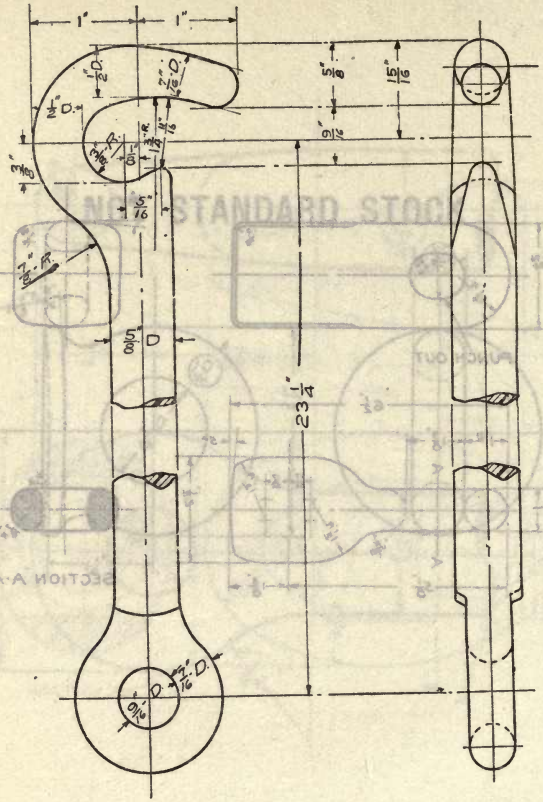

FITTINGS, BENCH, MESS

Rod, brace

Weight (steel), 1.50 lbs. **Die number, 3092-N**

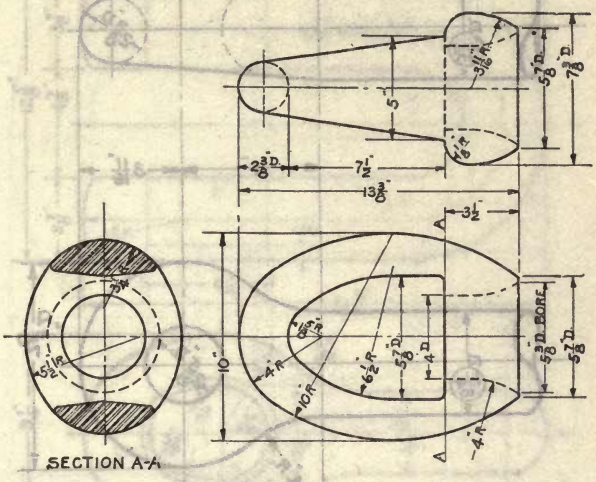

BOX, SWIVEL, 1 3/4″ AND 2″ CHAIN CABLE

Weight (steel), lbs. **Die number, 3093-B**

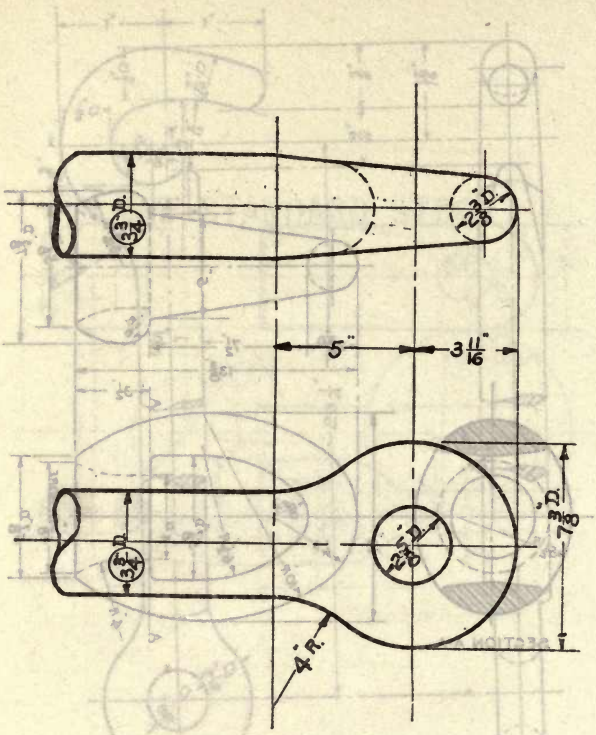

BOLT, EYE, 3 3/4″

Eye, 2 5/8″ Length, open die

Weight (steel), lbs. Die number, 3094-B

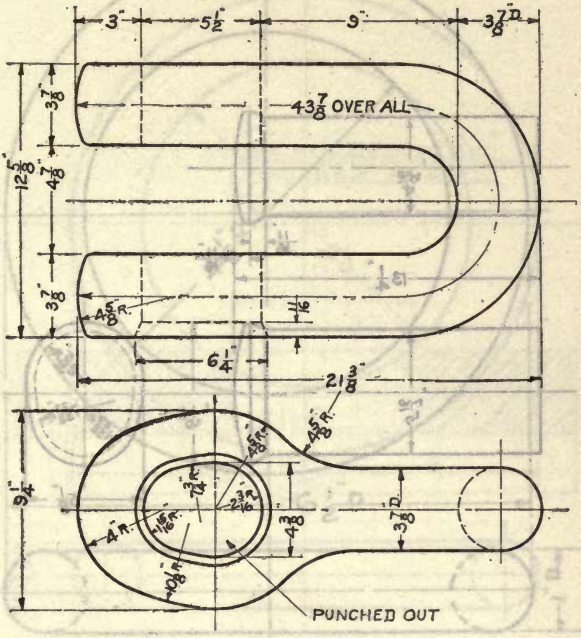

SHACKLE, CONNECTING, 3 1/2" CHAIN CABLE

Weight (steel), lbs. **Die number, 3095-B**

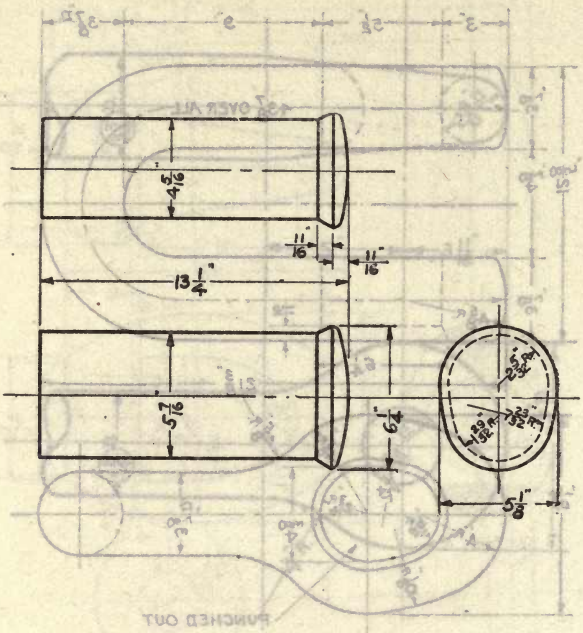

PIN, SHACKLE, CONNECTING, 3 1/2″ CHAIN CABLE

Weight (steel), lbs. **Die number, 3096-B**

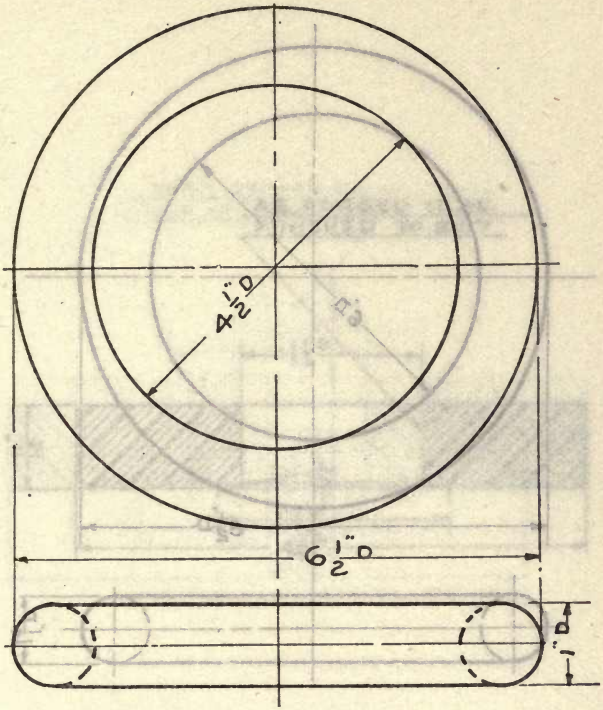

RING, 4 1/2" X 1"

For 6 ft. and 9 ft. mine sweep kites

Weight (steel), 1 lbs. Die number, 3097-B

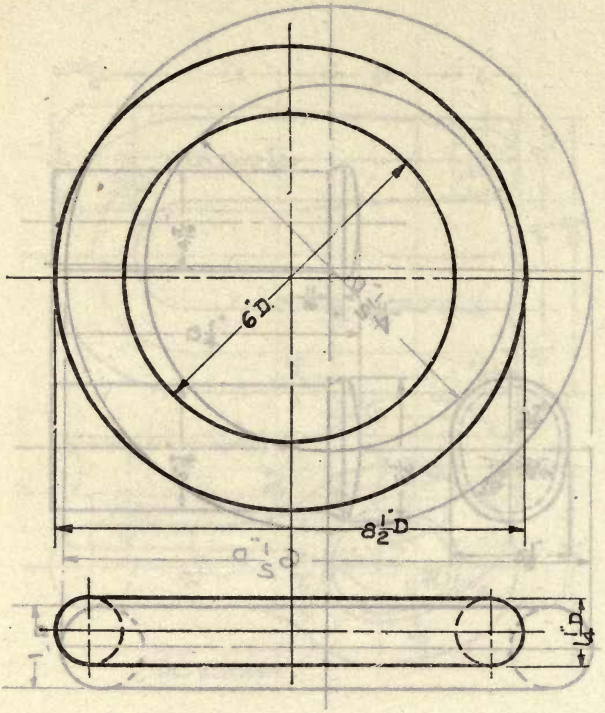

RING, 6″ X 1 1/4″

For 12 ft. mine sweep kite

Weight (steel), lbs. **Die number, 3098-B**

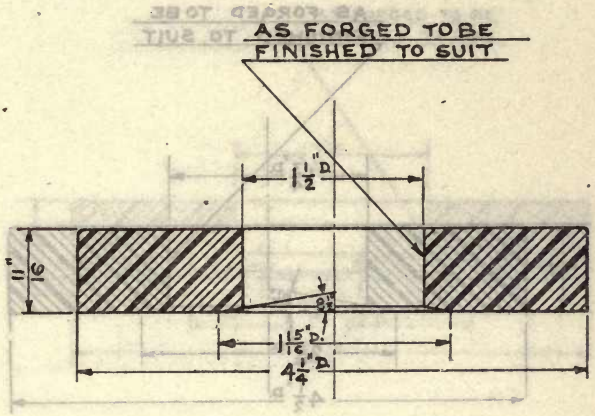

FLANGE, HOLLOW-HEEL, PLAIN 1″

Weight (steel), lbs. **Die number, 3099-Y**

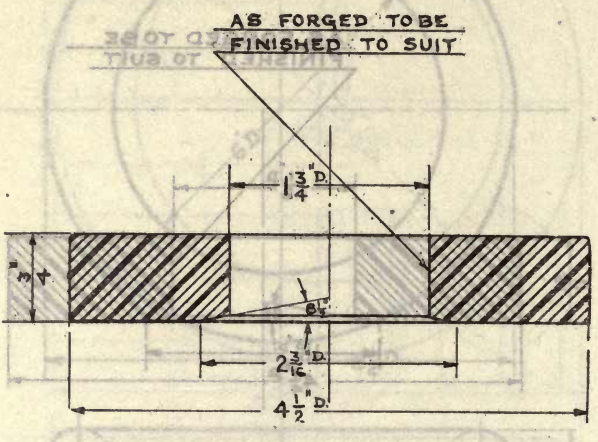

FLANGE, HOLLOW-HEEL, PLAIN 1 1/4″

Weight (steel), lbs. **Die number, 3100-Y**

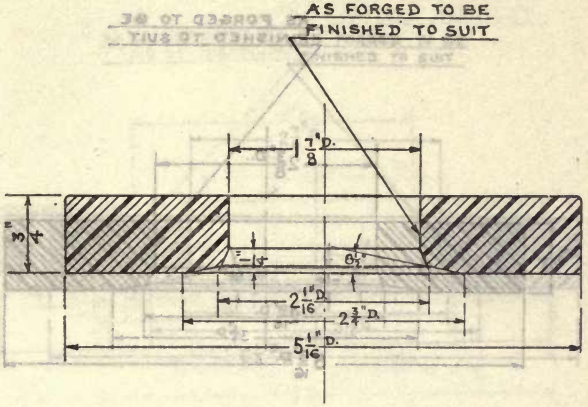

FLANGE, HOLLOW-HEEL, PLAIN 1 1/2″

Weight (steel), **lbs.** **Die number 3101-YM**

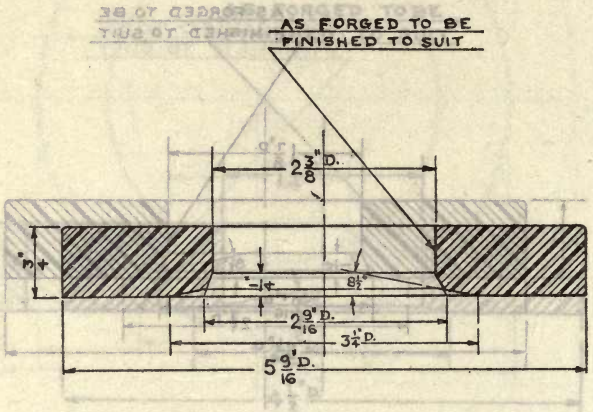

FLANGE, HOLLOW-HEEL, PLAIN 2″

Weight (steel), lbs. Die number, 3102-YM

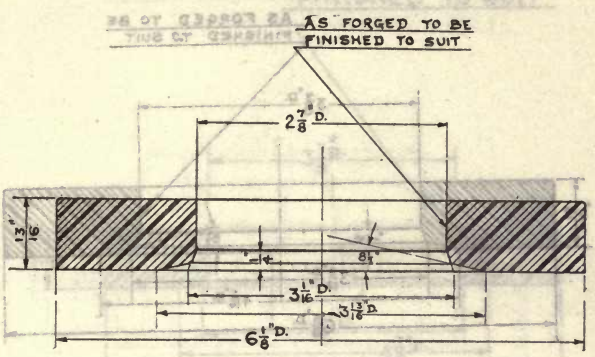

FLANGE, HOLLOW-HEEL, PLAIN 2 1/2″

Weight (steel), **lbs.** **Die number, 3103-YM**

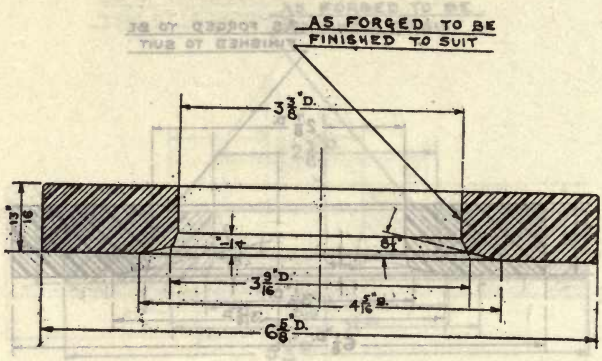

FLANGE, HOLLOW-HEEL, PLAIN 3″

Weight (steel), lbs. **Die number, 3104-YM**

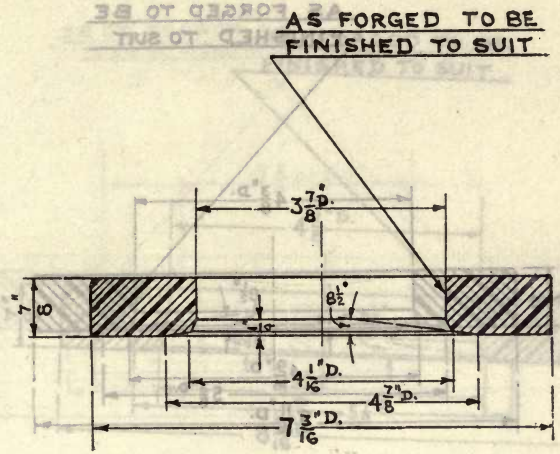

FLANGE, HOLLOW-HEEL, PLAIN 3 1/2″

Weight (steel), lbs. **Die number, 3105-YM**

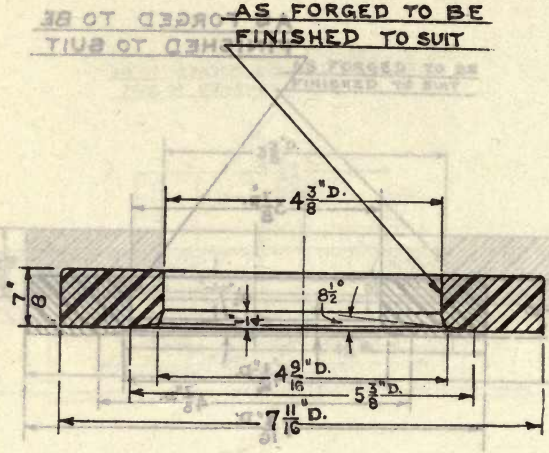

FLANGE, HOLLOW-HEEL, PLAIN 4″

Weight (steel), lbs. **Die number, 3106-YM**

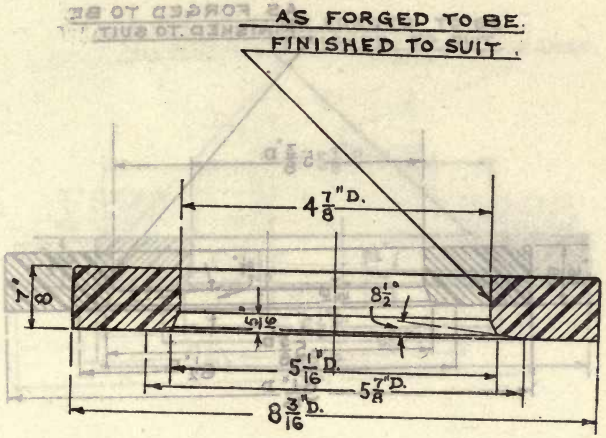

FLANGE, HOLLOW-HEEL, PLAIN 4 1/2″

Weight (steel), lbs. **Die number, 3107-YM**

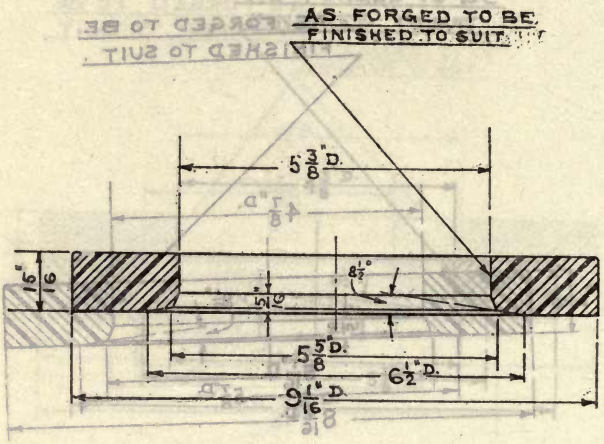

FLANGE, HOLLOW-HEEL, PLAIN 5″

Weight (steel), lbs. Die number, 3108-YM

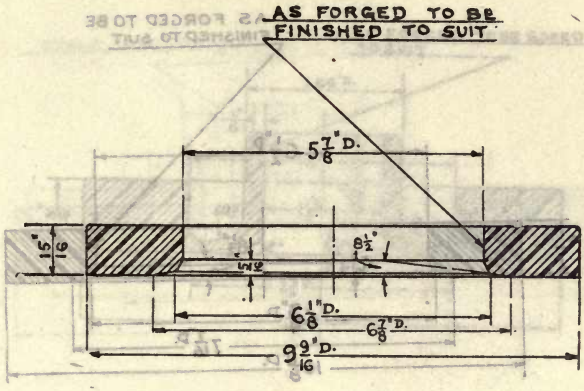

FLANGE, HOLLOW-HEEL, PLAIN 5 1/2″

Weight (steel), lbs. Die number, 3109-Y

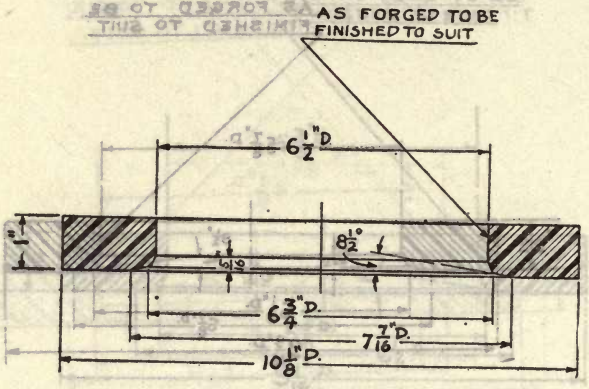

FLANGE, HOLLOW-HEEL, PLAIN 6″

Weight (steel), lbs. Die number, 3110-YM

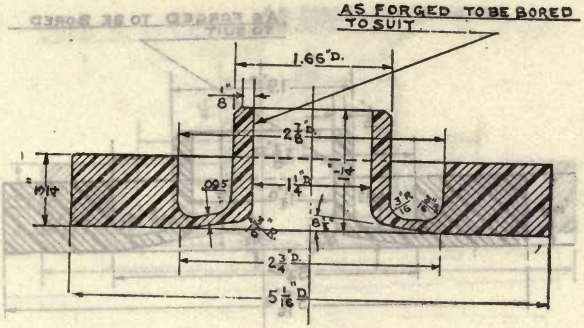

FLANGE, FLEXIBLE, 1 1/4"

Weight (steel), lbs. Die number, 3111-Y

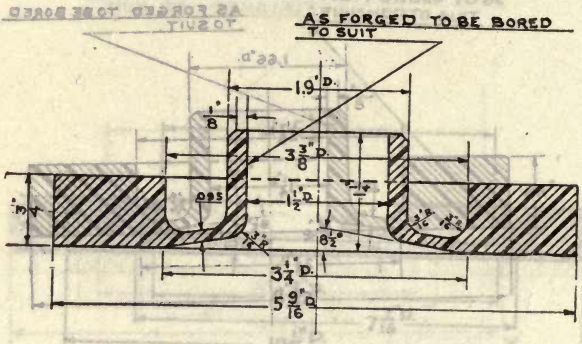

FLANGE, FLEXIBLE, 1 1/2″

Weight (steel), lbs. Die number, 3112-Y

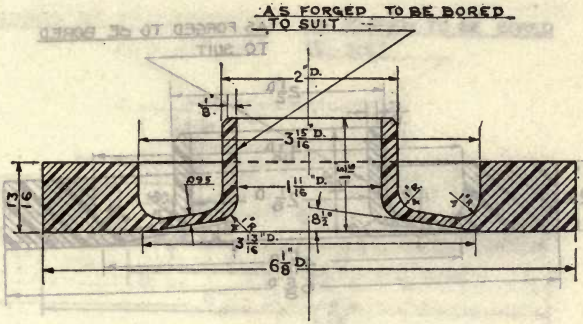

FLANGE, FLEXIBLE, 1 1/2″

Weight (steel), lbs. **Die number, 3113-Y**

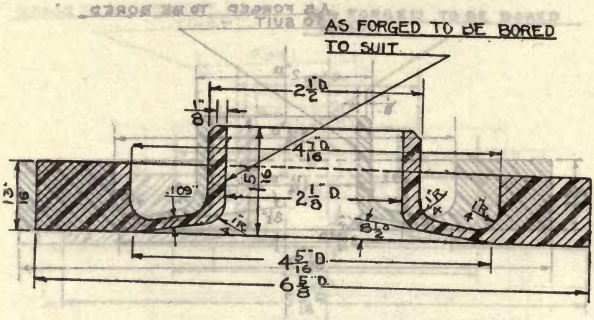

FLANGE, FLEXIBLE, 2″

Weight (steel), lbs. **Die number, 3114-YM**

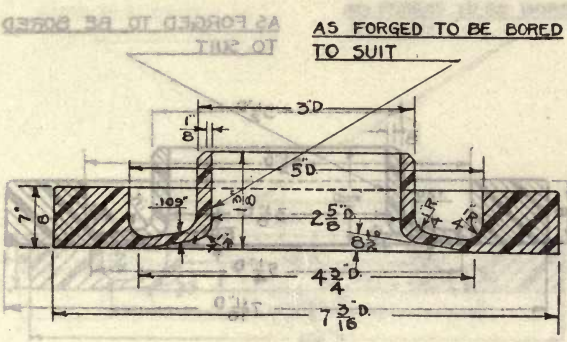

FLANGE, FLEXIBLE 2 1/2″

Weight (steel), **lbs.** **Die number, 3115-YM**

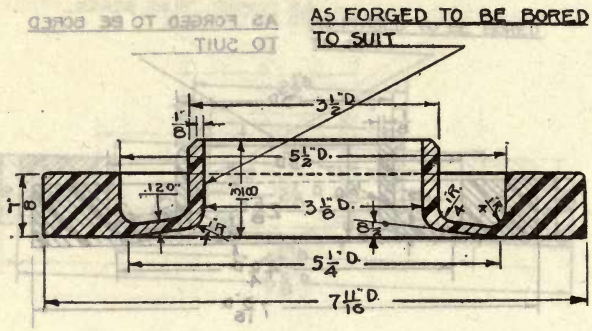

FLANGE, FLEXIBLE, 3″

Weight (steel), lbs. **Die number, 3116-YM**

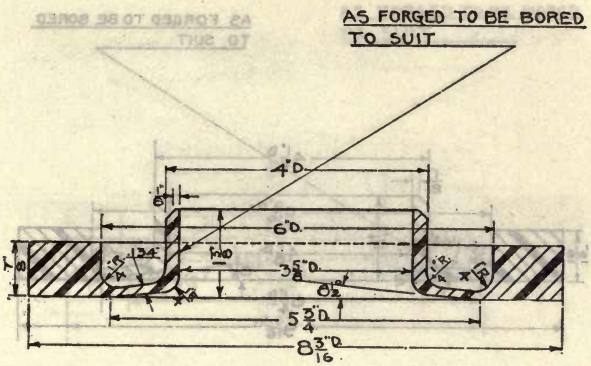

FLANGE, FLEXIBLE, 3 1/2″

Weight (steel), **lbs.** **Die number, 3117-YM**

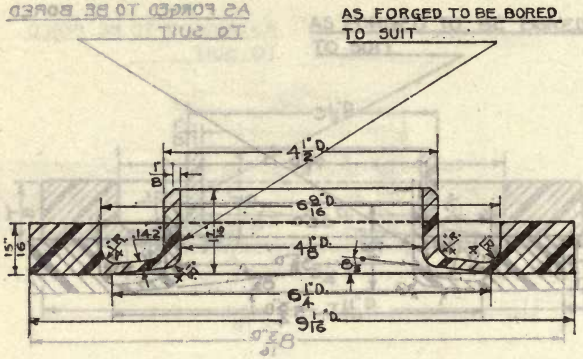

FLANGE, FLEXIBLE, 4″

Weight (steel), lbs. **Die number, 3118-YM**

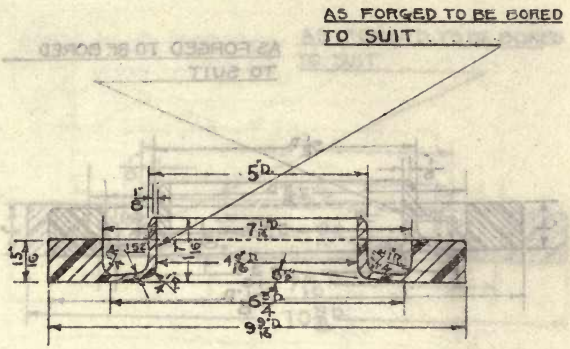

FLANGE, FLEXIBLE, 4 1/2″

Weight (steel), lbs. **Die number, 3119-YM**

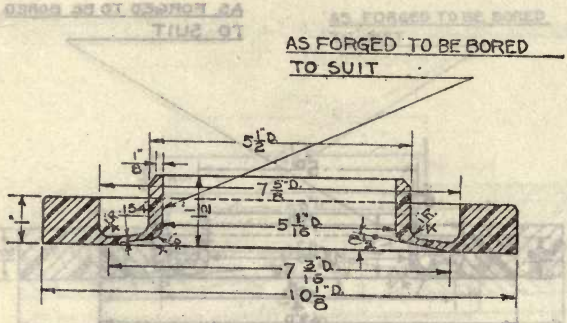

FLANGE, FLEXIBLE, 5"

Weight (steel), lbs. Die number, 3120-YM

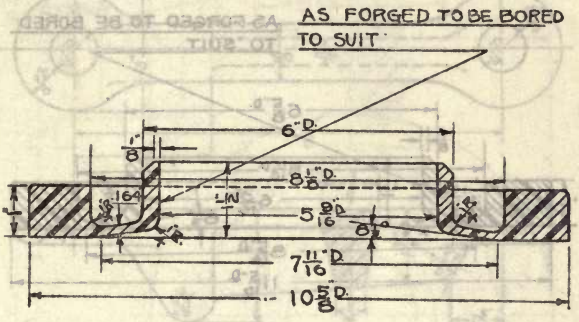

FLANGE, FLEXIBLE, 5 1/2″

Weight (steel), lbs. Die number, 3121-YM

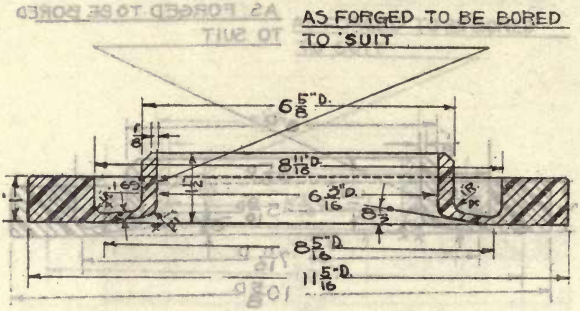

FLANGE, FLEXIBLE, 6″

Weight (steel), lbs. Die number, 3122-YM

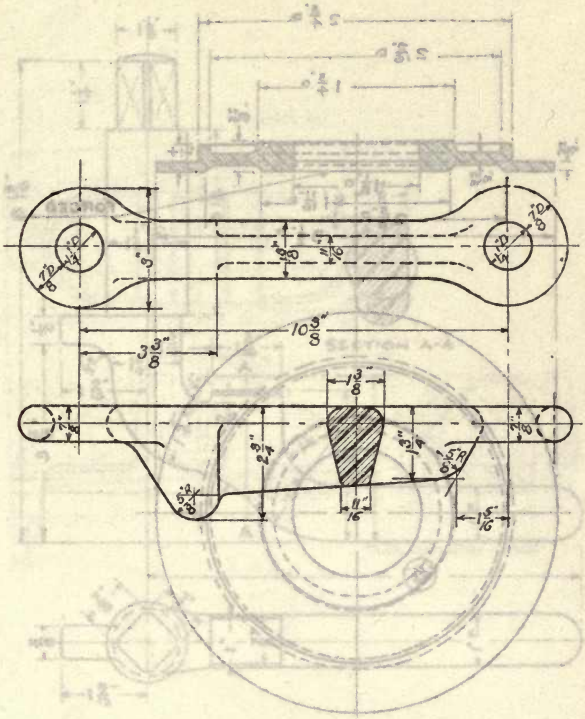

STRONGBACK, HOUSING CHAIN STOPPER

For 1 1/4" and 1 3/8" chain cable

Weight (steel), lbs. **Die number, 3123-B**

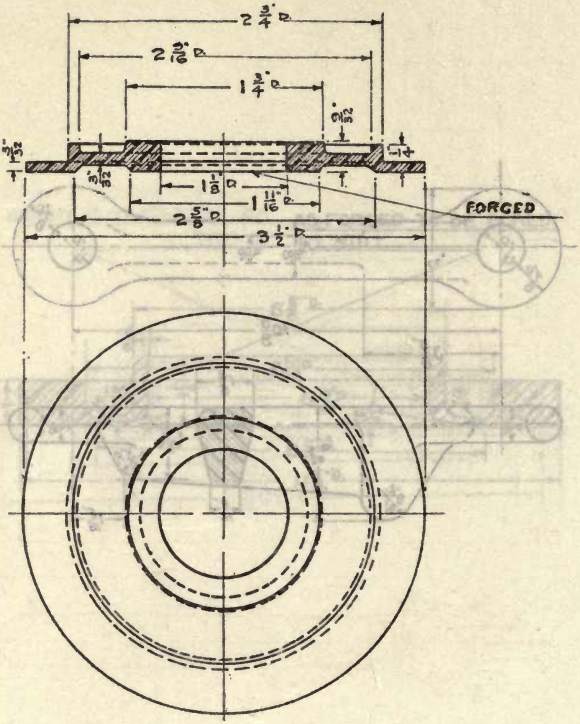

SHEAVE, TELEGRAPH, AUTOMATIC

Weight (steel), lbs. **Die number, 3124-M**

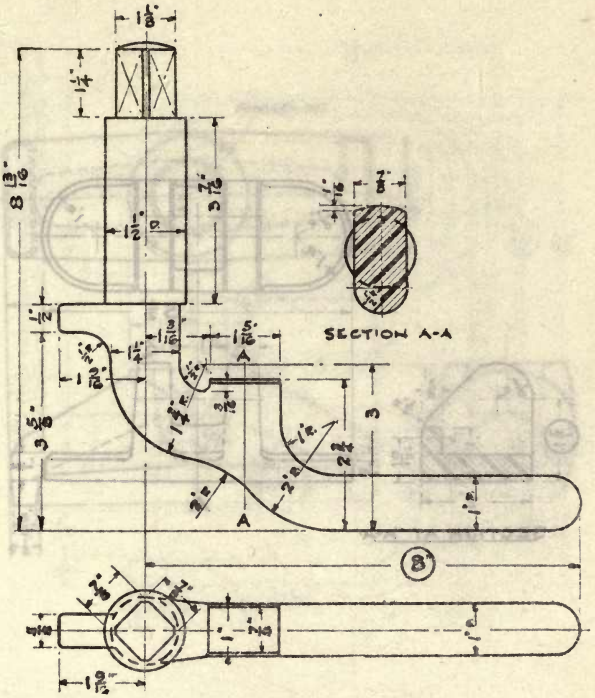

DOG, HANDLED, WITH SPINDLE, 8″

Weight (steel), lbs. **Die number, 3125-M**

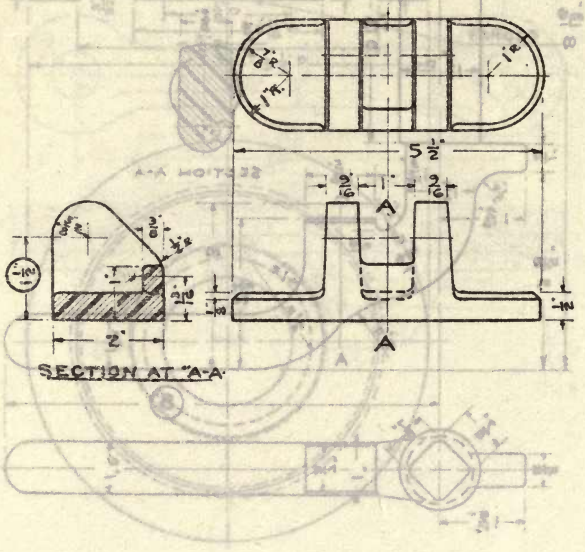

HINGE PAD, FEMALE, 1 1/2″

Weight (steel), **lbs.** **Die number, 3126-M**

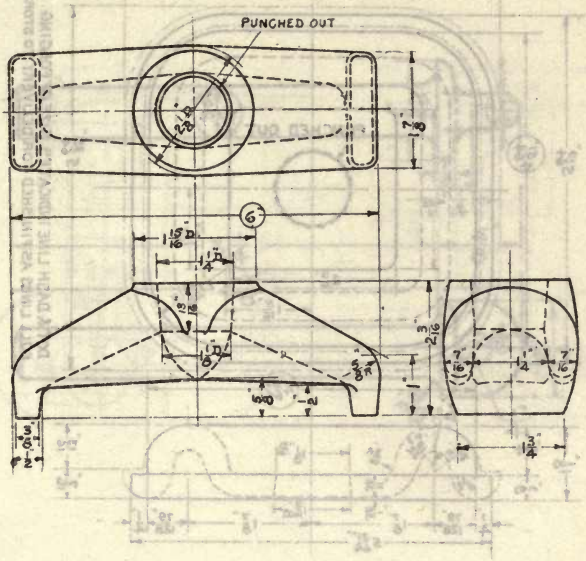

BRIDGE, CLAMPING, 6″

For rectangular handhole cover, for B. & W. boilers

Weight (steel), lbs. **Die number, 3127-BN**

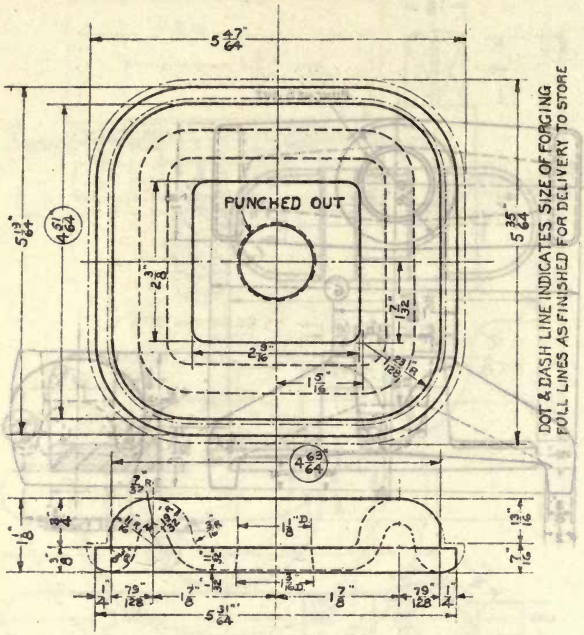

COVER, HANDHOLE, RECTANGULAR, 4 63/64″ X 4 51/64″

For B. & W. boiler

Weight (steel), lbs. Die number, 3128-BN

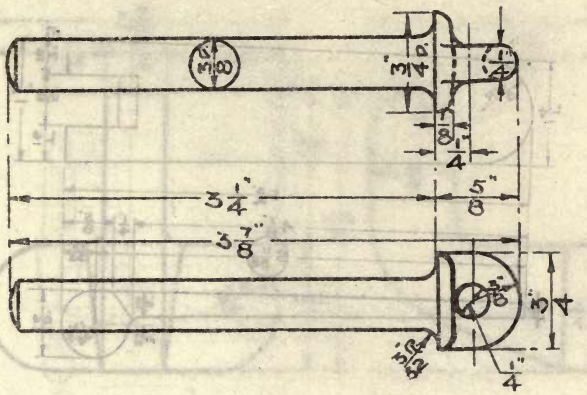

BOLT, EYE, COLLAR, 3/8"

Eye, 1/4" **Length, 3 1/4"**

Weight, lbs. **Die number, 3129-Y**

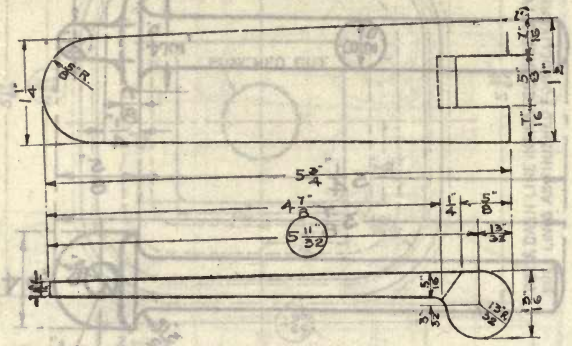

HINGE, FEMALE, 5 11/32″

Size of pad, 4 7/8″ x 1 1/2″ x 5/16″

Weight, lbs. Die number, 3130-Y

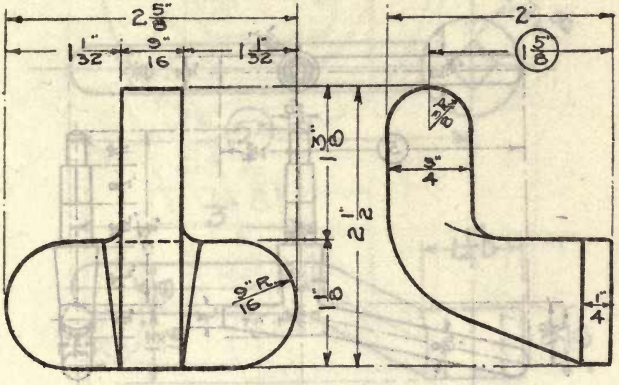

HINGE PAD, MALE, 1 5/8″

Size of pad, 2 5/8″ x 1 1/8″ x 1/4″

Weight, lbs. **Die number, 3131-Y**

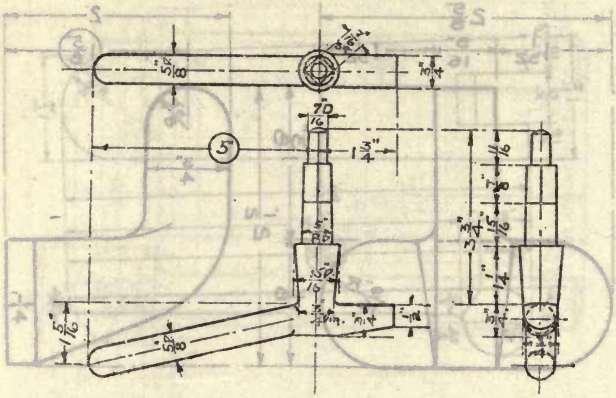

DOG, HANDLED, WITH SPINDLE, 5″

Weight, lbs. **Die number, 3132-Y**

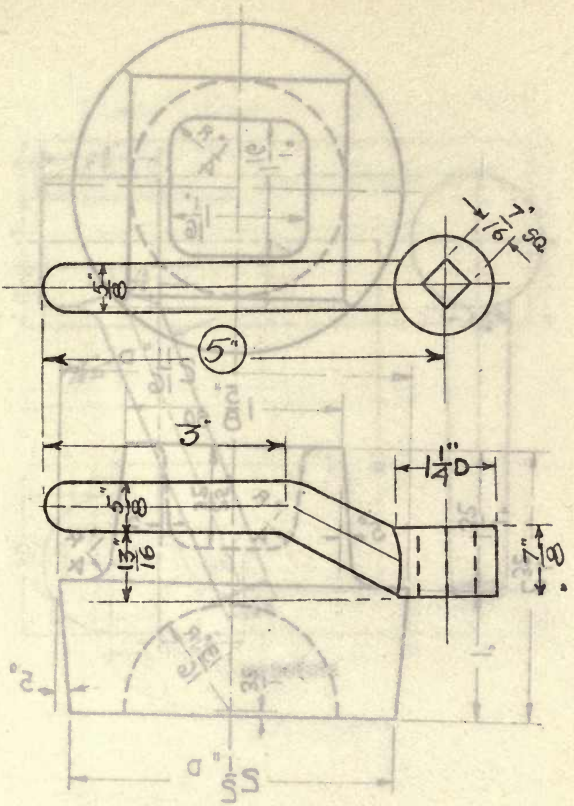

HANDLE, DOG, 5″

Weight, lbs. Die number, 3133-Y

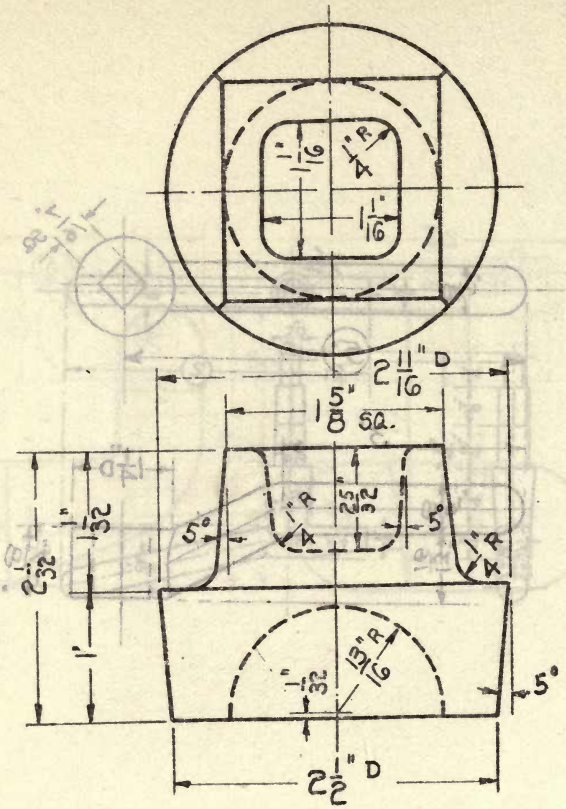

PLUG, PIPE, 2″

For boiler header

Weight (steel), 1.8 lbs. **Die number, 3134-B**

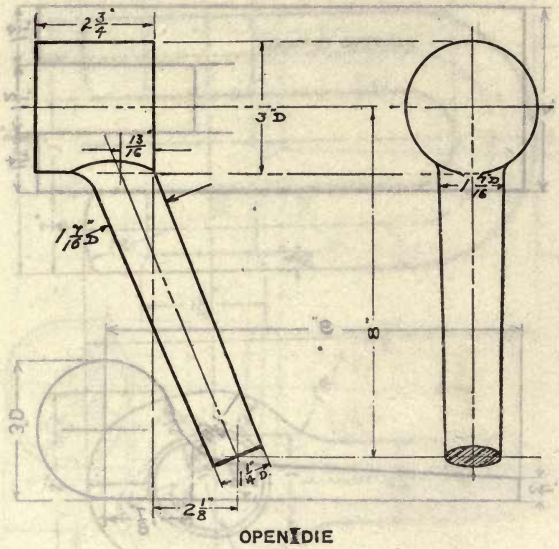

OPEN DIE

CRANK, HANDLE

Wire hawser reel

Wei (steel), lbs. Die number, 3135-B

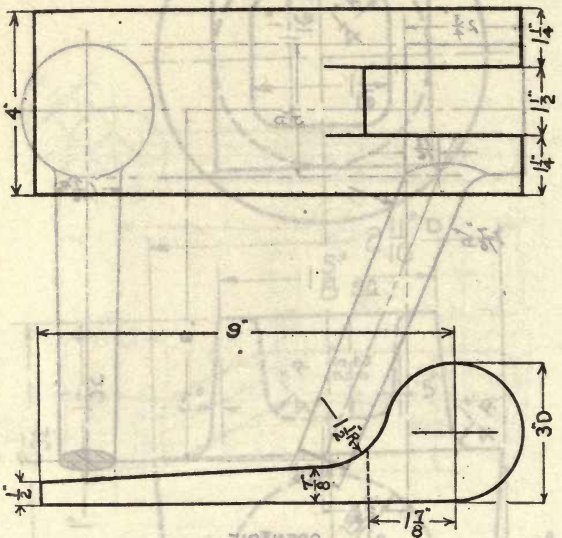

BRAKE BAND END

Wire hawser reel, mine sweeping gear

Weight (steel), lbs. **Die number, 3136-B**

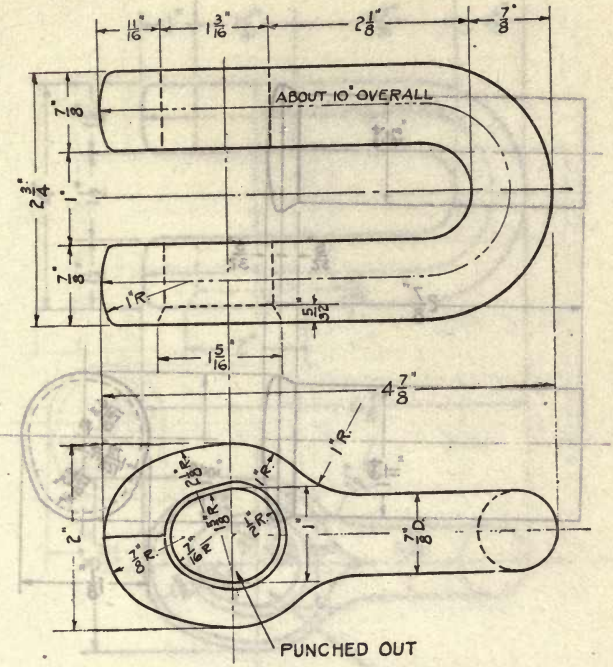

SHACKLE, CONNECTING, 3/4″ CHAIN CABLE

Weight (steel), **lbs.** **Die number, 3137-B**

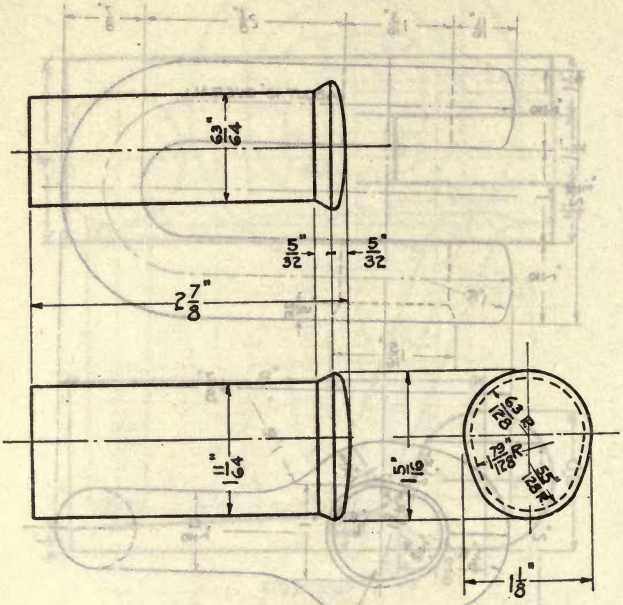

PIN, SHACKLE, CONNECTING, 3/4″ CHAIN CABLE

Weight (steel), **lbs.** **Die number, 3138-B**

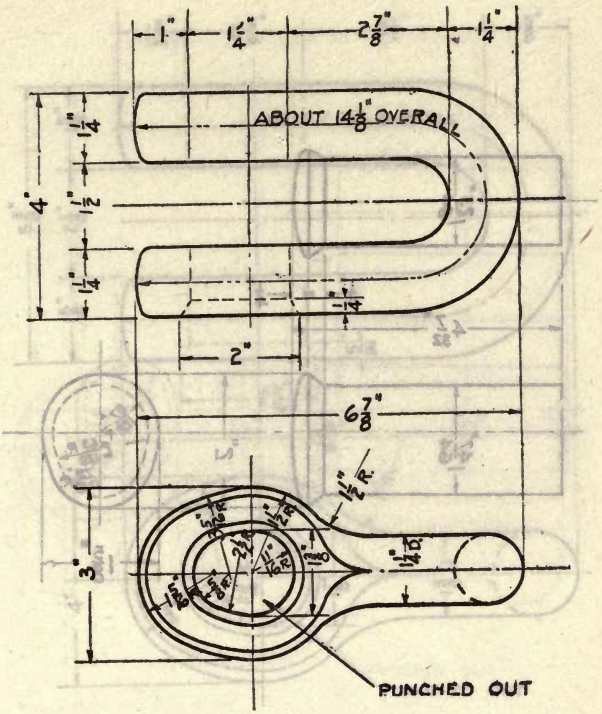

SHACKLE, CONNECTING, 1 1/8″ CHAIN CABLE

Weight (steel), lbs. **Die number, 3139-B**

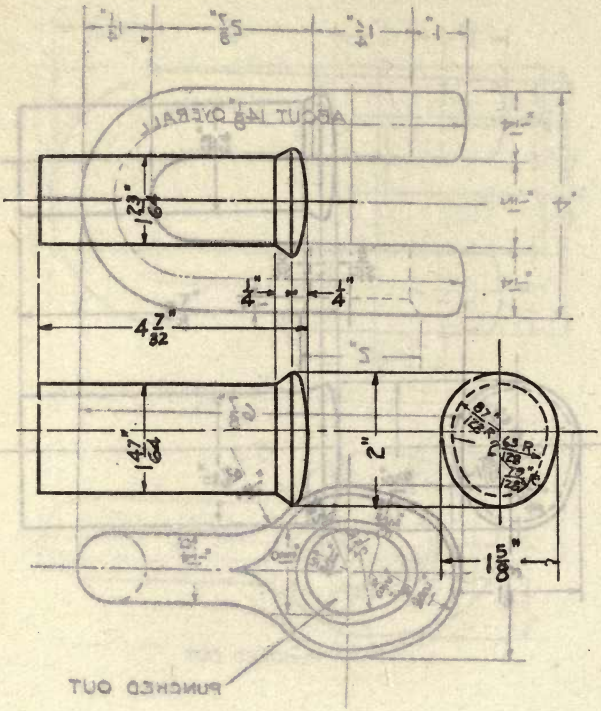

PIN, CONNECTING, 1 1/8″ CHAIN CABLE

Weight (steel), lbs. **Die number, 3140-B**

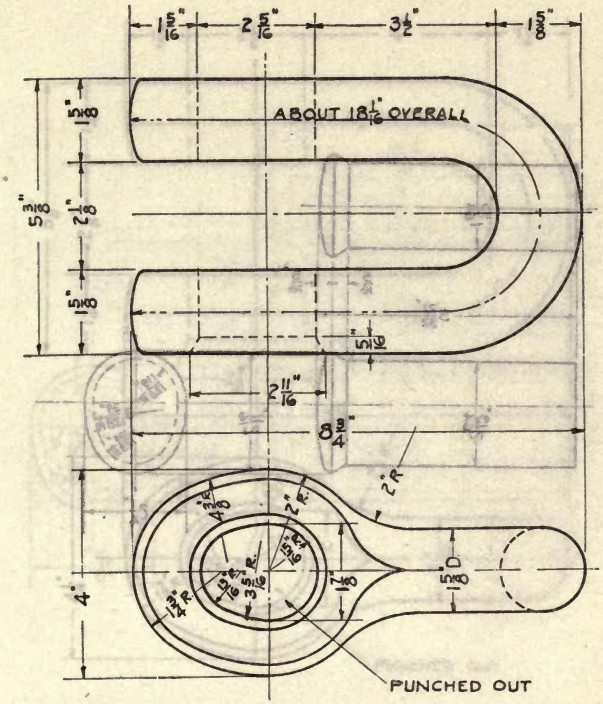

SHACKLE, CONNECTING, 1 3/8″ CHAIN CABLE

Weight (steel), **lbs.** **Die number, 3141-B**

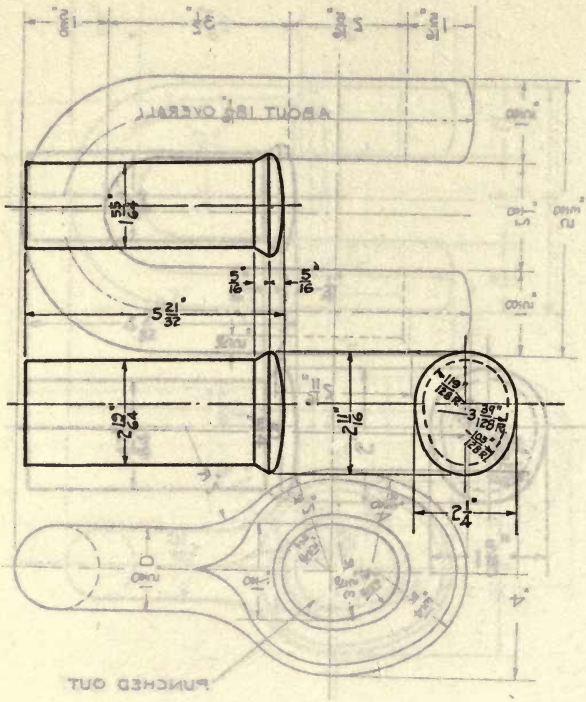

PIN, CONNECTING, 1 3/8″ CHAIN CABLE

Weight (steel), **lbs.** **Die number, 3142-B**

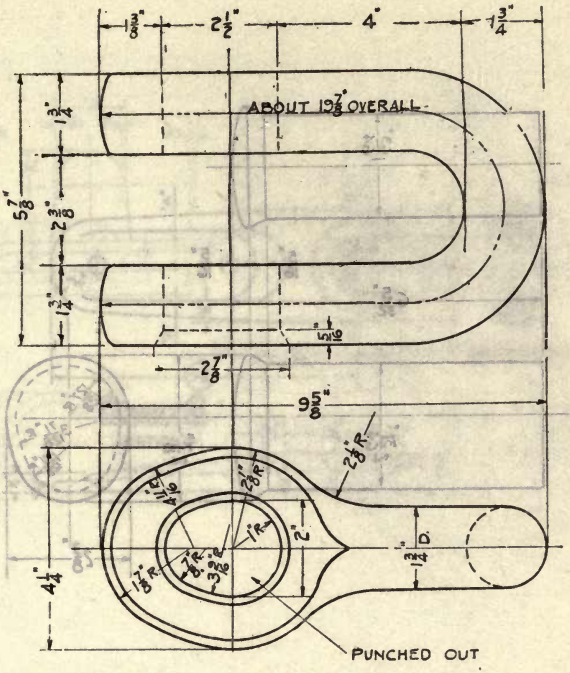

SHACKLE, CONNECTING, 1 1/2" CHAIN CABLE

Weight (steel), lbs. **Die number, 3143-B**

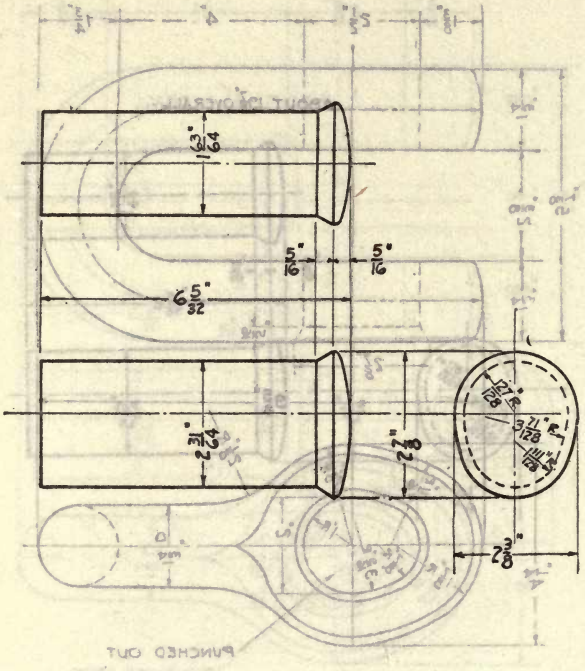

PIN, SHACKLE, CONNECTING, 1 1/2″ CHAIN CABLE

Weight (steel), **lbs.** **Die number, 3144-B**

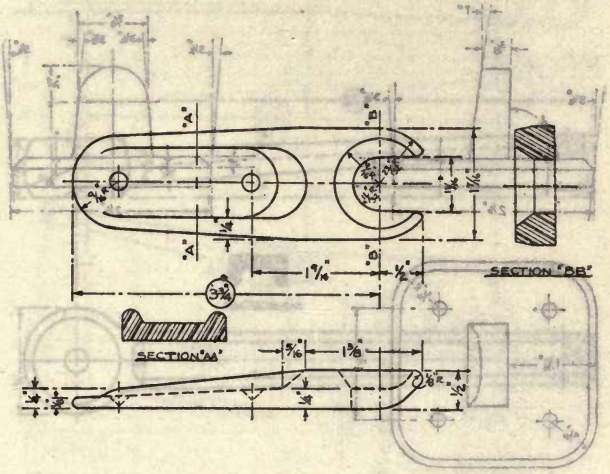

DOG, FLAT, 3 3/4″

Weight (steel), lbs. **Die number, 3145-M**

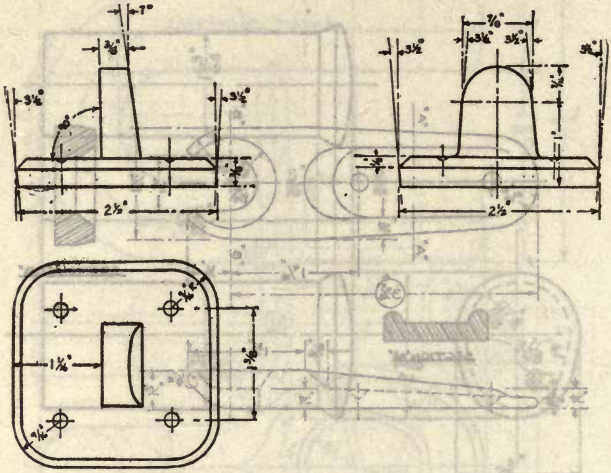

FITTINGS, TABLE, MESS

Pad, deck

Weight (steel), **lbs.** **Die number, 3146-M**

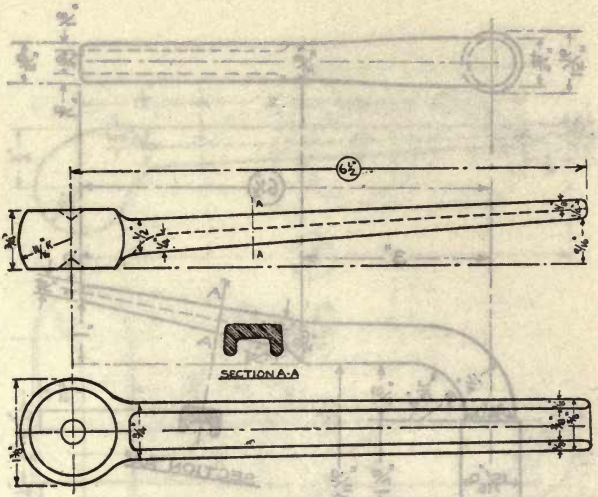

HANDLE, DOG, 6 1/2″

Weight (steel), lbs. Die number, 3147-M

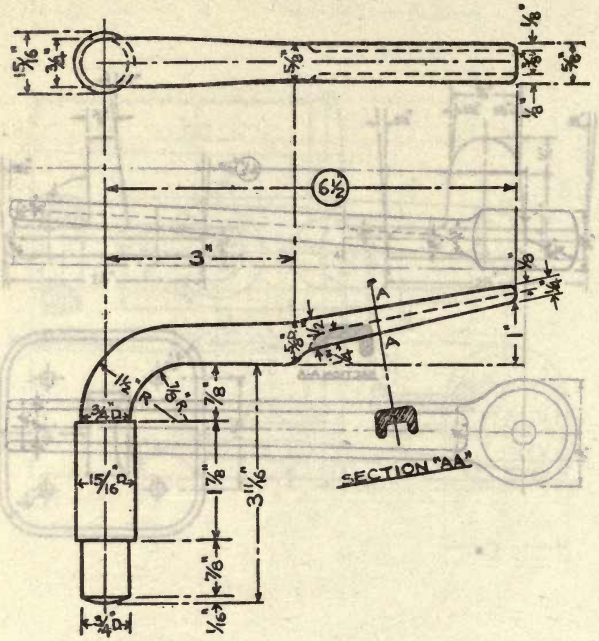

DOG, HANDLED, WITH SPINDLE, 6 1/2″

Weight (steel), lbs. **Die number, 3148-M**

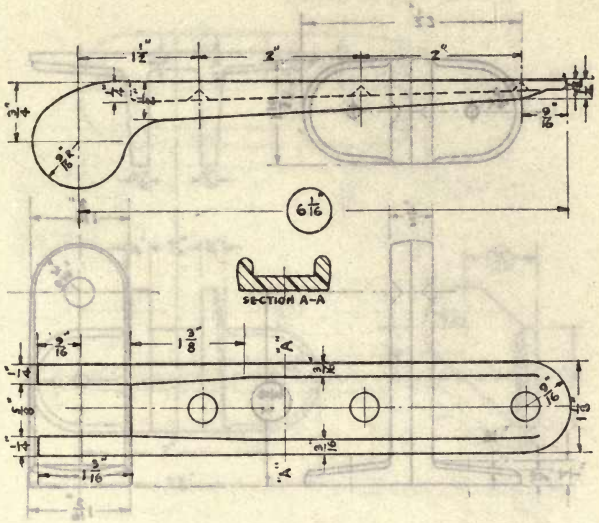

HINGE, FEMALE, 6 1/16″

(For male part see die number 3150)

Weight (steel), lbs. **Die number, 3149-M**

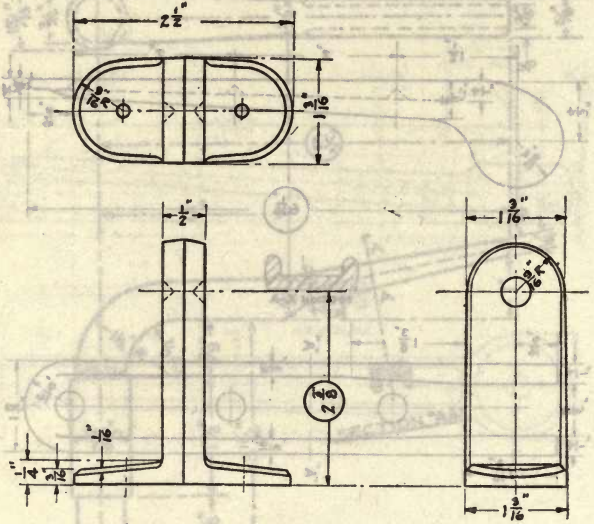

HINGE PAD, MALE, 2 3/8″

(For female part see die number 3149)

Weight (steel), lbs. Die number, 3150-M

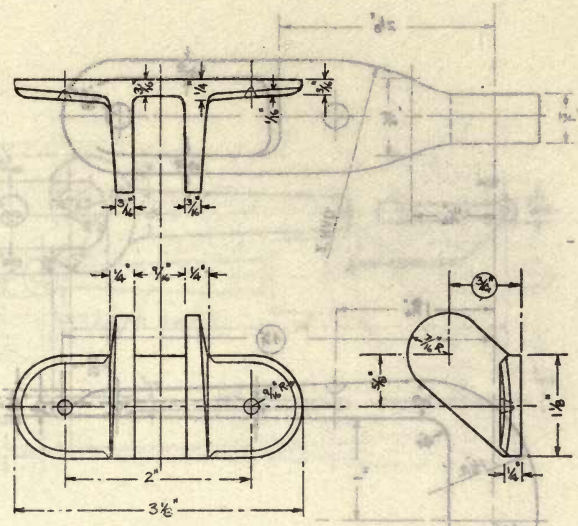

HINGE PAD, FEMALE, 3/4″

(For male part see die number 3152)

Weight (steel), lbs. **Die number, 3151-M**

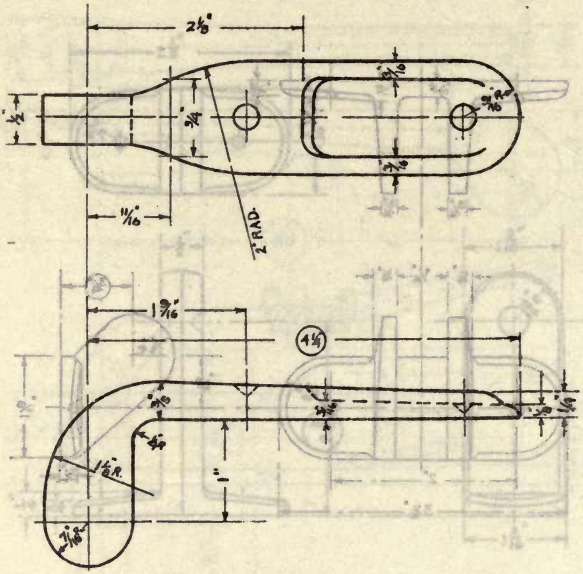

HINGE, MALE, 4 1/4"

(For female part see die number 3151)

Weight (steel), lbs. **Die number, 3152-M**

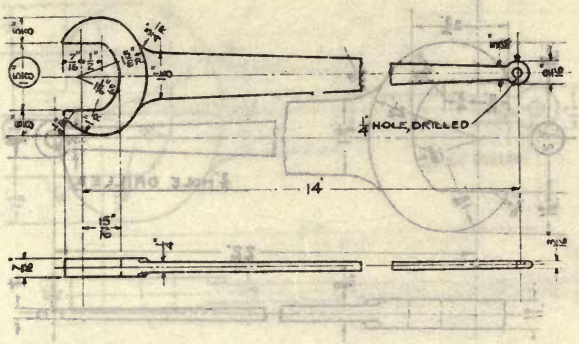

WRENCH, 1 5/8″

For housing chain stopper, for 5/8″, 3/4″, 7/8″, 1″, and 1 1/8″ chain cable

Weight (steel), lbs. **Die number, 3153-B**

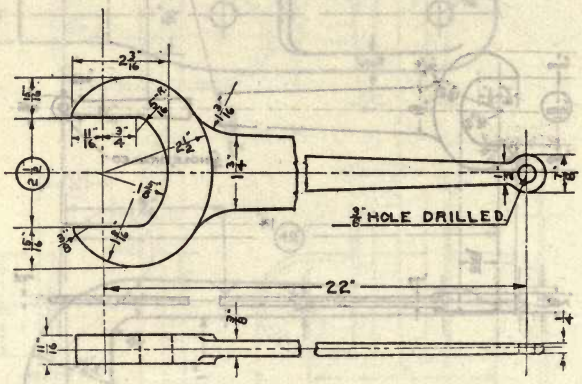

WRENCH, 2 1/2″

For housing chain stopper, for 1 1/4″ and 1 3/8″ chain cable

Weight (steel), lbs. Die number, 3154-B

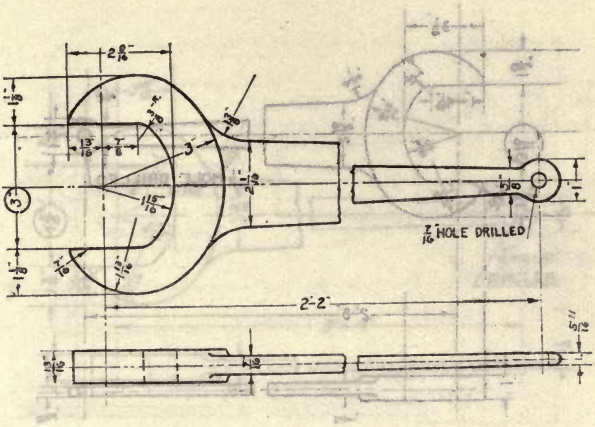

WRENCH, 3″

For housing chain stopper, for 1 1/2″ and 1 5/8″ chain cable

Weight (steel) lbs. Die number, 3155-B

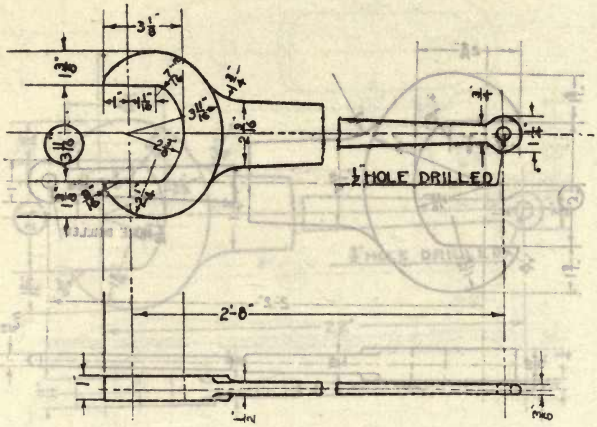

WRENCH, 3 11/16″

For housing chain stopper, for 1 3/4″, 1 7/8″, and 2″ chain cable

Weight (steel), lbs. Die number, 3156-B

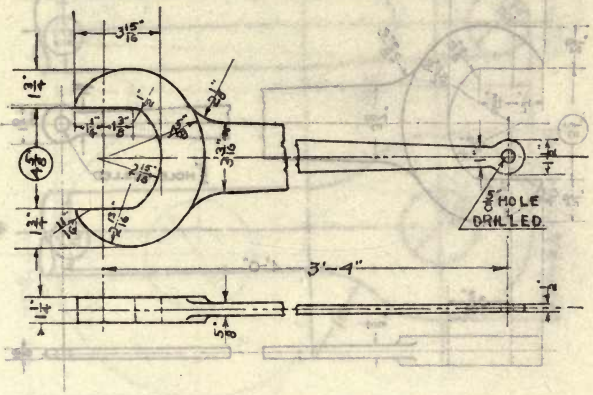

WRENCH, 4 5/8"

For housing chain stopper, for 2 1/4" and 2 1/2" chain cable

Weight (steel), **lbs.** **Die number, 3157-B**

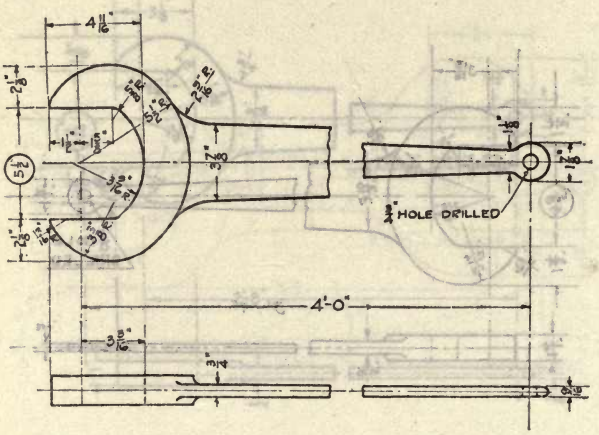

WRENCH, 5 1/2″

For housing chain stopper, for 2 5/8″, 2 3/4″, and 3″ chain cable

Weight (steel), • lbs. Die number, 3158-B

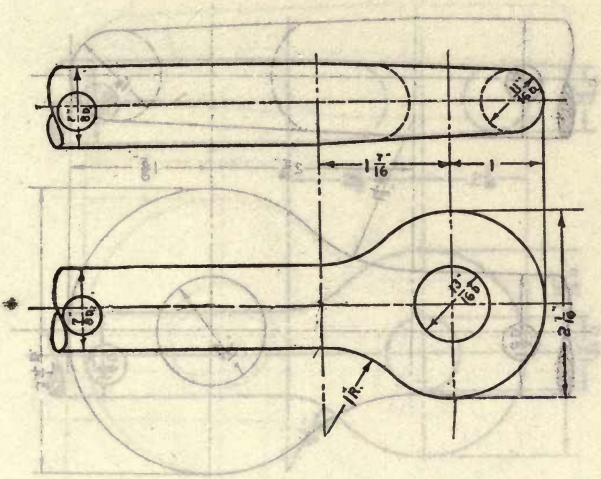

BOLT, EYE, 7/8″

Eye, 13/16″, Length, open die

Weight (steel), lbs. **Die number, 3159-B**

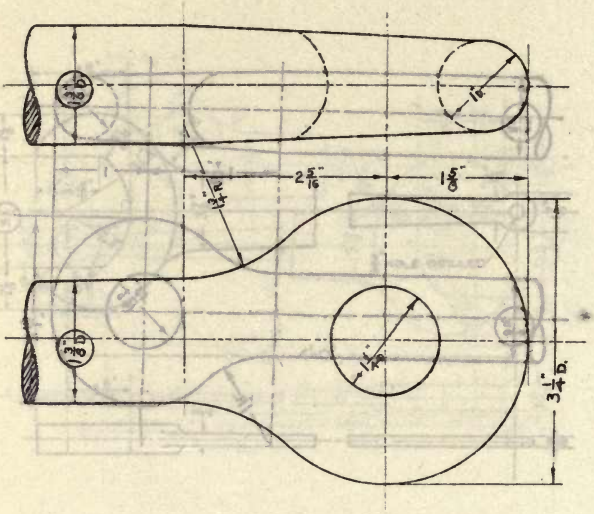

BOLT, EYE, 1 3/8″

Eye, 1 1/4″ Length, open die

Weight (steel), lbs. Die number, 3160-B

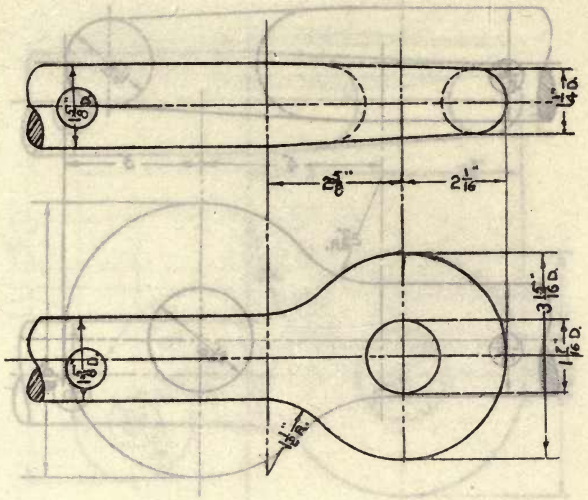

BOLT, EYE, 1 5/8″

Eye, 1 7/16″ Length, open die

Weight (steel), lbs. Die number, 3161-B

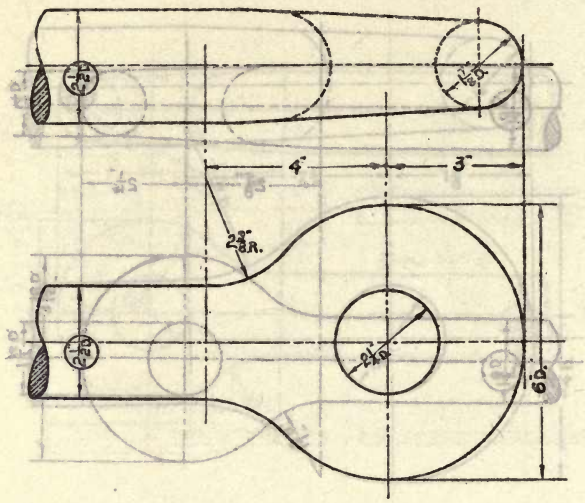

BOLT, EYE, 2 1/2″

Eye, 2 1/4″ Length, open die

Weight (steel), lbs. Die number, 3162-B

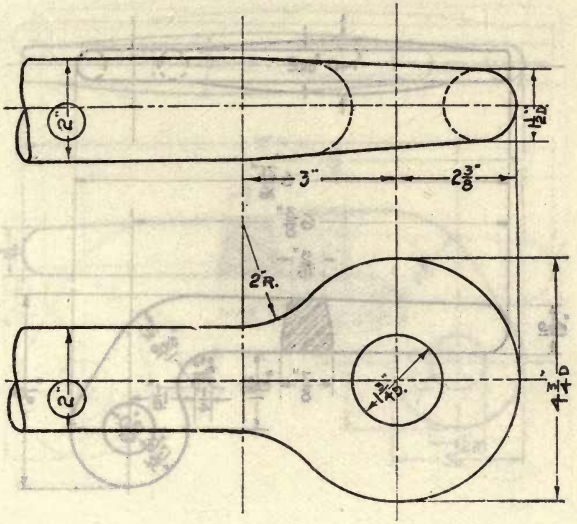

BOLT, EYE, 2″

Eye, 1 3/4″ Length, open die

Weight (steel), lbs. Die number, 3163-B

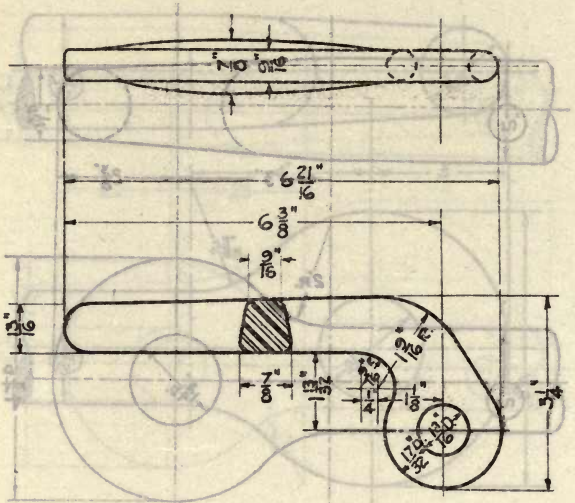

HOOK, PELICAN, 7/8″ CHAIN

For housing chain stopper, for 5/8″, 3/4″, 7/8″, 1″, and 1 1/8″ chain cable

Weight (steel), lbs. **Die number, 3164-B**

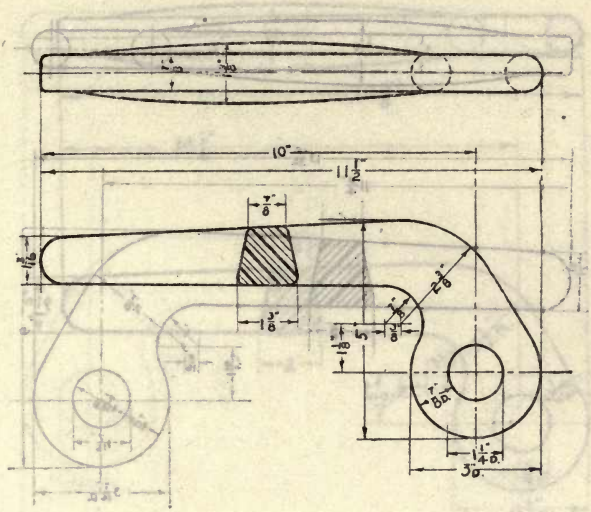

HOOK, PELICAN, 1 3/8" CHAIN

For housing chain stopper, for 1 1/4" and 1 3/8" chain cable

Weight (steel), lbs. **Die number, 3165-B**

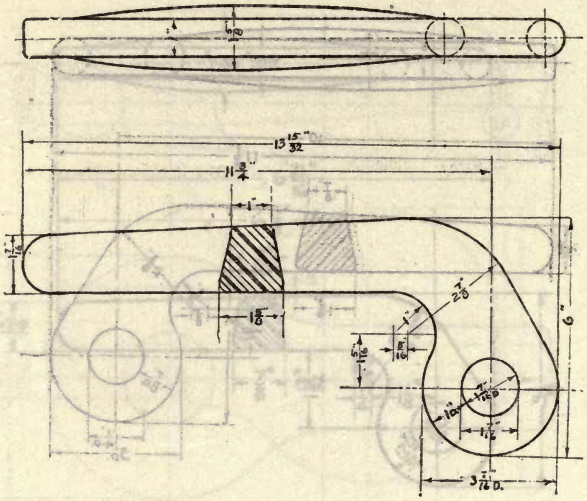

HOOK, PELICAN, 1 5/8″ CHAIN

For housing chain stopper, for 1 1/2″ and 1 5/8″ chain cable

Weight (steel), lbs. **Die number, 3166-B**

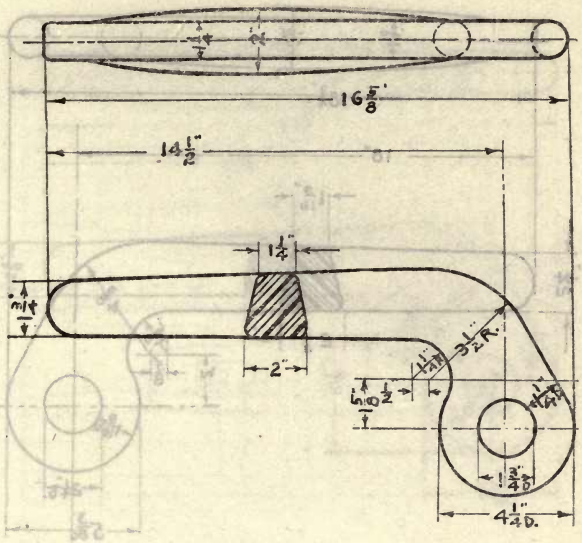

HOOK, PELICAN, 2″ CHAIN

For housing chain stopper, for 1 3/4″, 1 7/8″, and 2″ chain cable

Weight (steel), **lbs.** **Die number, 3167-B**

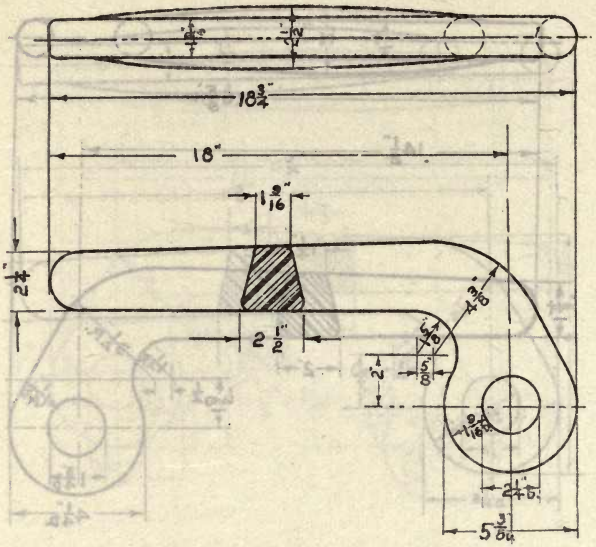

HOOK, PELICAN, 2 1/2″ CHAIN

For housing chain stopper, for 2 1/4″ and 2 1/2″ chain cable

Weight (steel), lbs. **Die number, 3168-B**

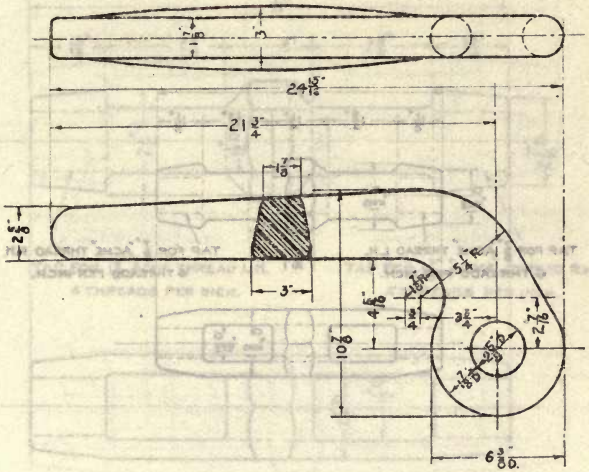

HOOK, PELICAN, 3″ CHAIN

For housing chain stopper, for 2 5/8″, 2 3/4″, and 3″ chain cable

Weight (steel), **lbs.** **Die number, 3169-B**

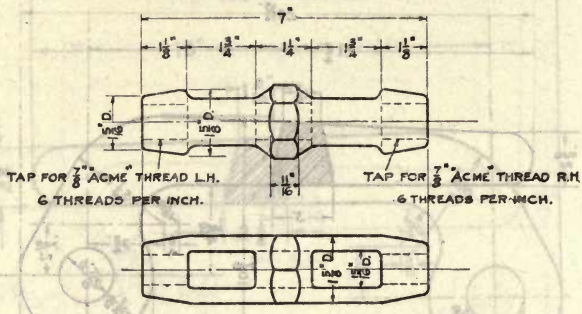

TURNBUCKLE, 7/8″

For housing chain stopper, for 5/8″, 3/4″, 7/8″, 1″, and 1 1/8″ chain cable

Weight (steel), lbs. **Die number, 3170-B**

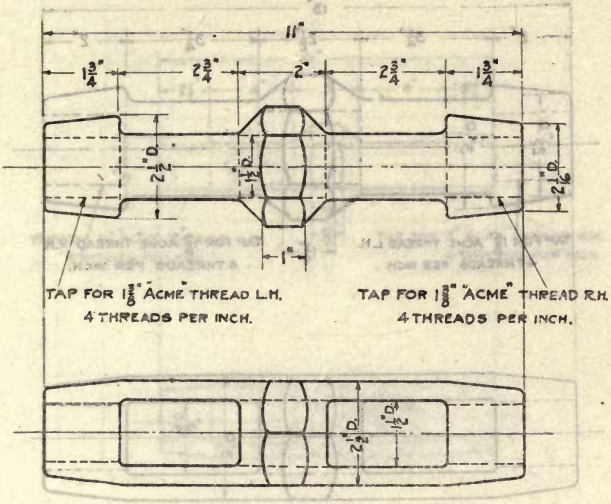

TURNBUCKLE, 1 3/8″

For housing chain stopper, for 1 1/4″ and 1 3/8″ chain cable

Weight (steel), lbs. **Die number, 3171-B**

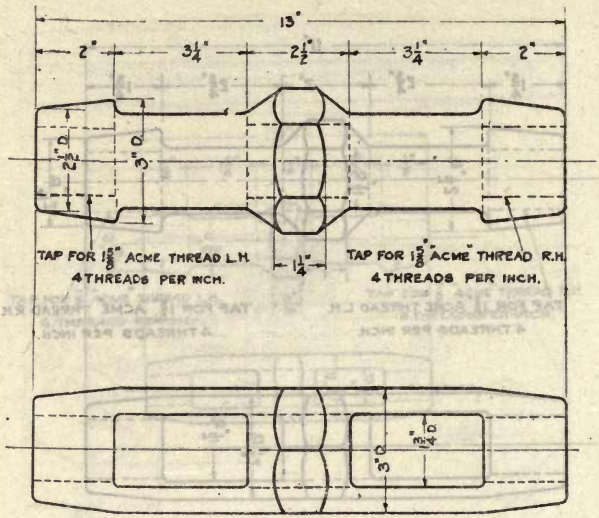

TURNBUCKLE, 1 5/8″

For housing chain stopper, for 1 1/2″ and 1 5/8″ chain cable

Weight (steel), lbs. **Die number, 3172-B**

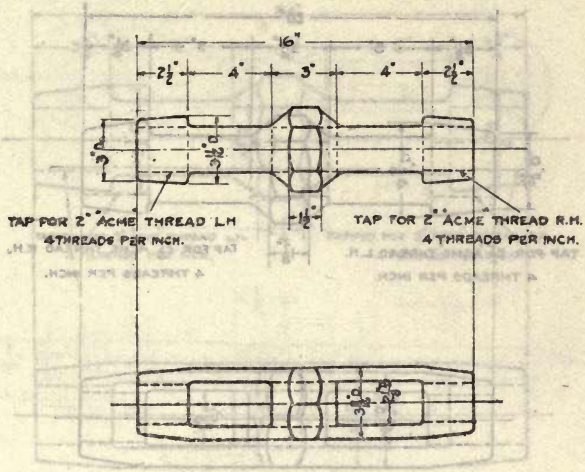

TURNBUCKLE, 2″

For housing chain stopper, for 1 3/4″, 1 7/8″, and 2″ chain cable

Weight (steel), lbs. Die number, 3173-B

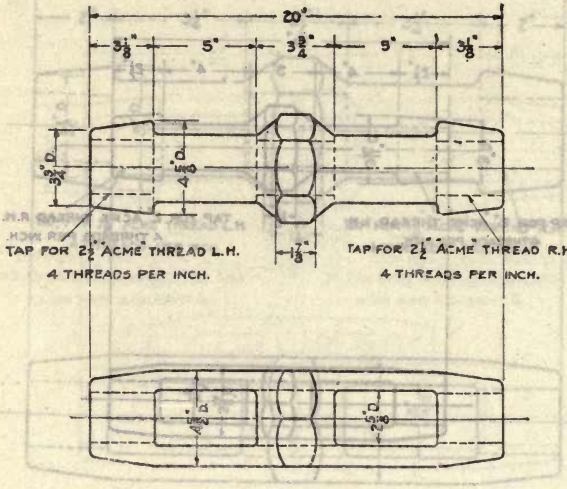

TURNBUCKLE, 2 1/2″

For housing chain stopper, for 2 1/4″ and 2 1/2″ chain cable

Weight (steel), lbs. **Die number, 3174-B**

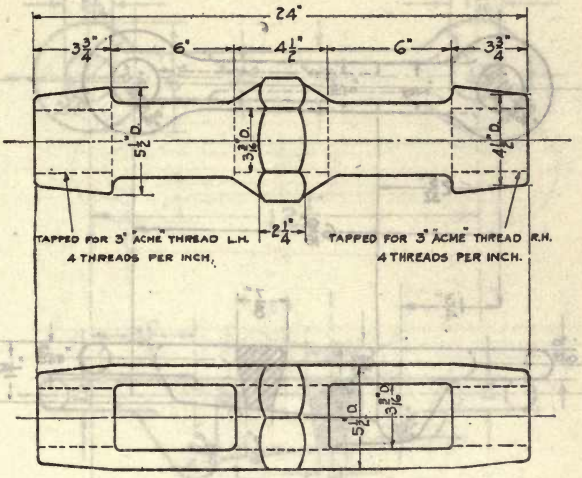

TURNBUCKLE, 3″

For housing chain stopper, for 2 5/8″, 2 3/4″, and 3″ chain cable

Weight (steel), lbs. **Die number, 3175-B**

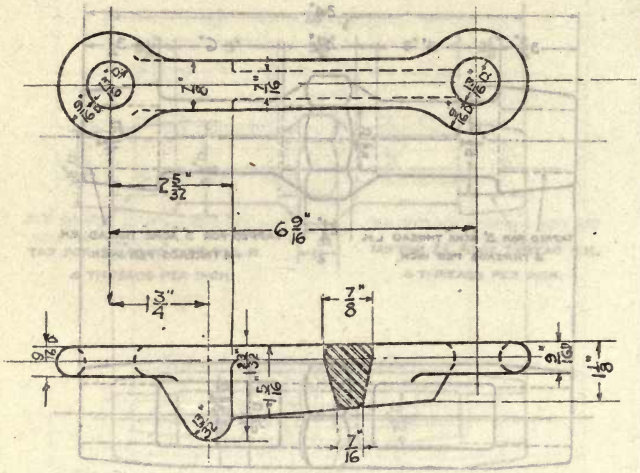

STRONGBACK

For housing chain stopper for 5/8", 3/4", 7/8", 1", and 1 1/8" chain cable

Weight (steel), lbs. Die number, 3176-B

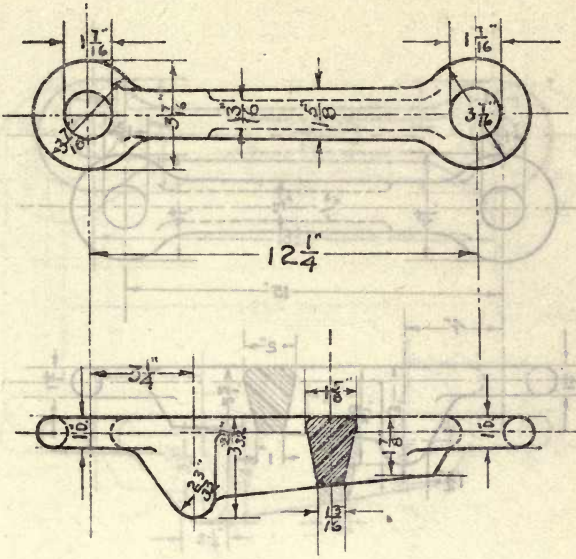

STRONGBACK

For housing chain stopper for 1 1/2" and 1 5/8" chain cable

Weight (steel), **lbs.** **Die number, 3177-B**

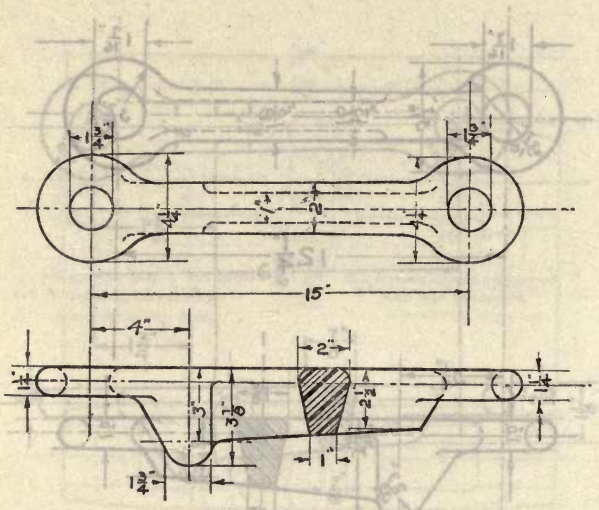

STRONGBACK

For housing chain stopper for 1 3/4", 1 7/8", and 2" chain cable

Weight (steel), **lbs.** **Die number, 3178-B**

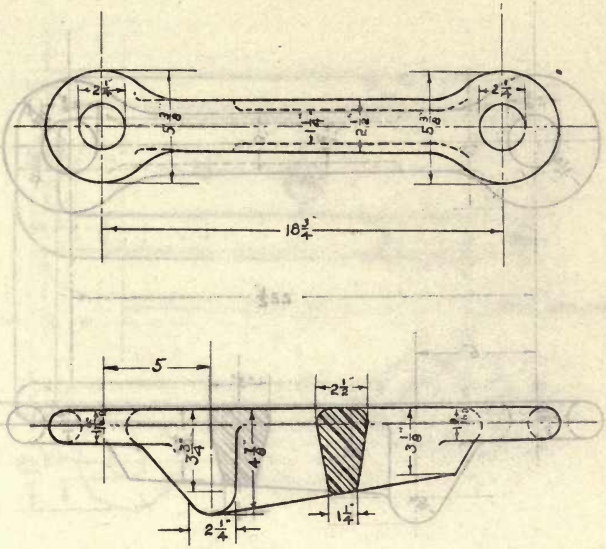

STRONGBACK

For housing chain stopper for 2 1/4" and 2 1/2" chain cable

Weight (steel), **lbs.** **Die number, 3179-B**

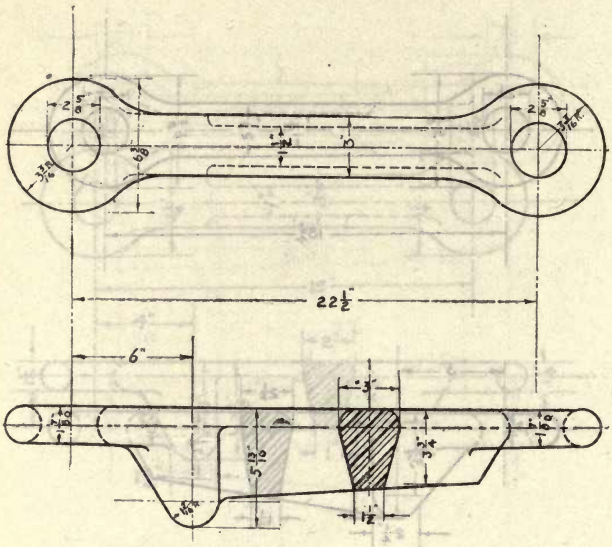

STRONGBACK

For housing chain stopper for 2 5/8", 2 3/4", and 3" chain cable

Weight (steel), lbs. Die number, 3180-B

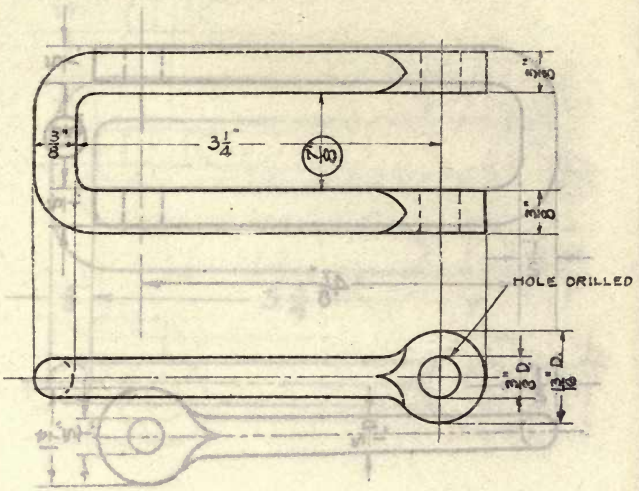

BAIL, 7/8″ CHAIN

For housing chain stopper, for 5/8″, 3/4″, 7/8″, 1″, and 1 1/8″ chain cable

Weight (steel), **lbs.** **Die number, 3181-B**

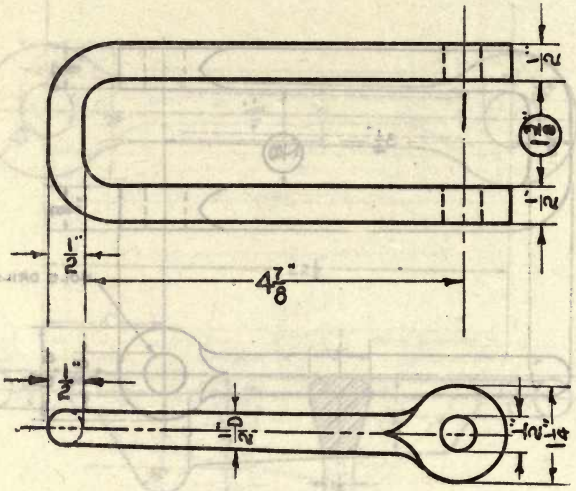

BAIL, 1 3/8″ CHAIN

For housing chain stopper, for 1 1/4″ and 1 3/8″ chain cable

Weight (steel), **lbs.** **Die number, 3182-B**

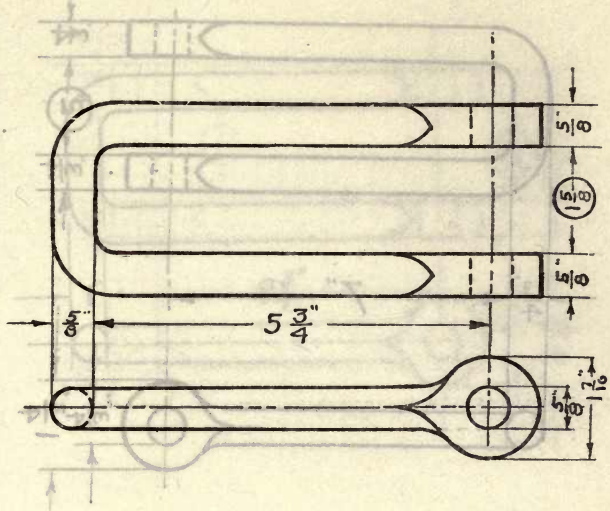

BAIL, 1 5/8″ CHAIN

For housing chain stopper, for 1 1/2″ and 1 5/8″ chain cable

Weight (steel), lbs. **Die number, 3183-B**

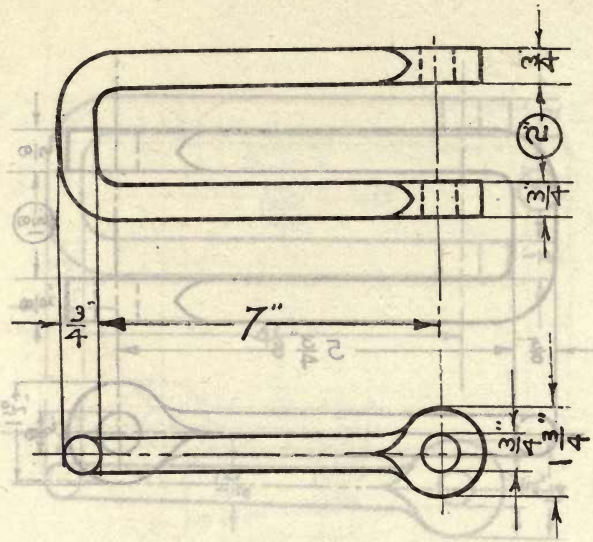

BAIL, 2″ CHAIN

For housing chain stopper, for 1 3/4″, 1 7/8″, and 2″ chain cable

Weight (steel), lbs. **Die number, 3184-B**

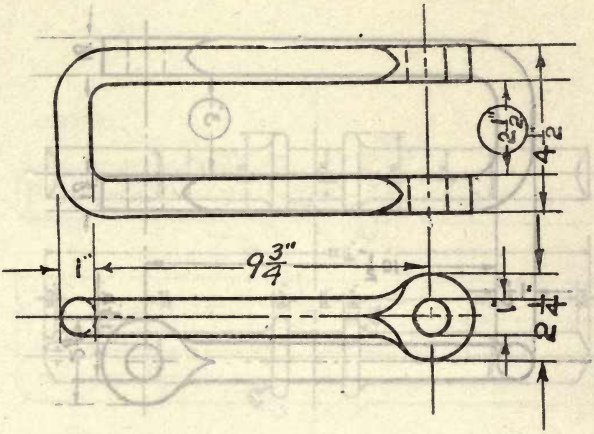

BAIL, 2 1/2″ CHAIN

For housing chain stopper, for 2 1/4″ and 2 1/2″ chain cable

Weight (steel), lbs. **Die number, 3185-B**

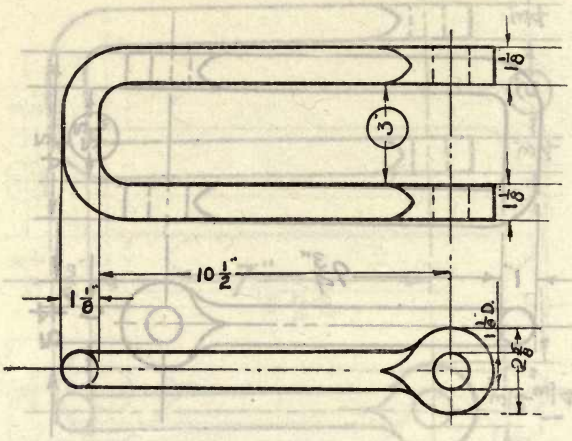

BAIL, 3″ CHAIN

For housing chain stopper, for 2 5/8″, 2 3/4″, and 3″ chain cable

Weight (steel), lbs. **Die number, 3186-B**

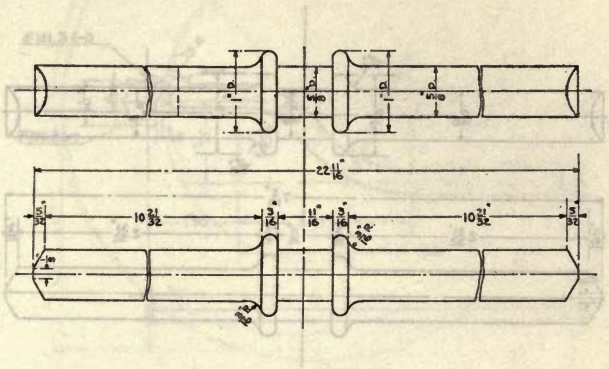

FITTINGS, TABLE, MESS

BRACE, LEG

Weight (steel), **lbs.** **Die number, 3187-N**

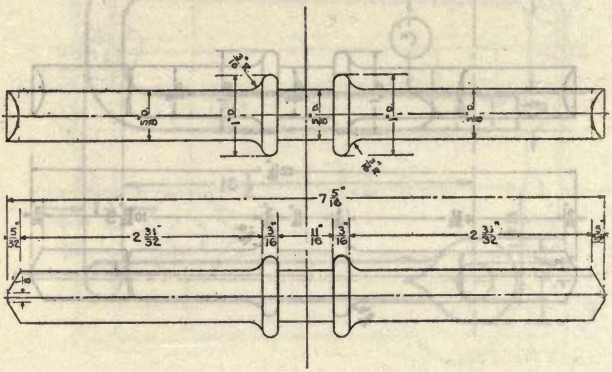

FITTINGS, BENCH, MESS

BRACE, LEG

Weight (steel), lbs. **Die number, 3188-N**

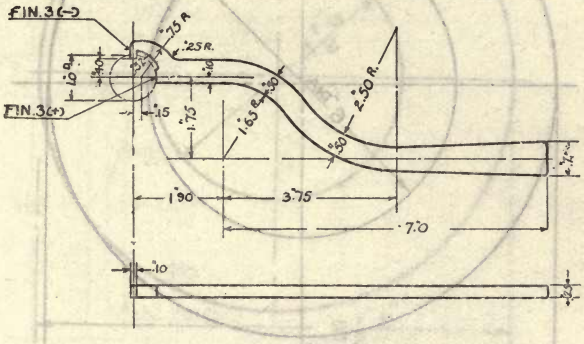

WRENCH, SPANNER

Used with 4" mount Mark XII

Weight, lbs. **Die number, 3189-B**

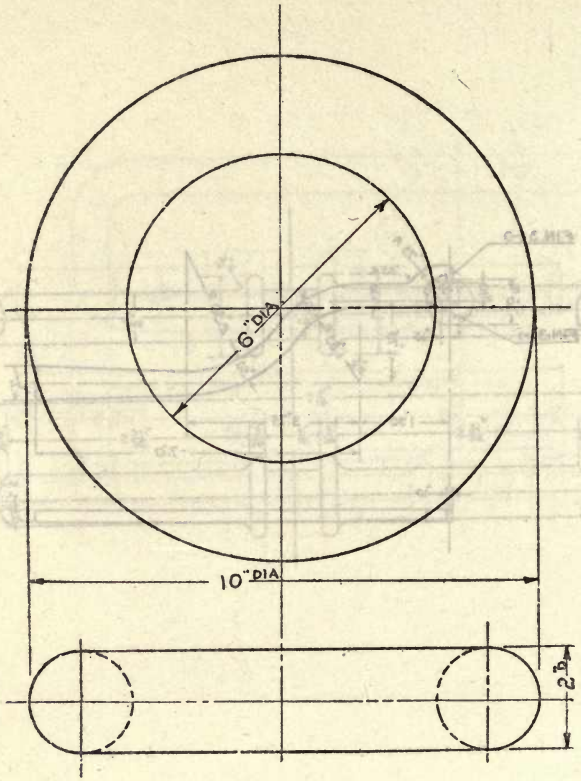

RING, 6″ x 2″

For 12 ft. mine sweep kite

Weight (steel), **lbs.** **Die number, 3190-B**

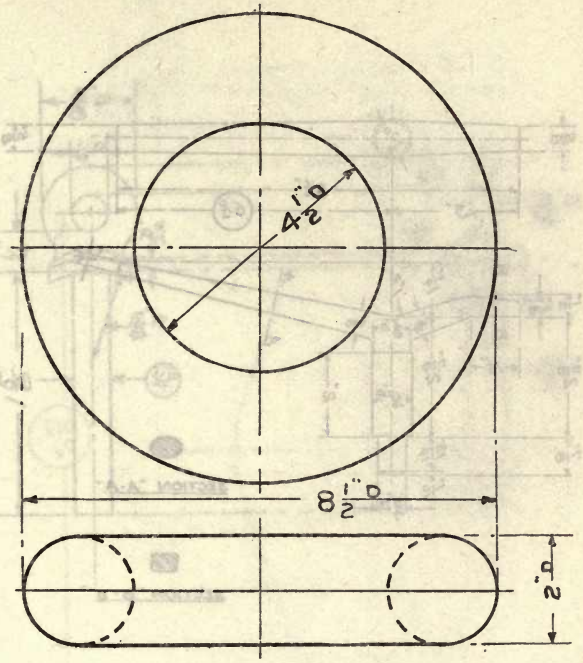

RING, 4 1/2″ x 2″

For 6 ft. and 9 ft. mine sweep kites

Weight (steel), **lbs.** **Die number, 3191-B**

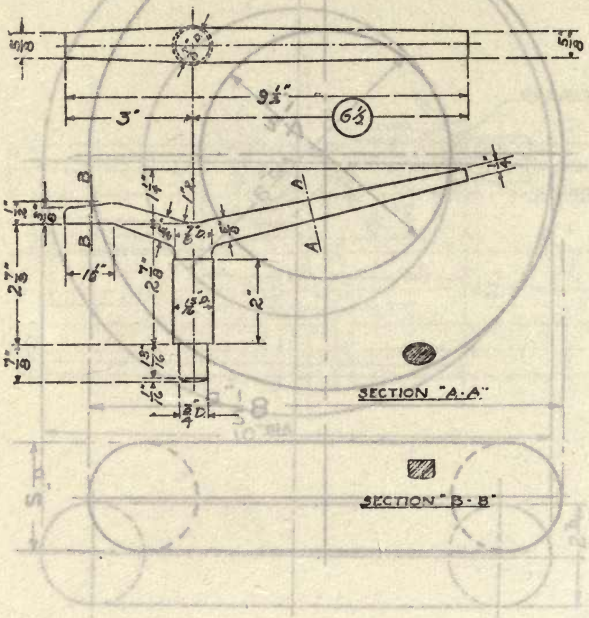

DOG, HANDLED, WITH SPINDLE, 6 1/2″

Weight (steel), **lbs.** **Die number, 3192-M**

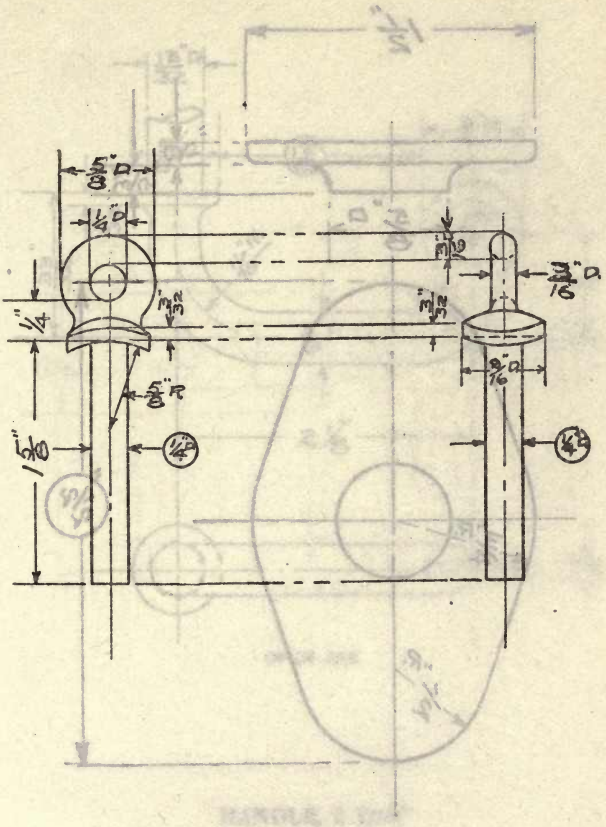

BOLT, EYE, COLLAR, 1/4″

Eye, 1/4″ Length, 1 5/8″

Weight (steel), lbs. Die number, 3193-M

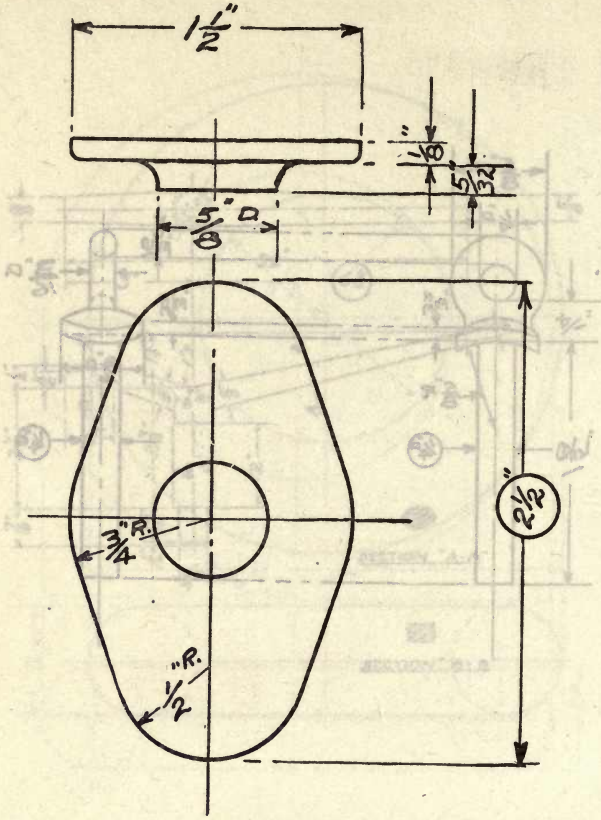

PLATE, FACE, HANDLE, 2 1/2″

Used with dies 3195-M and 3196-M

Weight (brass), lbs. **Die number, 3194-M**

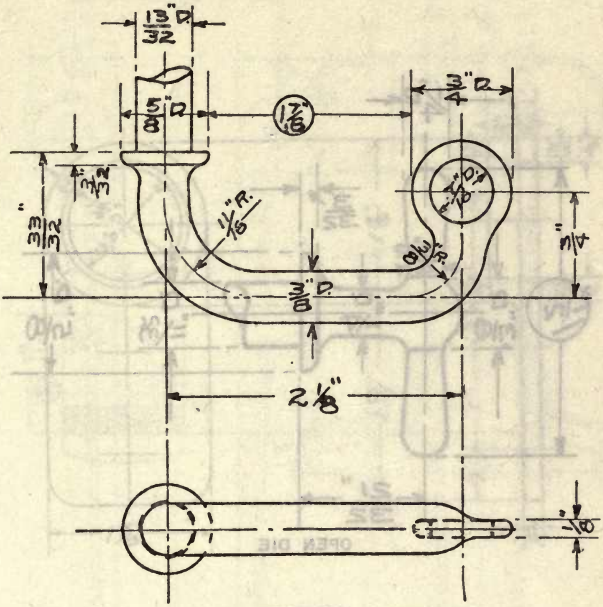

OPEN DIE

HANDLE, 1 7/16″

Used with die 3194-M

Weight (brass), **lbs.** **Die number, 3195-M**

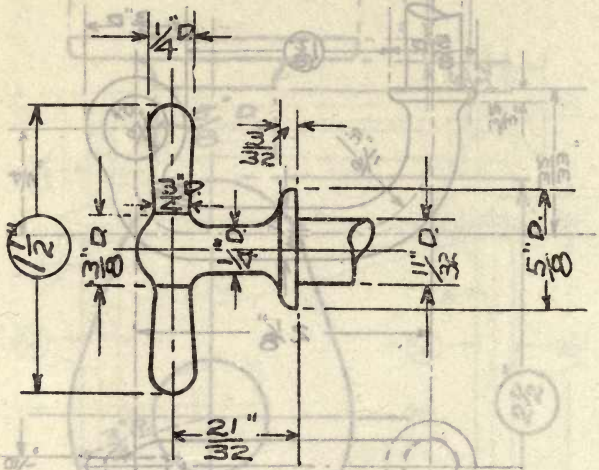

HANDLE, 1 1/2"

Used with die 3194-M

Weight (brass), lbs. **Die number, 3196-M**

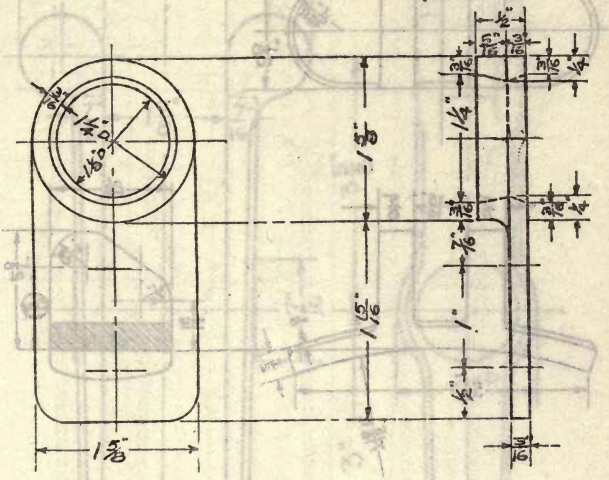
1 5/8"
1 5/8"
1 5/8"
1 1/4"
1/4"
1/4"

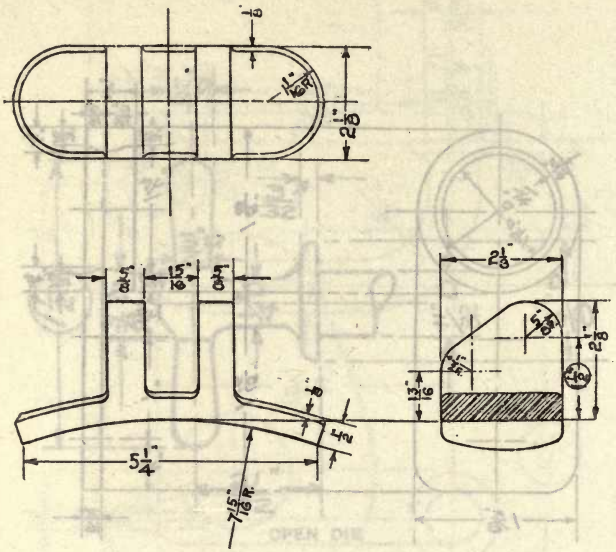

HINGE PAD, FEMALE, 1 1/2″

Size of pad, 5 1/4″ x 2 1/8″ x 1/2″

Used as drop bolt pad

Weight (steel), lbs. Die number, 3198-B

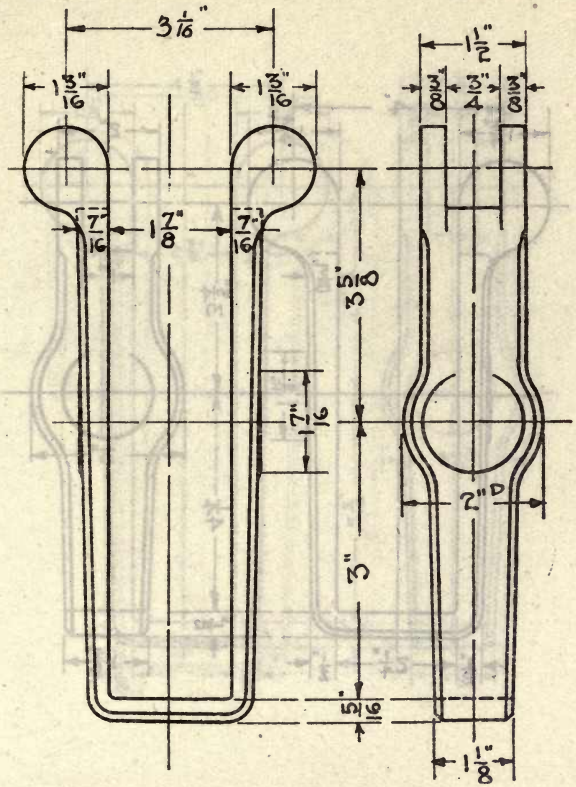

STRAP, BLOCK, METAL, SNATCH, 8″

Weight, lbs. **Die number, 3199-YM**

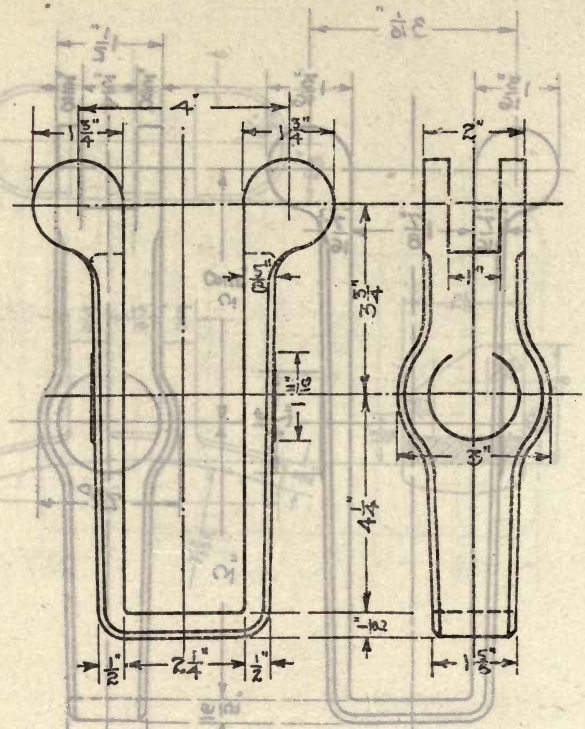

STRAP, BLOCK, METAL, SNATCH, 10″

Weight, lbs. **Die number, 3200-YM**

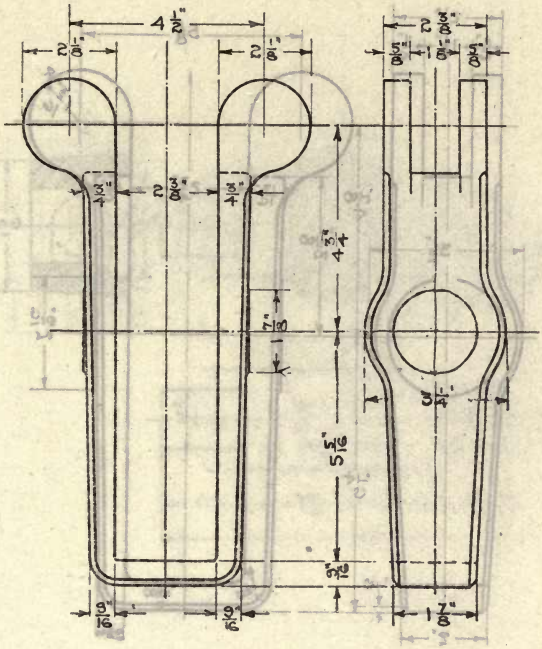

STRAP, BLOCK, METAL, SNATCH, 12″

Weight, lbs. Die number, 3201-YM

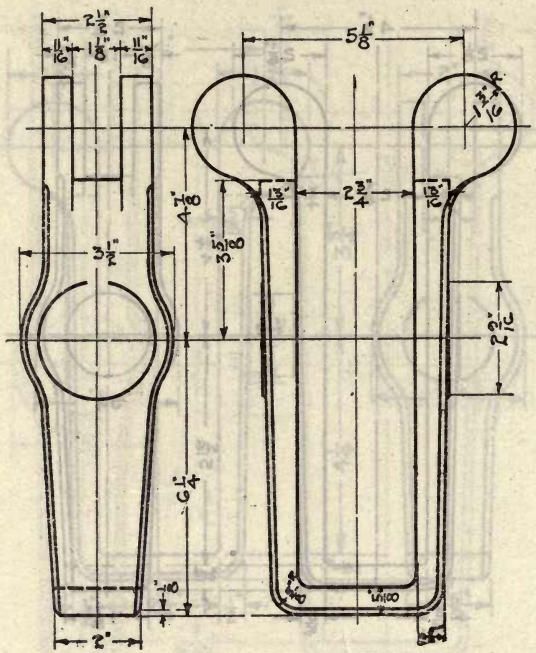

STRAP, BLOCK, METAL, SNATCH, 14″

Weight, lbs. **Die number, 3202-YM**

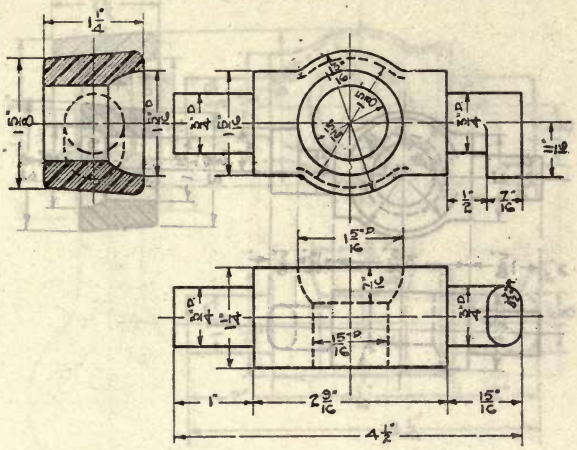

CROSSHEAD, BLOCK, METAL, SNATCH, 8″

Weight, lbs. Die number, 3203-YM

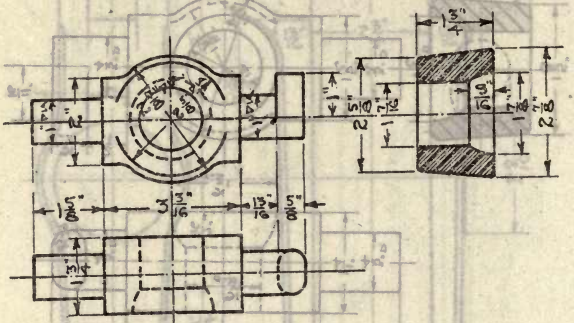

CROSSHEAD, BLOCK, METAL, SNATCH, 10″

Weight, lbs. **Die number, 3204-YM**

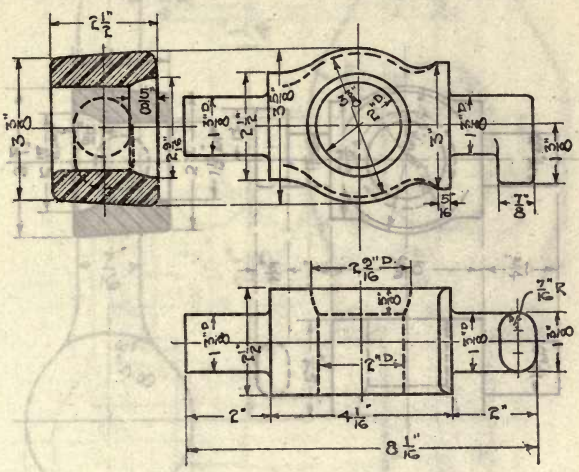

CROSSHEAD, BLOCK, METAL, SNATCH, 14″

Weight, lbs. **Die number, 3205-YM**

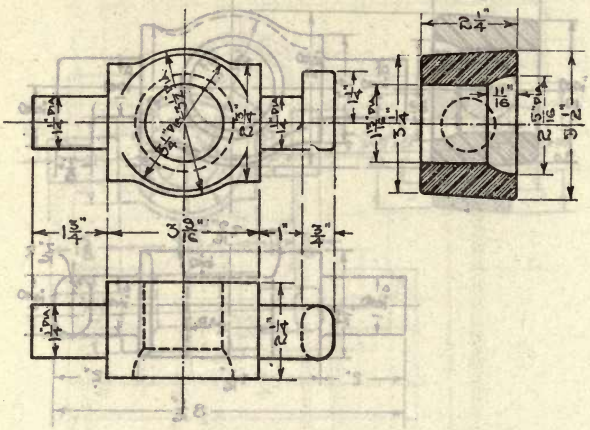

CROSSHEAD, BLOCK, METAL, SNATCH, 12″

Weight, lbs. Die number, 3206-YM

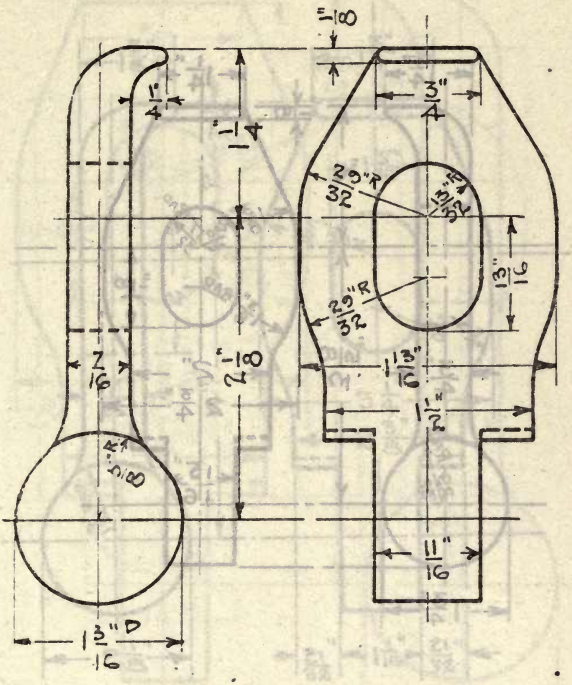

HASP, BLOCK, METAL, SNATCH, 8″

Weight, lbs. Die number, 3207-YM

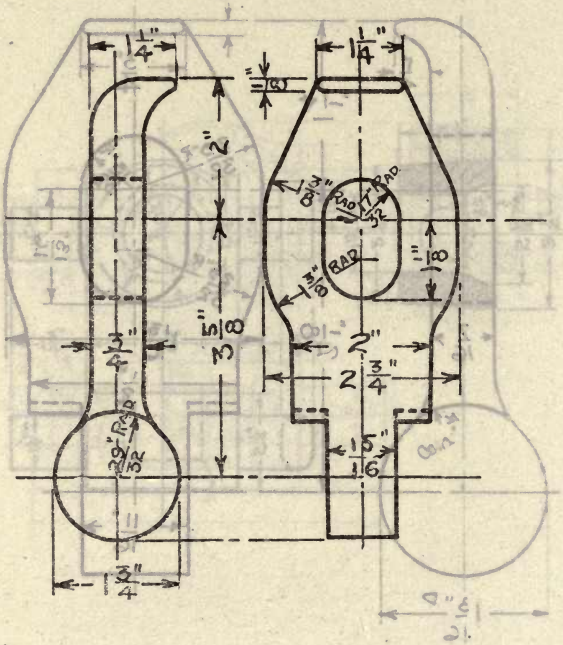

HASP, BLOCK, METAL, SNATCH, 10″

Weight, lbs. **Die number, 3208-YM**

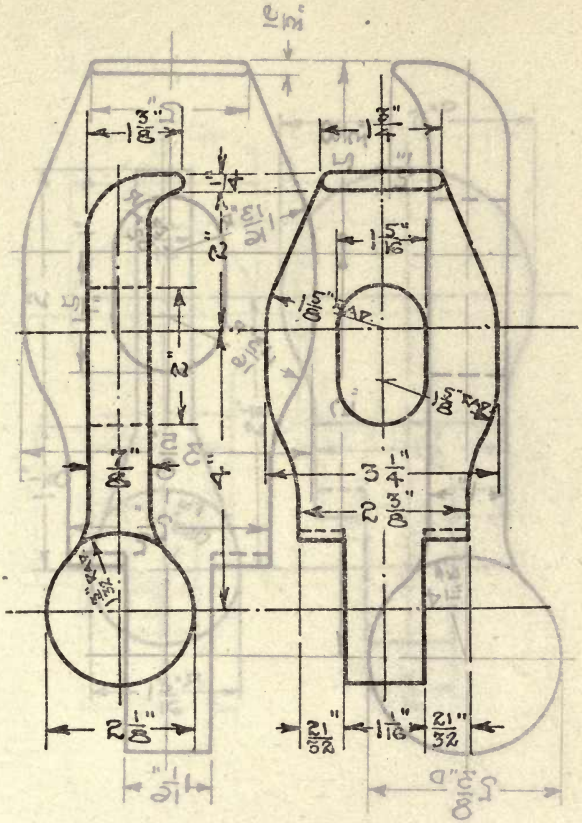

HASP, BLOCK, METAL, SNATCH, 12″

Weight, lbs. **Die number, 3209-YM**

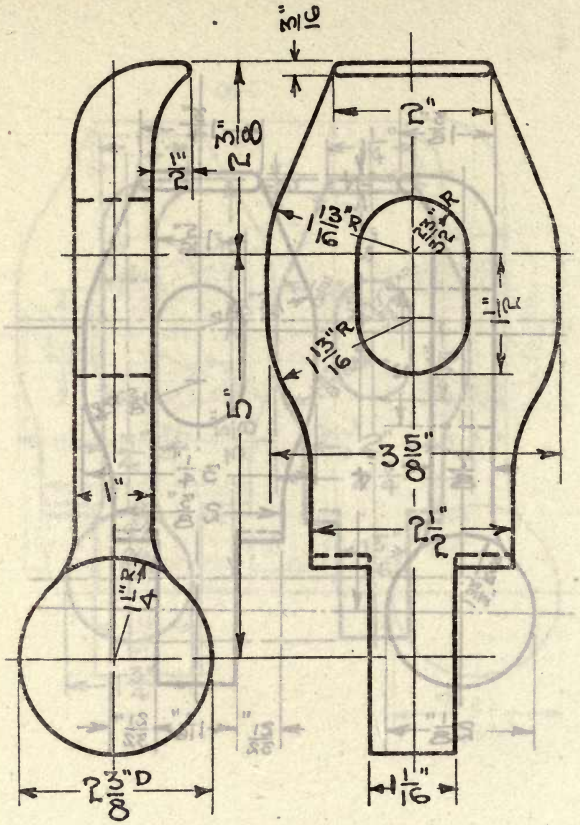

HASP, BLOCK, METAL, SNATCH, 14″

Weight, lbs. **Die number, 3210-YM**

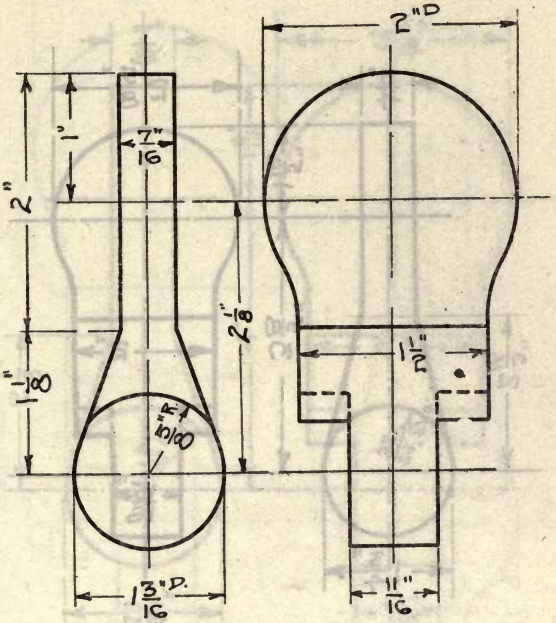

LINK, BLOCK, METAL, SNATCH, 8″

Weight, lbs. Die number, 3211-YM

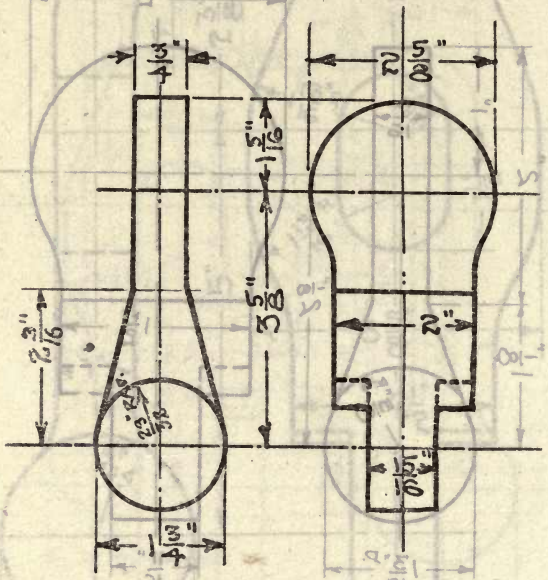

LINK, BLOCK, METAL, SNATCH, 10″

Weight, lbs. **Die number, 3212-YM**

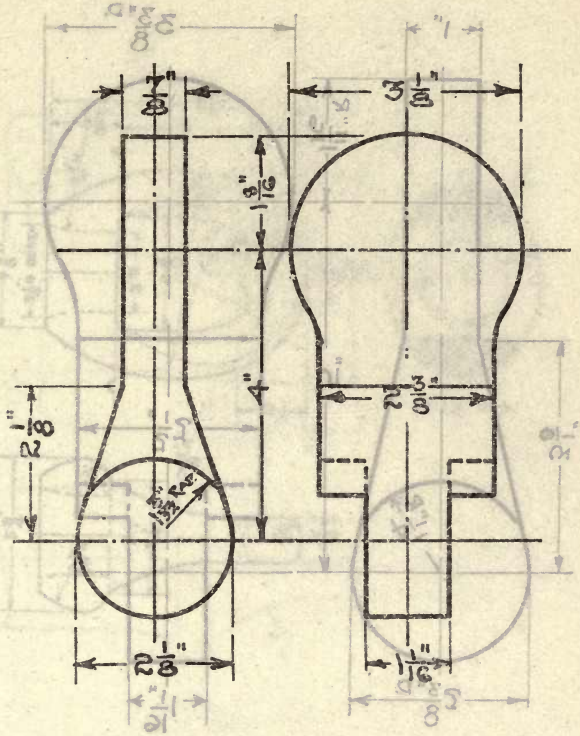

LINK, BLOCK, METAL, SNATCH, 12″

Weight, lbs. **Die number, 3213-YM**

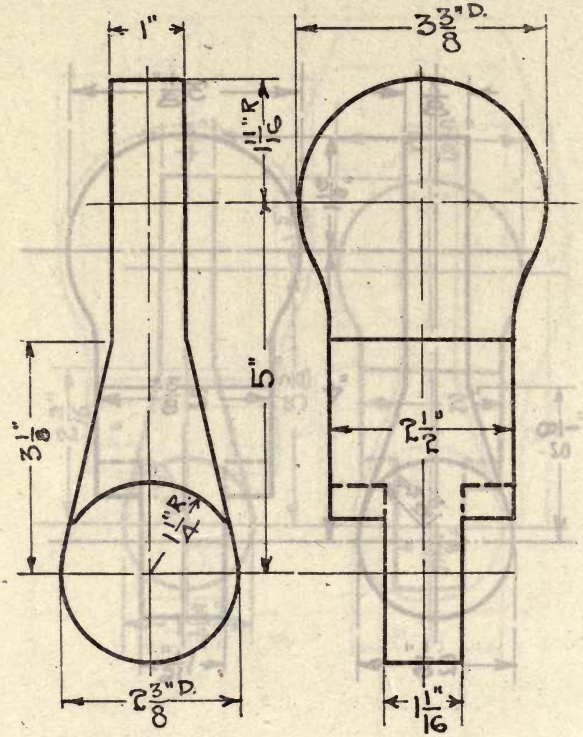

LINK, BLOCK, METAL, SNATCH, 14″

Weight, lbs. **Die number, 3214-YM**

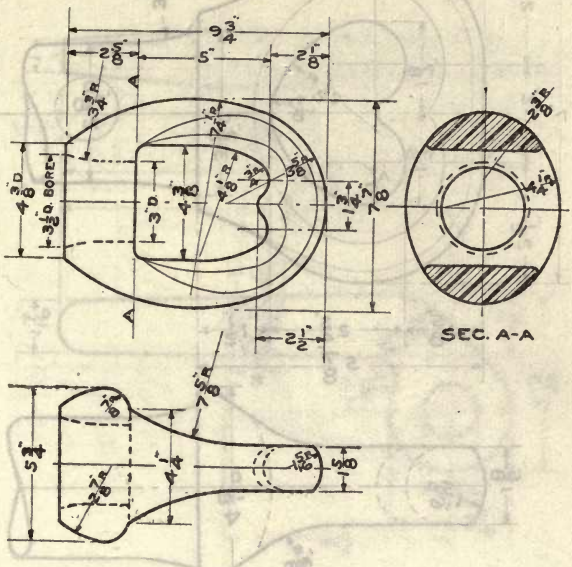

BOX, MOORING SWIVEL

1", 1 1/8", and 1 1/4" Chain Cables

Weight, lbs. Die number, 3215-B

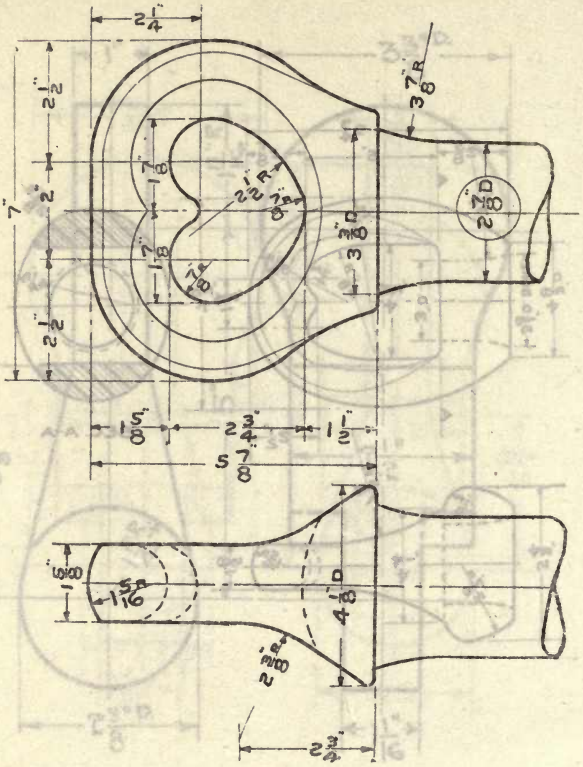

OPEN DIE

EYE, MOORING SWIVEL, 2 7/8″

Weight, lbs. Die number, 3216-B

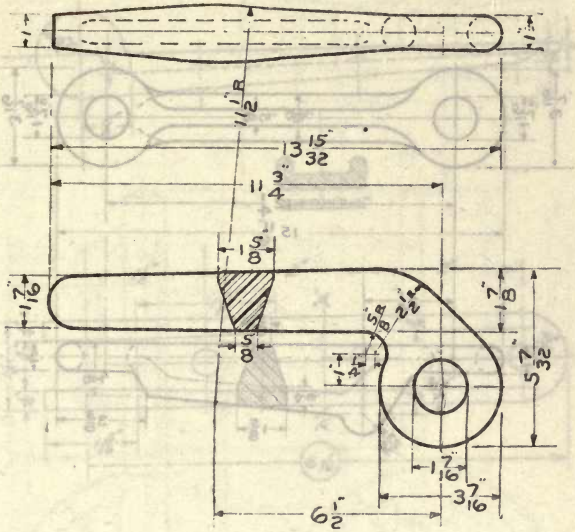

HOOK, PELICAN, 7/8″ AND 1″ CHAIN CABLES

Housing chain stopper for destroyers

Weight, **lbs.** **Die number, 3217-B**

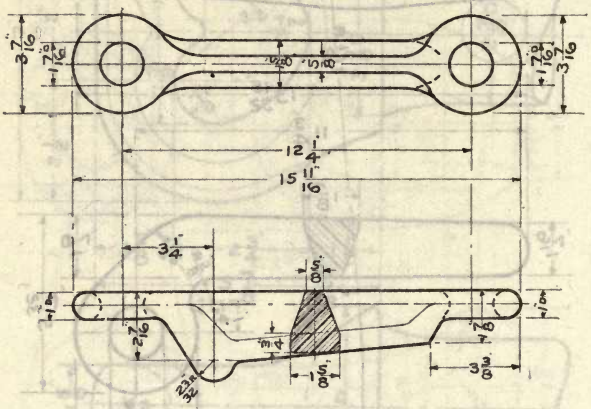

STRONGBACK

For housing chain stopper for 7/8″ and 1″ chain cables for destroyers

Weight, lbs. **Die number, 3218-B**

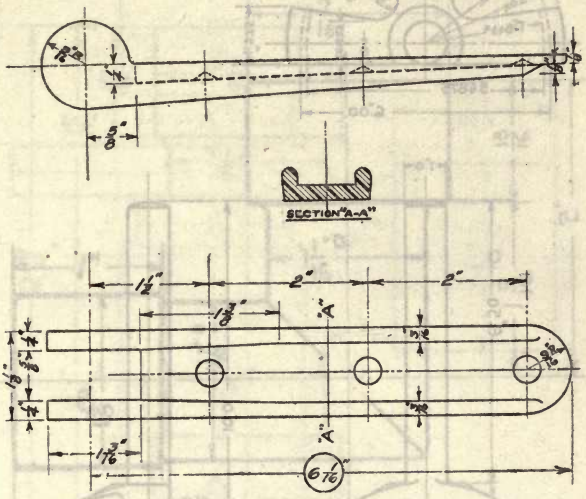

HINGE, FEMALE, 6 1/16″

(For male part of hinge see Die No. 3150-M—*Modified*)

Weight (steel), lbs. **Die number, 3219-M**

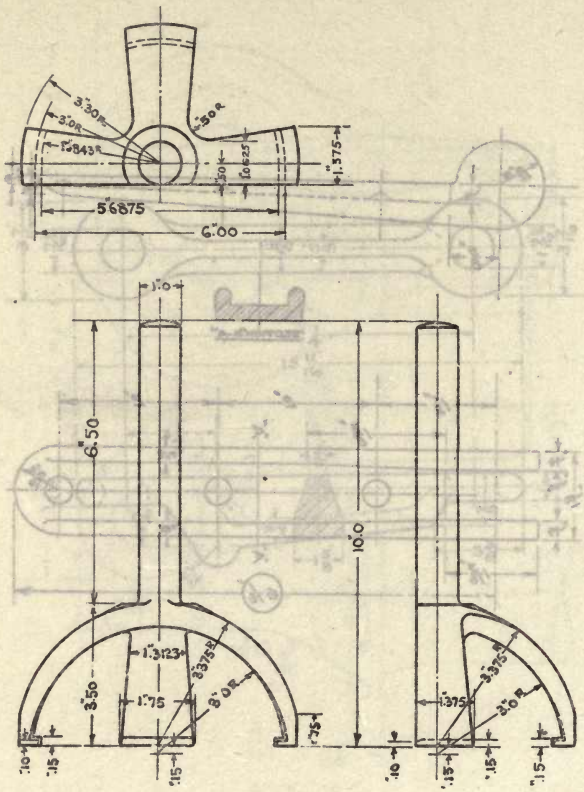

EXTRACTOR, SHELL, 5″

Weight, lbs. **Die number, 3220-Y**

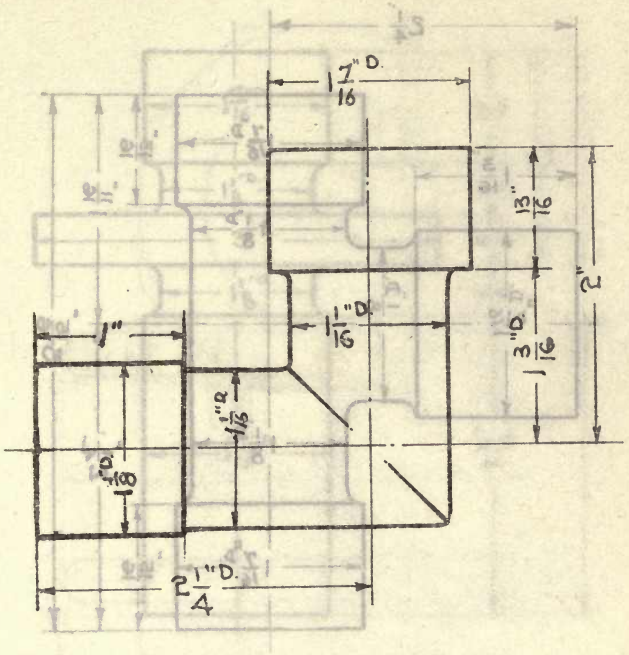

ELBOW

For H. P. Fittings

Weight, lbs. **Die number, 3221-Y**

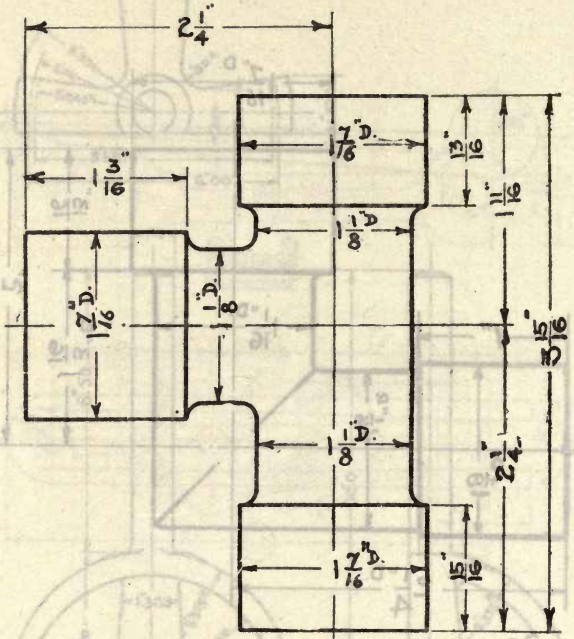

TEE

For H. P. Fittings

Weight, lbs. **Die number, 3222-Y**

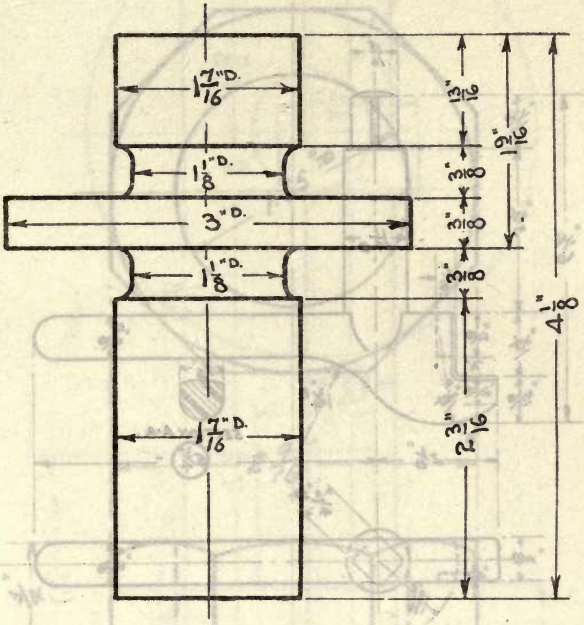

COUPLING, BULKHEAD

For H. P. Fittings

Weight, lbs. **Die number, 3223-Y**

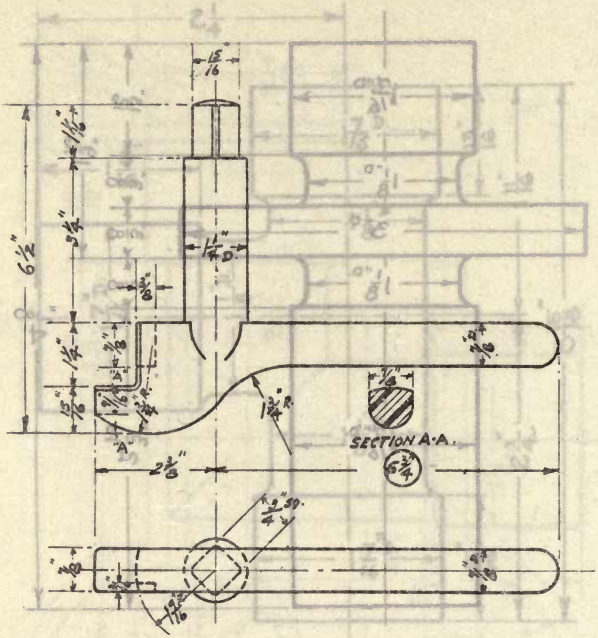

DOG, HANDLED, WITH SPINDLE, 6 3/4″

Weight (steel), lbs. **Die number, 3224-M**

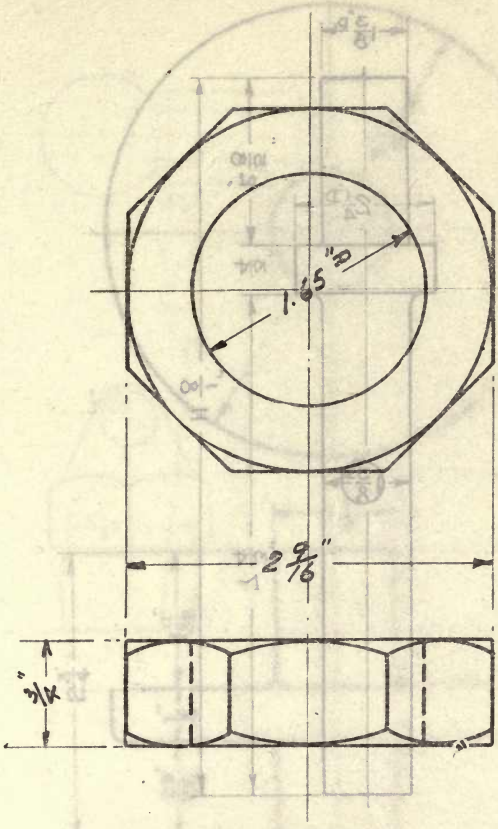

NUT, OCTAGONAL, 1.9″

Weight (steel), lbs. Die number, 3225-M

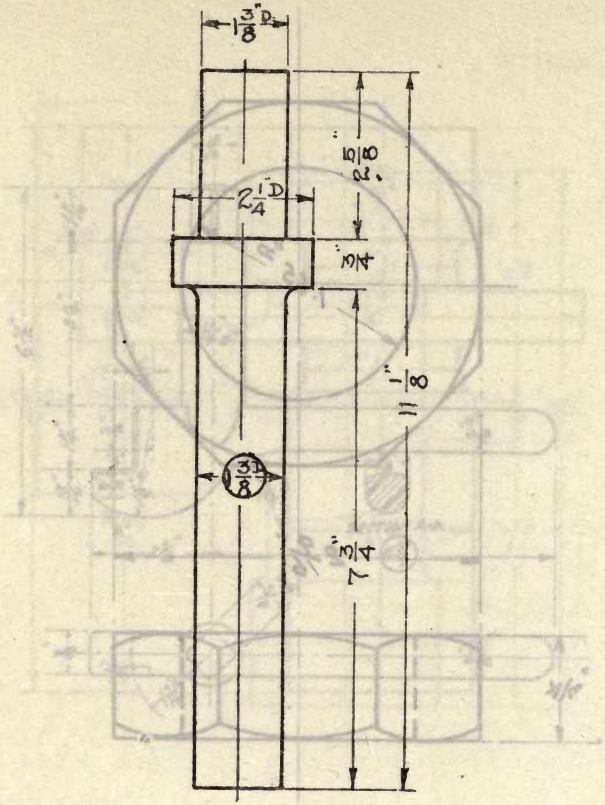

BOLT, 1 3/8″

For boiler

Weight, lbs. **Die number, 3226-Y**
Former die number (1140)

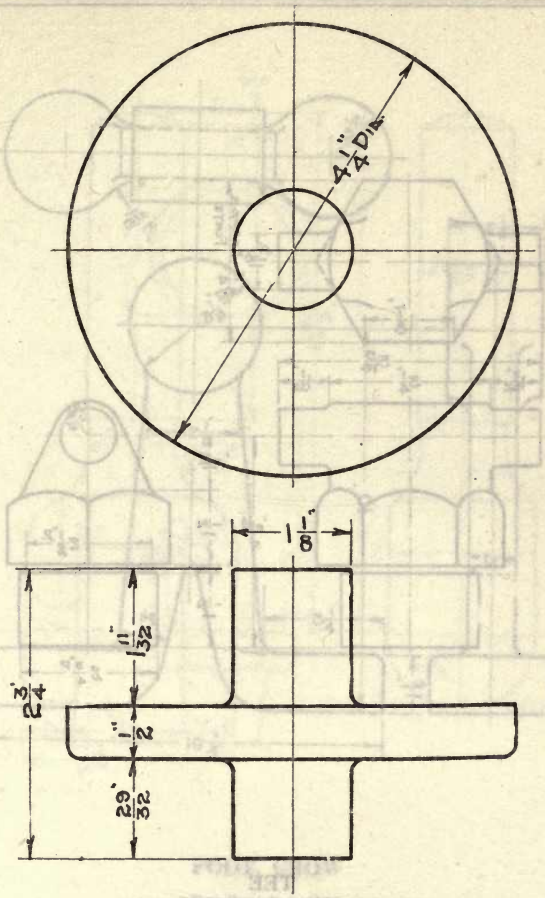

CONNECTION, BULKHEAD

H. P. air fitting

Weight, lbs. **Die number, 3227-Y**
Former die number (1141)

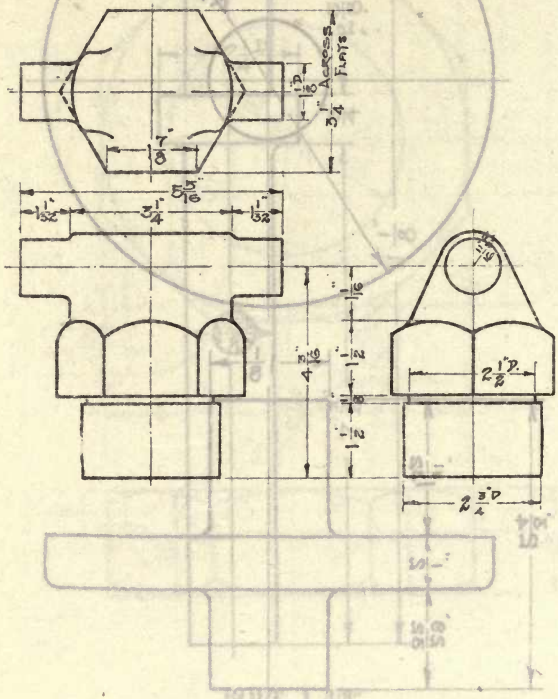

TEE

H. P. air fitting

Weight, lbs. **Die number, 3228-Y**
Former die number (1142)

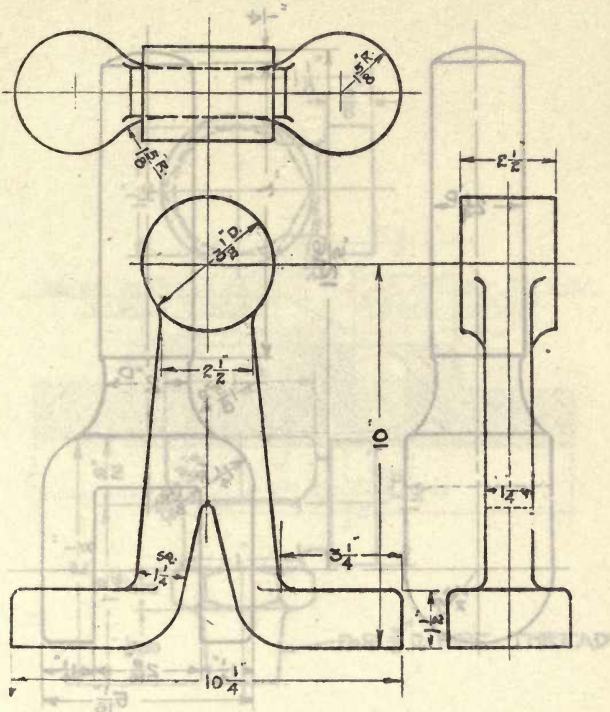

FOOT, CROW

For Scotch boilers

Weight, lbs. Die number, 3229-Y
Former die number (1145)

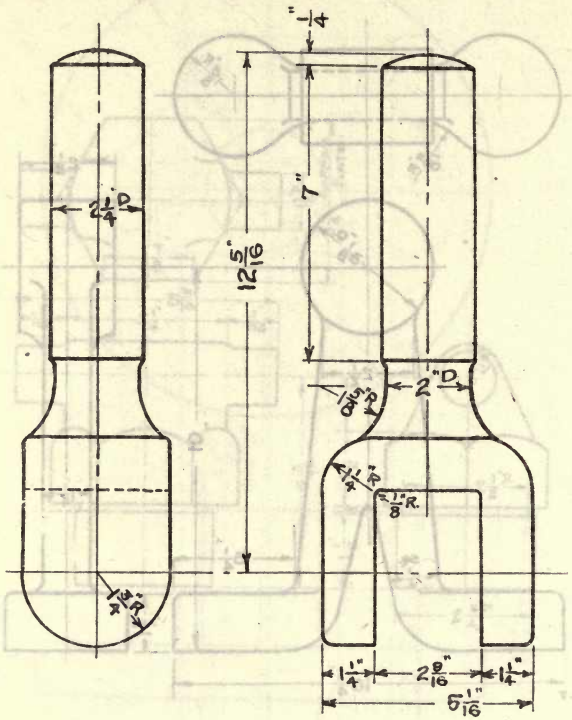

END, JAW

For Scotch boilers

Weight, lbs. **Die number, 3230-Y**
Former die number (1146)

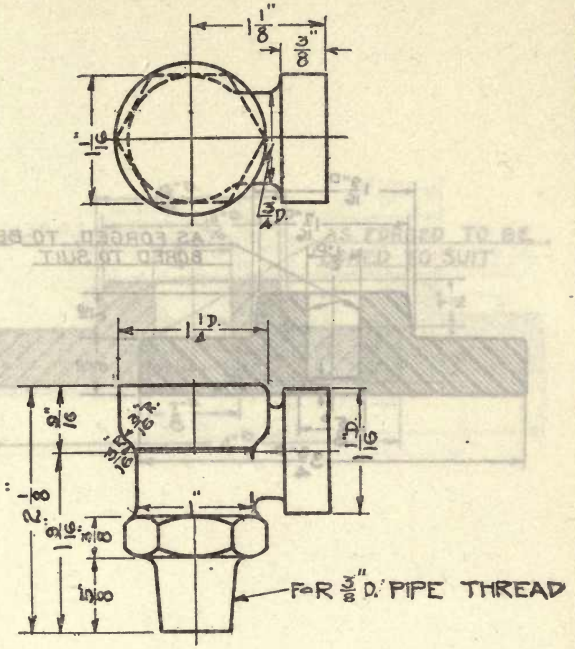

VALVE, ANGLE

Weight, lbs. **Die number, 3231-Y**
Former die number (1147)

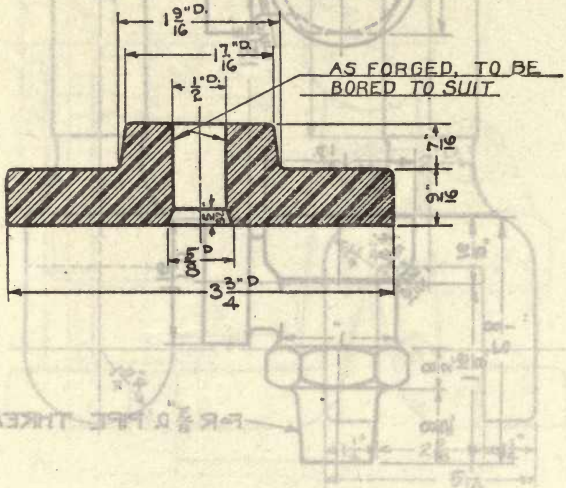

FLANGE, HIGH PRESSURE, 1/2″

Weight, lbs. **Die number, 3232-Y**
Former die number (1149)

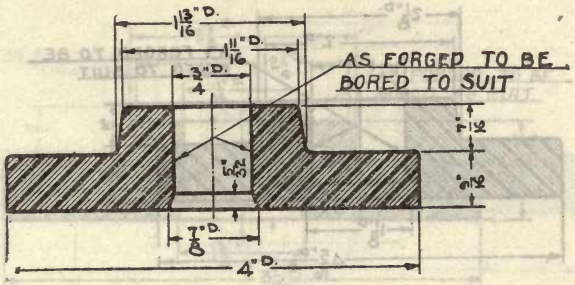

FLANGE, HIGH PRESSURE, 3/4″

Weight, lbs. Die number, 3233-Y
Former die number (1150)

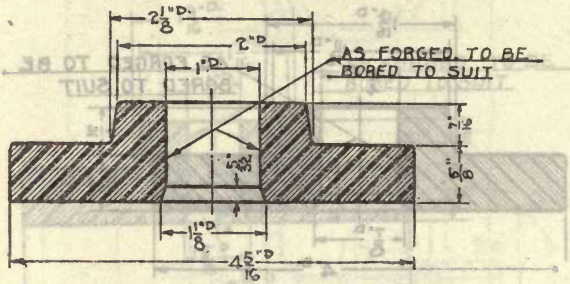

FLANGE, HIGH PRESSURE, 1″

Weight, lbs. Die number, 3234-Y
Former die number (1151)

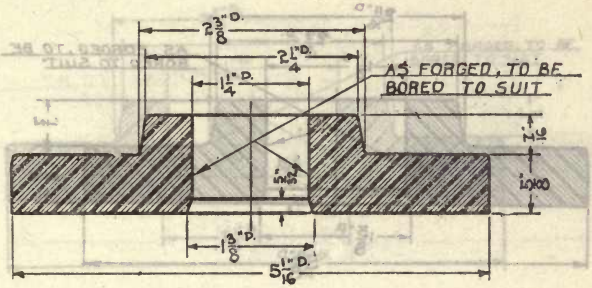

FLANGE, HIGH PRESSURE, 1 1/4″

Weight, lbs.

Die number, 3235-Y
Former die number (1152)

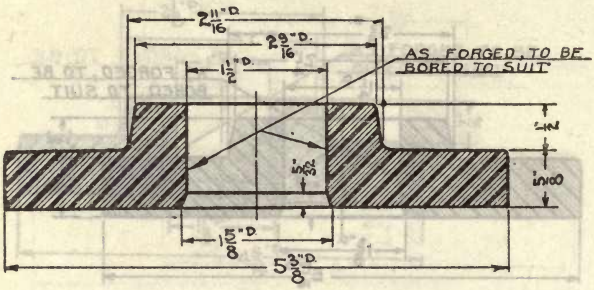

FLANGE, HIGH PRESSURE, 1 1/2″

Weight, lbs. **Die number, 3236-Y**
Former die number (1153)

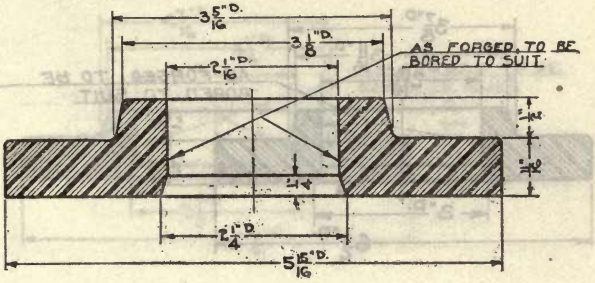

FLANGE, HIGH PRESSURE, 2″

Weight, **lbs.** **Die number, 3237-Y**
Former die number (1154)

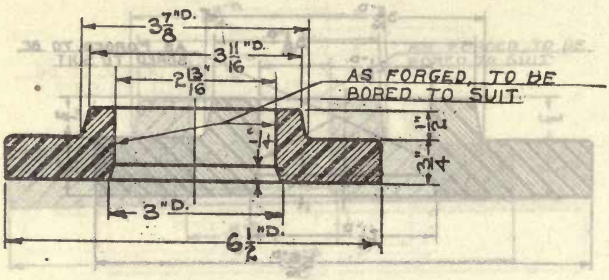

FLANGE, HIGH PRESSURE, 2 1/2″

Weight, lbs. **Die number, 3238-Y**

Former die number (1155)

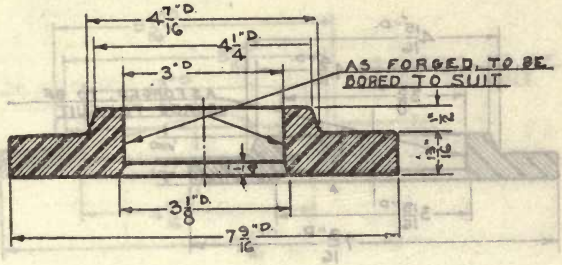

FLANGE, HIGH PRESSURE, 3″

Weight, lbs. **Die number, 3239-Y**
Former die number (1156)

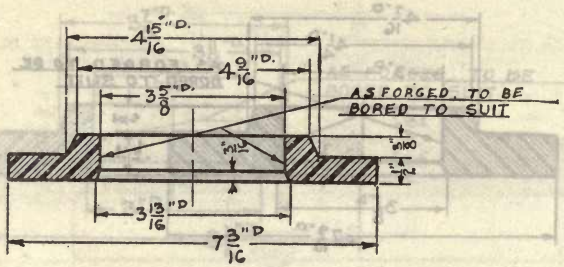

FLANGE, LOW PRESSURE, 3 1/2″

Weight, lbs. **Die number, 3240-Y**
Former die number (1157)

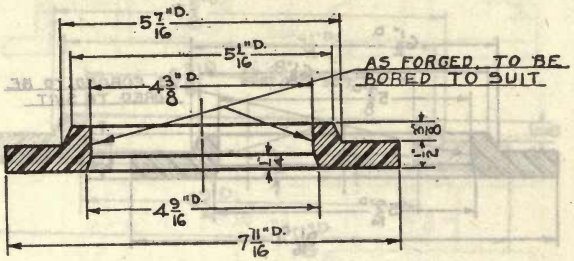

FLANGE, LOW PRESSURE, 4 1/8″

Weight, **lbs.** **Die number, 3241-Y**
Former die number (1158)

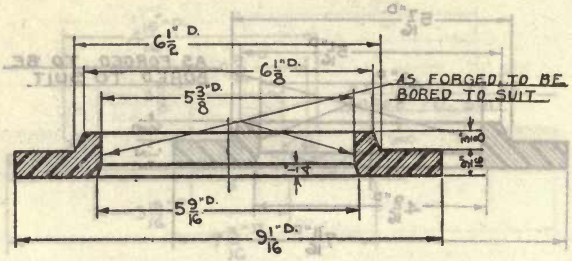

FLANGE, LOW PRESSURE, 5″

Weight, lbs. **Die number, 3242-Y**
Former die number (1160)

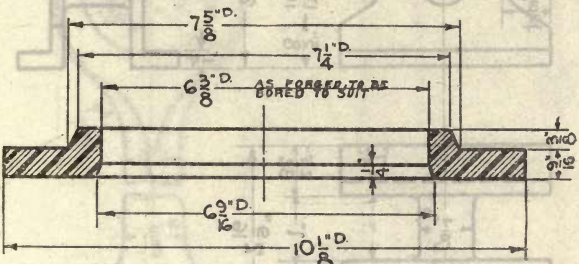

FLANGE, LOW PRESSURE, 6″

Weight, **lbs.** **Die number, 3243-Y**
Former die number (1162)

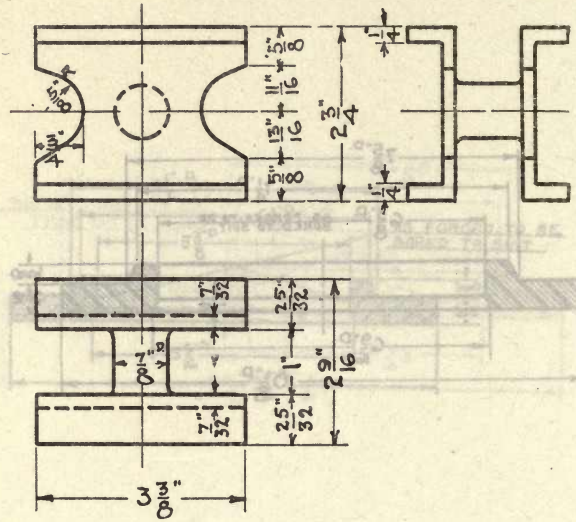

BLOCK, LINK

For 50 ft. cutter engine

Weight, lbs. **Die number, 3244-Y**
Former die number (1169)

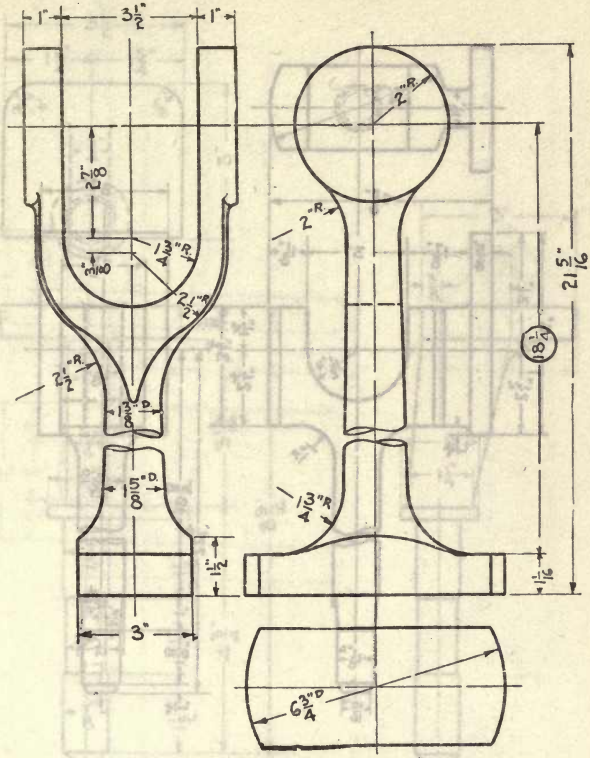

ROD, CONNECTING

For 50 ft. cutter engine

Weight, lbs.

Die number, 3245-Y
Former die number (1172)

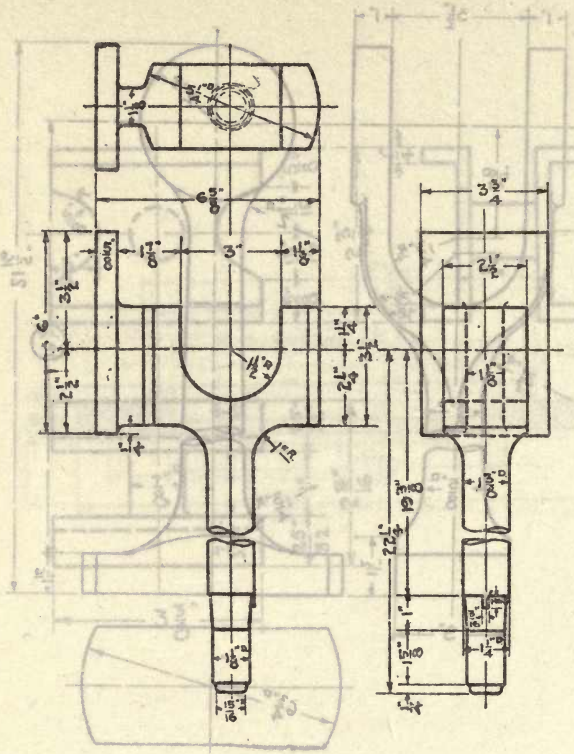

ROD, PISTON, 1 3/8″ D., WITH CROSSHEAD

For 50 ft. cutter engine

Weight, lbs. **Die number, 3246-Y**
Former die number (1173)

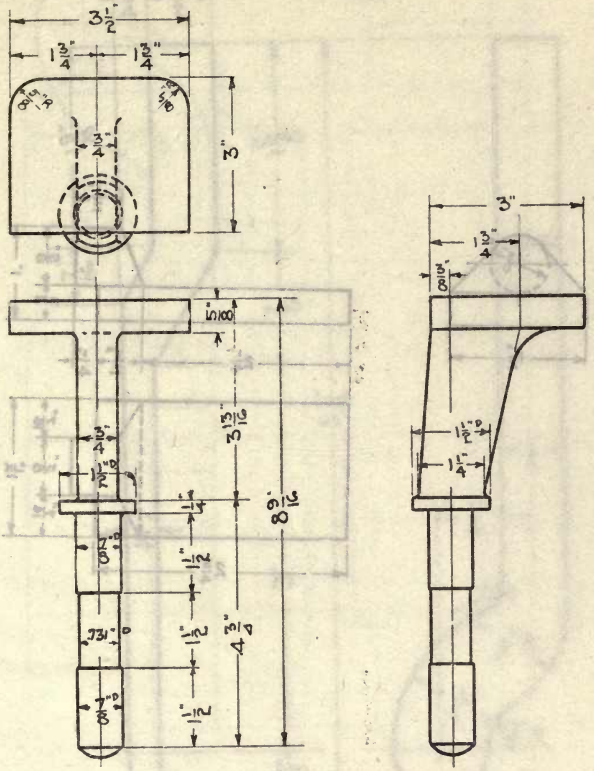

STRUT, BLOCK, THRUST

For 50 ft. cutter engine

Weight, lbs.

Die number, 3247-Y
Former die number (1174)

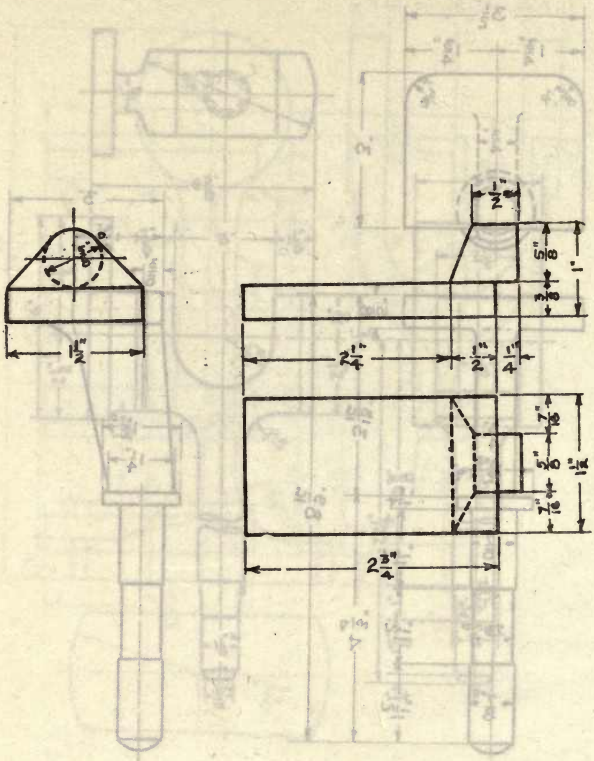

PIN, LOCK

For safe locker in secretary bureau

Weight, lbs. **Die number, 3248-Y**
Former die number (553)

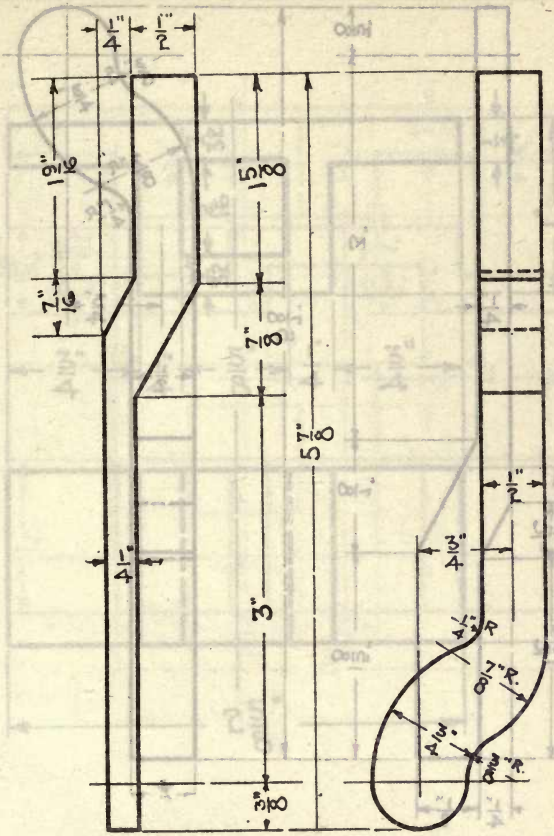

ROD, UPPER

For safe locker in secretary bureau

Weight, lbs.

Die number, 3249-Y
Former die number (554)

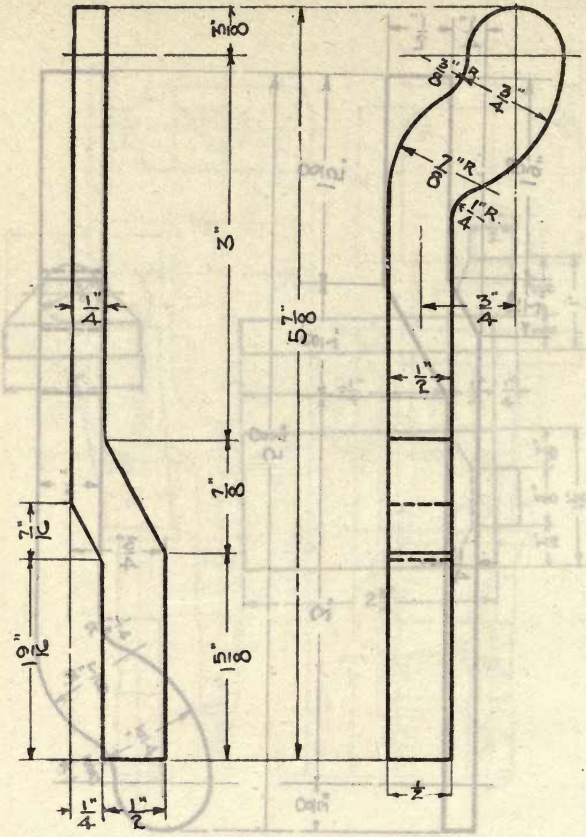

ROD, LOWER

For safe locker in secretary bureau

Weight, **lbs.** **Die number, 3250-Y**
Former die number (554)

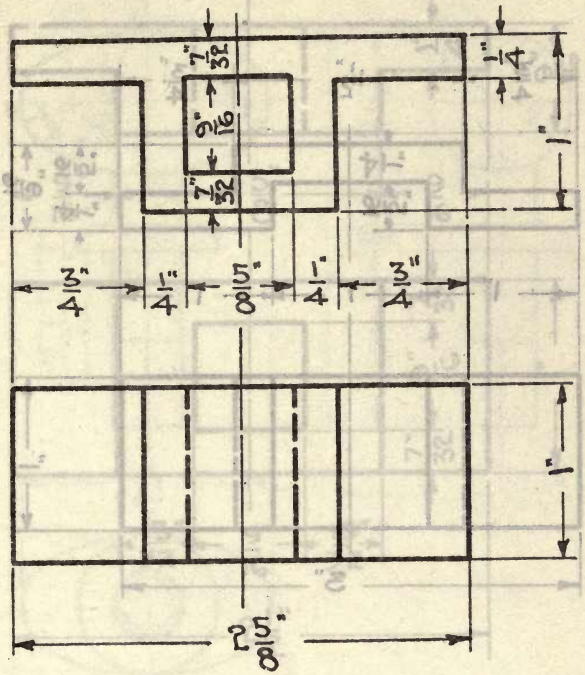

GUIDE, ROD

For safe locker in secretary bureau

Weight, lbs.

Die number, 3251-Y
Former die number (555)

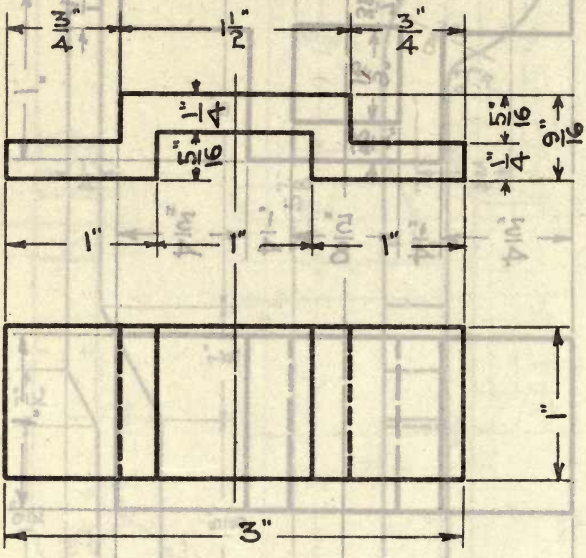

GUIDE, ROD

For safe locker in secretary bureau

Weight, lbs.

Die number, 3252- Y
Former die number (556)

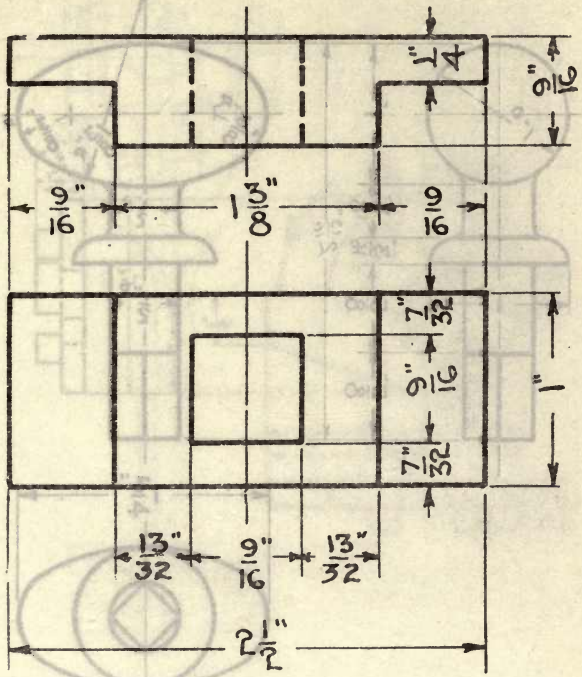

STOP, ROD

For safe locker in secretary bureau

Weight, lbs. **Die number, 3253-Y**
Former die number (557)

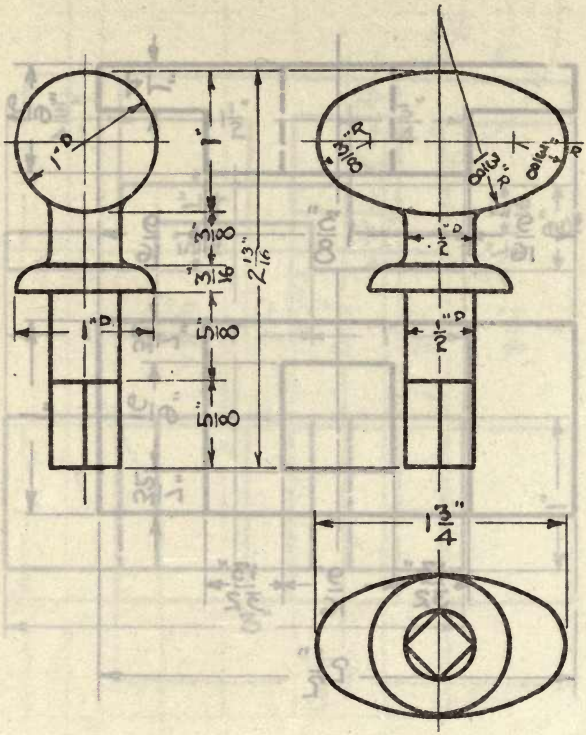

KNOB, DOOR

For safe locker in secretary bureau

Weight, lbs.

Die number, 3254-Y
Former die number (558)

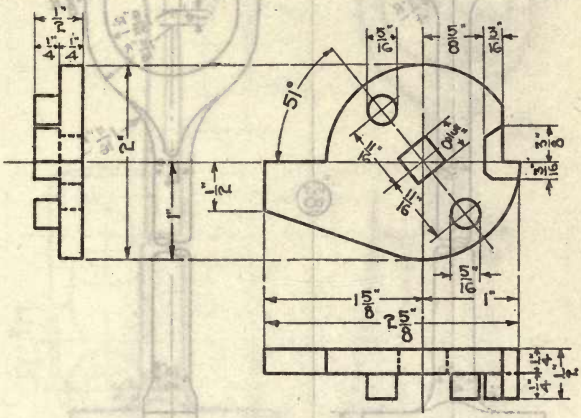

DISC

For safe locker in secretary bureau

Weight, lbs. **Die number, 3255-Y**
Former die number (559)

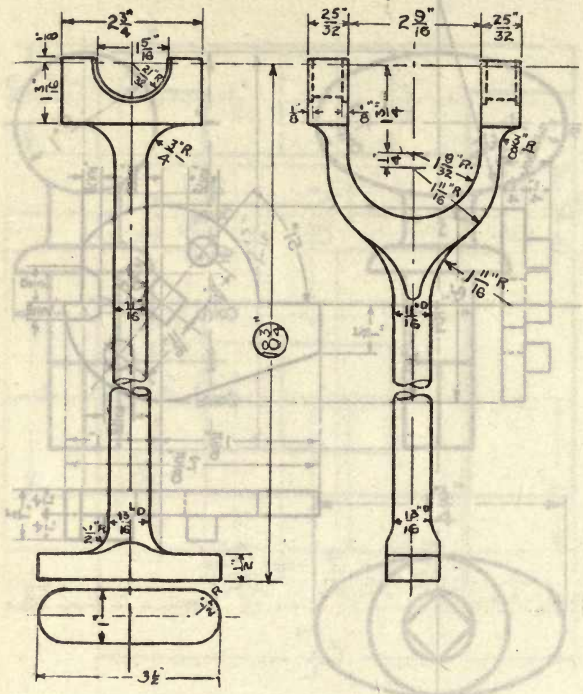
2 3/4"
1 1/8"
3/16
1/8"
25/32
2 9/16
25/32
1/8"
1/8"
1/8"

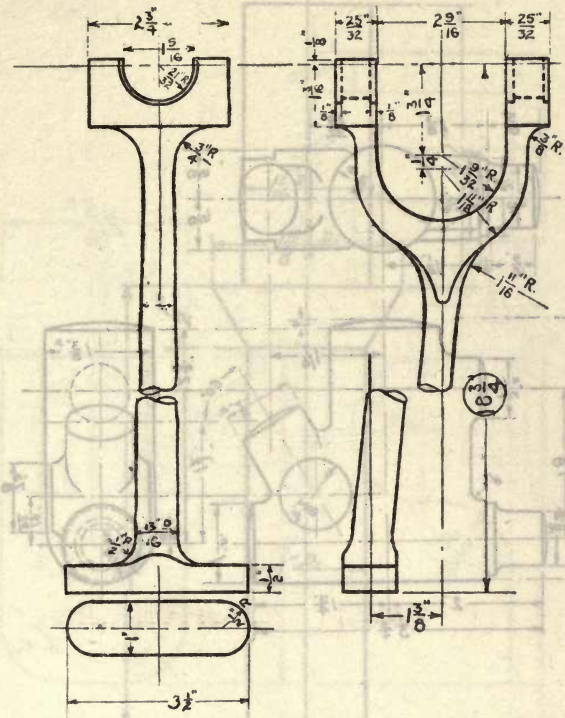

ROD, ECCENTRIC, ASTERN

For 50 ft. cutter engine

Weight, **lbs.** **Die number, 3257-Y**
Former die number (1171)

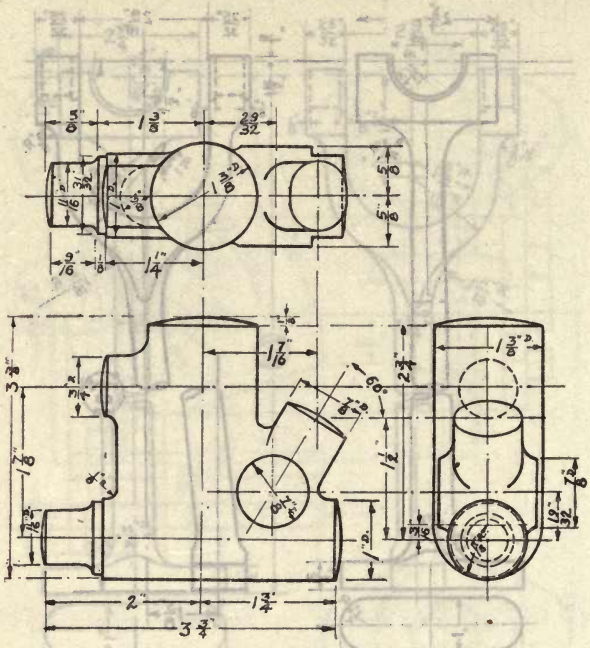

BODY, SPRAY VALVE, FUEL CHECK, 1/2″

For main engines of "O" and "S" type submarines

Weight, **lbs.** **Die number, 3258-Y**

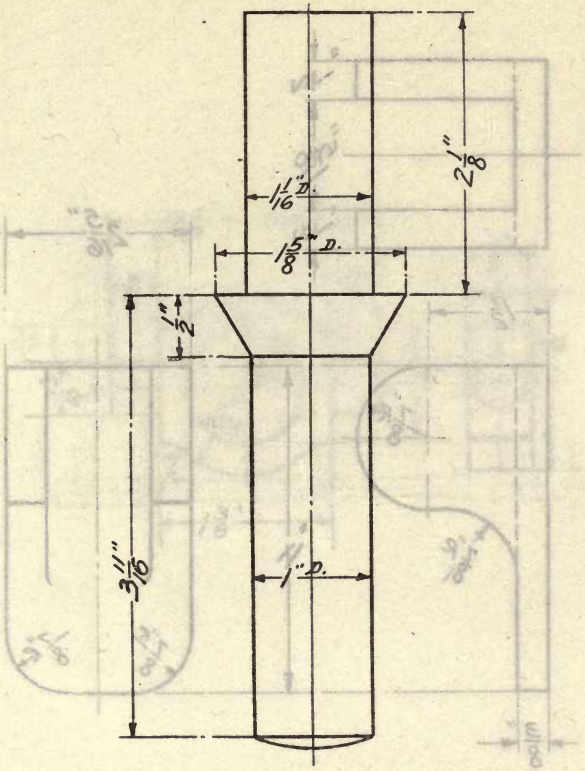

BOLT

For handhold plate, B. & W. boiler

Weight, lbs. **Die number, 3259-X**

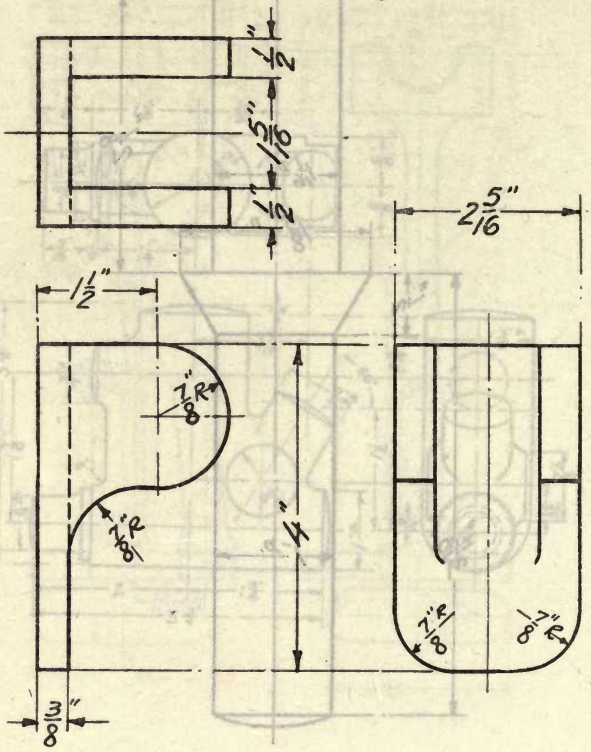

PAD, LADDER

Weight, lbs. **Die number, 3260-Y.**

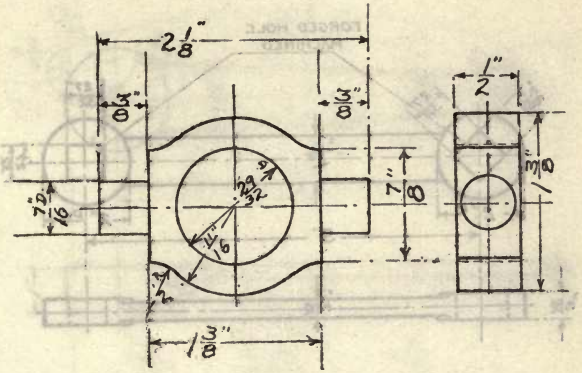

COLLAR, CLAMP

For flexible fuel oil pipe to burners

Weight, **lbs.** **Die number, 3261-Y**
Former die number (1184)

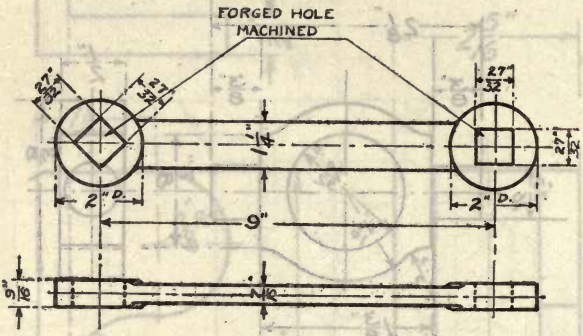

WRENCH, ELEVATING GEAR, 12″

For interconnecting clutch

Weight, lbs. **Die number, 3262-Y**

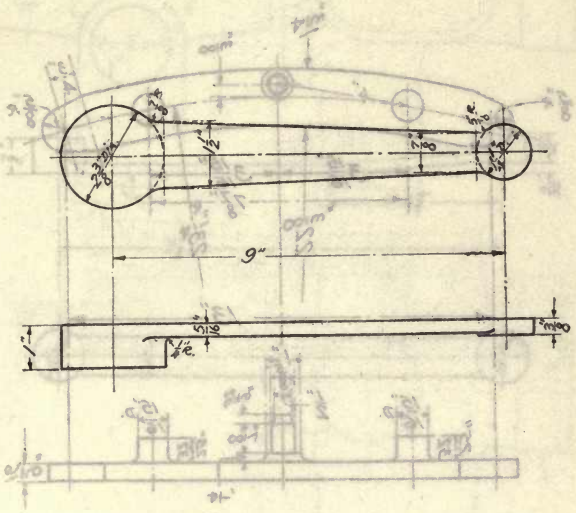

ARM, REVERSING

For steamer engine, type "W-1"

Weight, lbs. **Die number, 3263-Y**

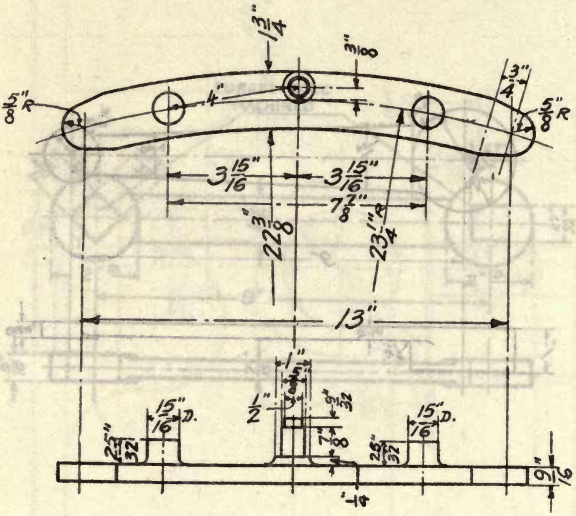

BAR, LINK

For steamer engine, type "W-1"

Weight, lbs. **Die number, 3264-Y**

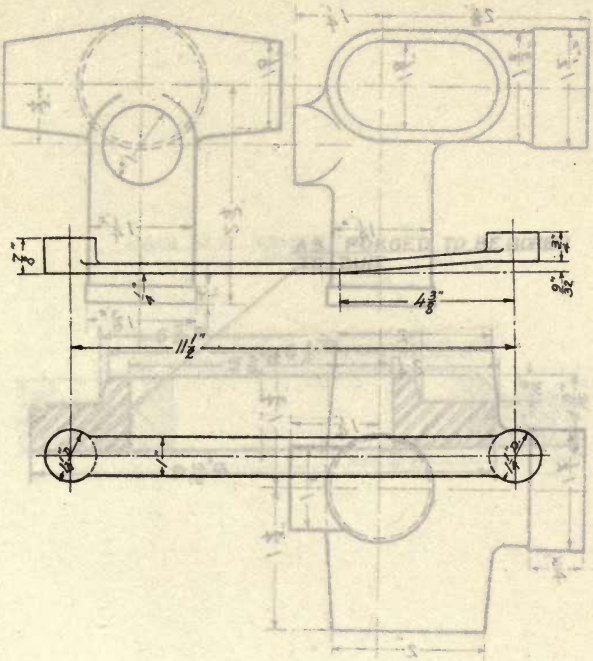

ROD, SUSPENSION

For steamer engine, type "W-1"

Weight, lbs. **Die number, 3265-Y**

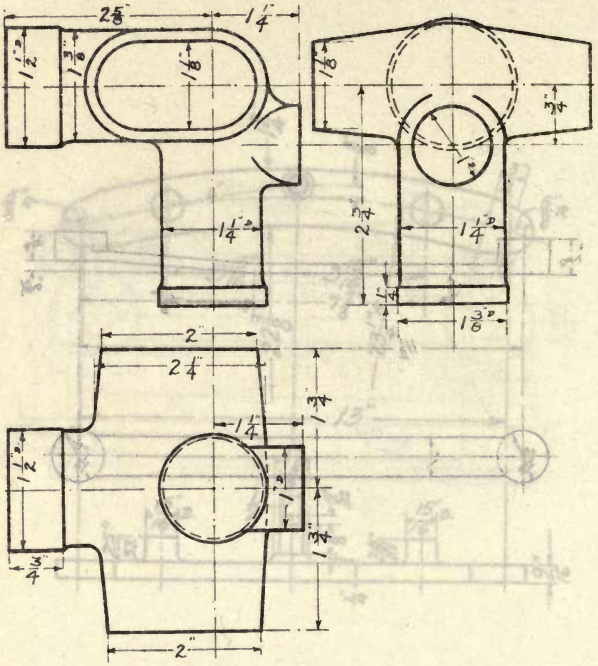

VALVE, BY-PASS, 1/2″

For high-pressure air line

Right and left hand valves made from same die

Weight, lbs. **Die number, 3266-Y**

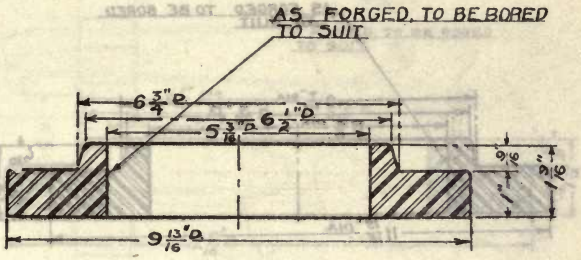

FLANGE, HIGH-PRESSURE, 5″

Weight, lbs. **Die number, 3267-Y**

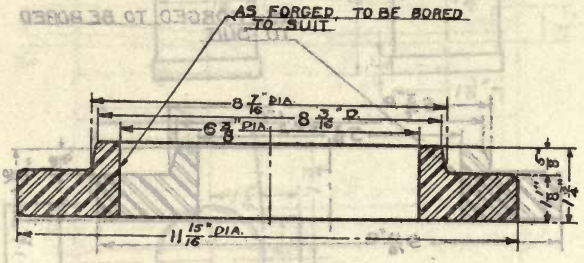

FLANGE, HIGH-PRESSURE, 6 1/2″

Weight, lbs. **Die number, 3268-Y**

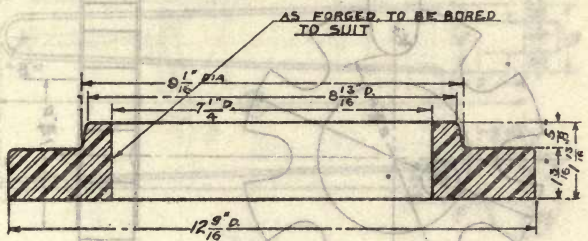

FLANGE, HIGH-PRESSURE, 7″

Weight, lbs. **Die number, 3269-Y**

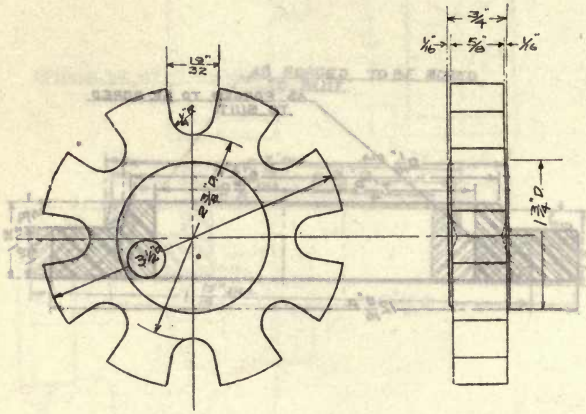

KEY, SPRING, 3 1/2"

Weight (steel), lbs. Die number, 3270-M

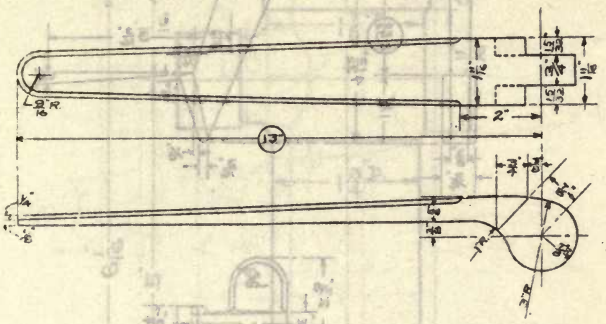

HINGE, MALE, 13″

Weight (steel), lbs. **Die number, 3271-M**

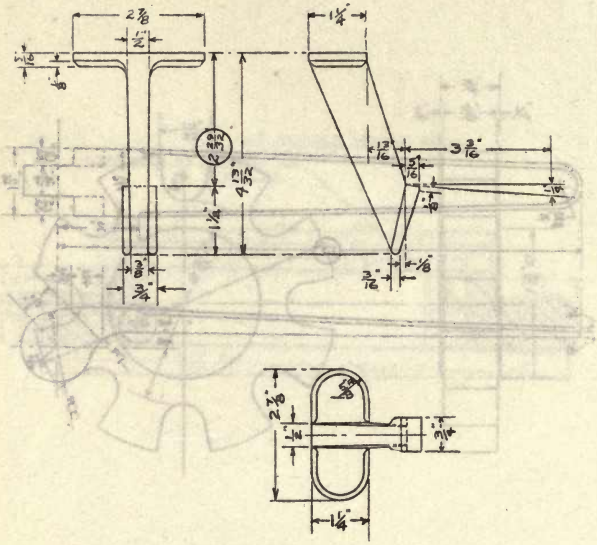

HOOK, LATCH, 2 29/32″

Weight (steel), lbs. **Die number, 3272-M**

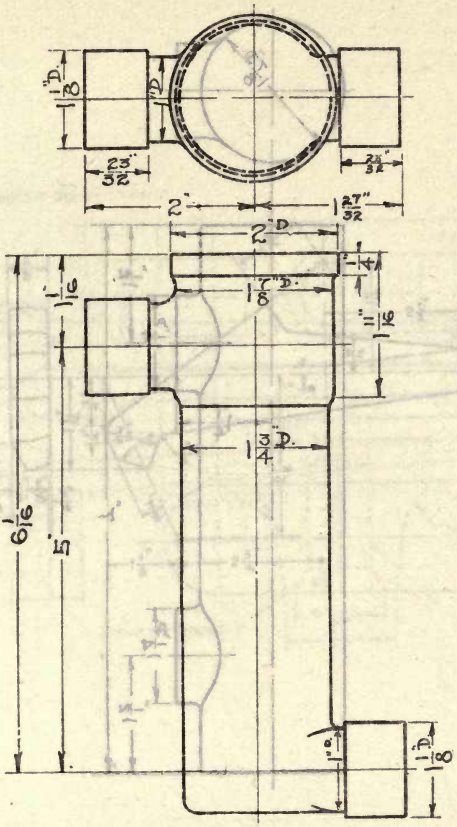

STRAINER

For high-pressure fittings

Weight, lbs. **Die number, 3273-Y**
Former die number (1143)

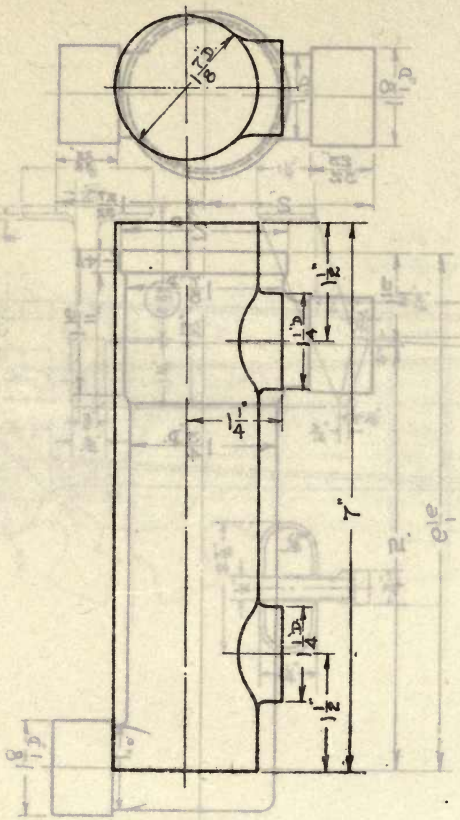

CONNECTION PIECE

For fuel-oil pipe

Weight, lbs. **Die number, 3274-Y**
Former die number (1148)

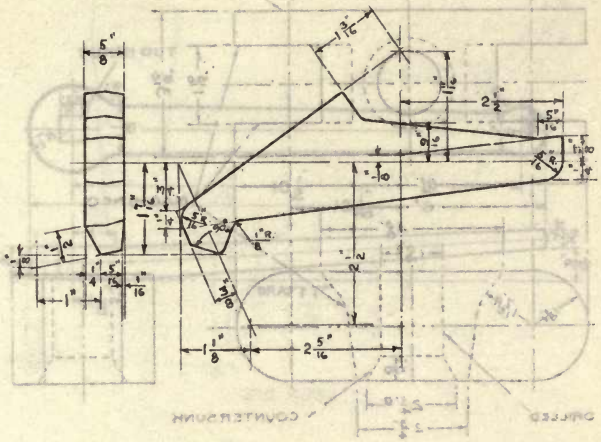

CATCH, GEAR, TRAINING

For fire-control equipment

Weight, **Die number, 3275-Y**

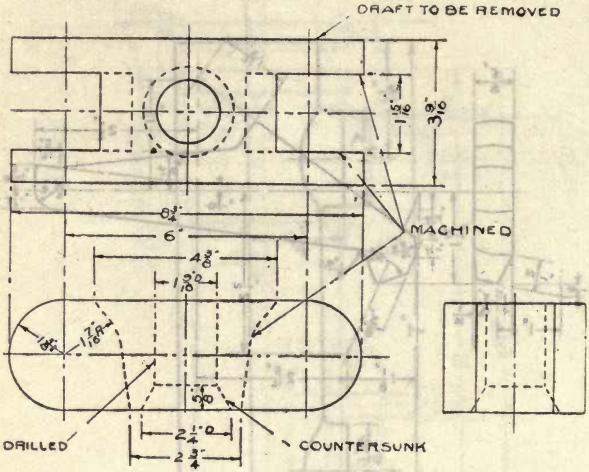

CROSSHEAD, BLOCK, METAL, SNATCH, 20″

Weight (steel), **Die number, 3276-Y**

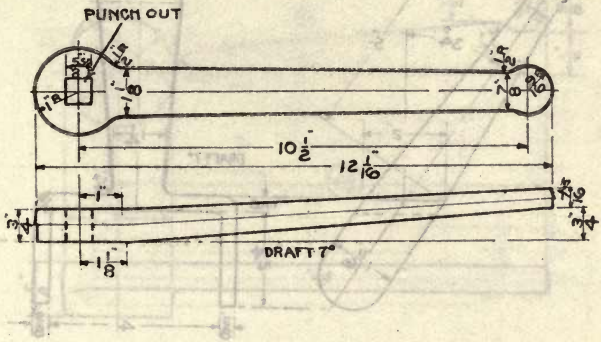

TILLER

For 21-ft. motor dory

Weight (steel), **lbs.** **Die number, 3277-B**

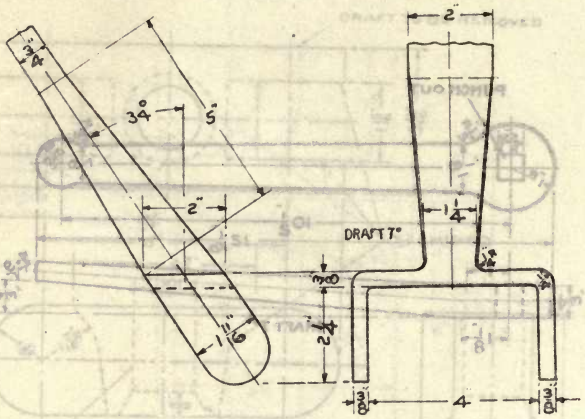

OPEN DIE

HANGER, AFTER

For 21-ft. motor dory

Weight (steel), lbs. **Die number, 3278-B**

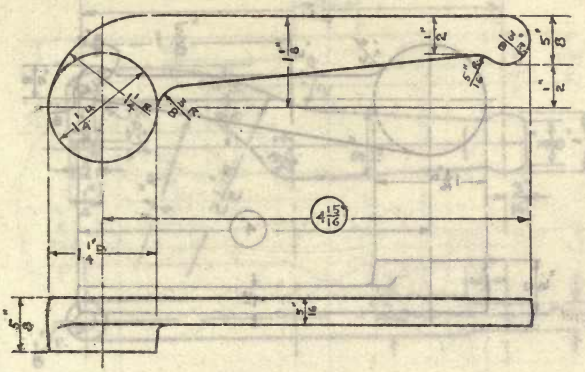

LEVER, GEAR, CLUTCH, 4 15/16″

For fire-control equipment

Weight, **Die number, 3279-Y**

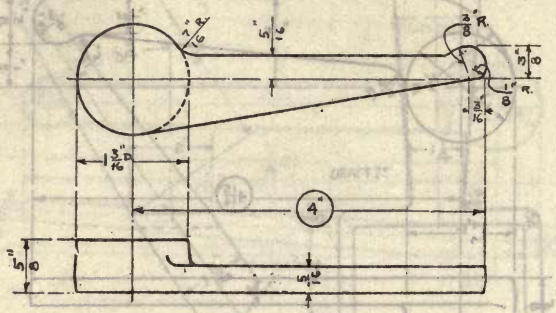

LEVER, GEAR, CLUTCH, 4″

For fire-control equipment

Weight, **Die number, 3280-Y**

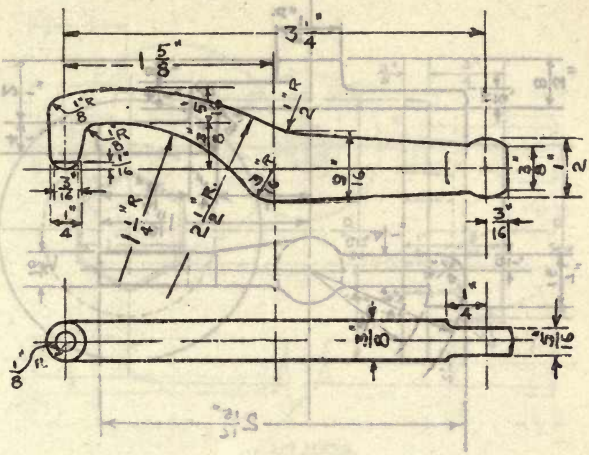

LEVER

For fire-control equipment

Weight, **Die number, 3281-Y**

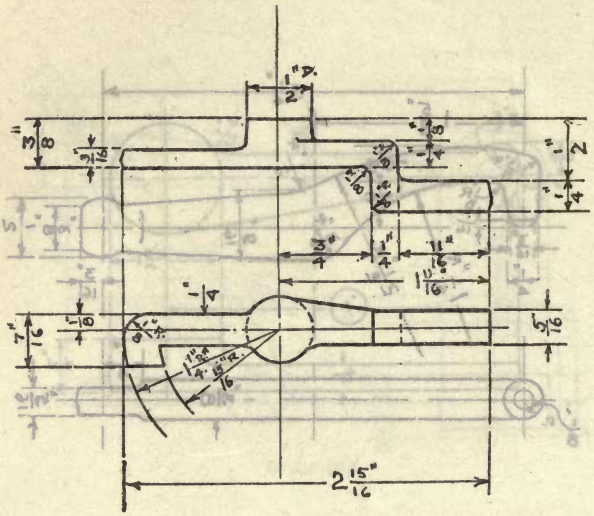

LEVER, STOP

For fire-control equipment

Weight, **Die number, 3282-Y**

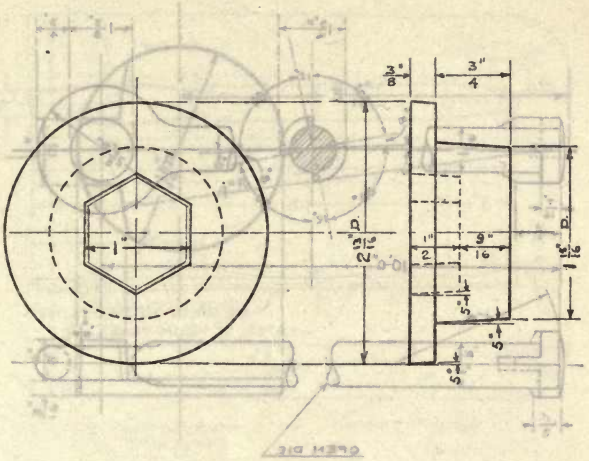

NUT

For fire-control equipment

Weight, **Die number, 3283-Y**

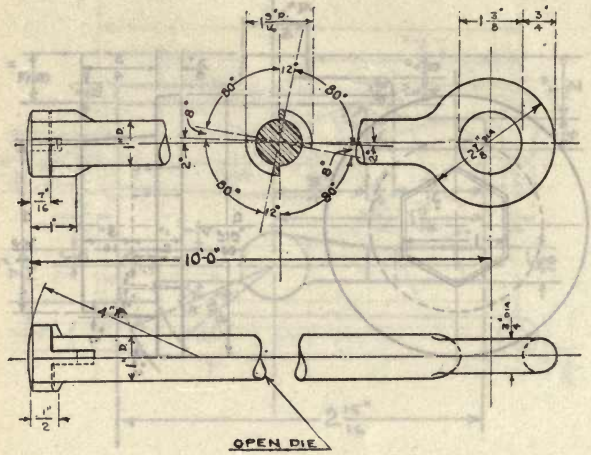

EXTRACTOR, SHELL, 14″

Weight, **Die number, 3284-Y**

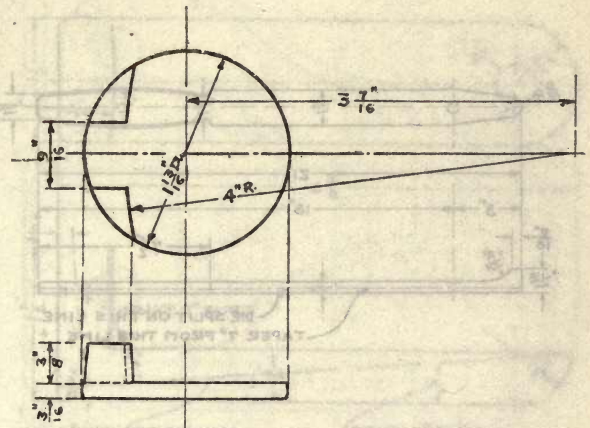

STOP, TRAINING

For fire-control equipment

Weight, **Die number, 3285-Y**

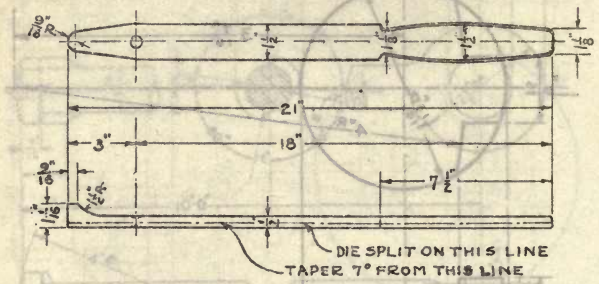

LEVER, JACKING

For gasoline engines

Weight (steel), **lbs.** **Die number, 3286-N**

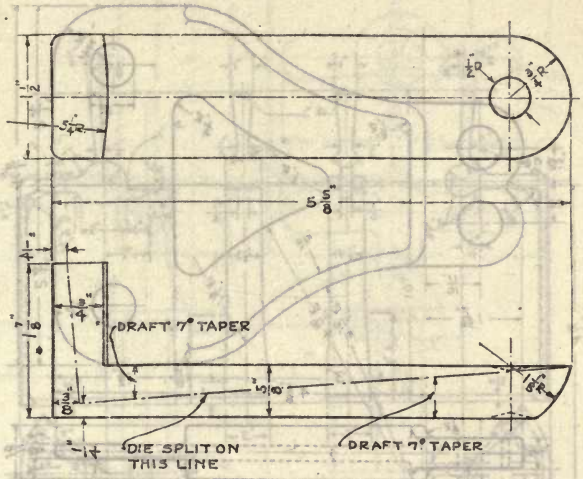

JAW, JACKING LEVER

For gasoline engines

Weight (steel), lbs. **Die number, 3287-N**

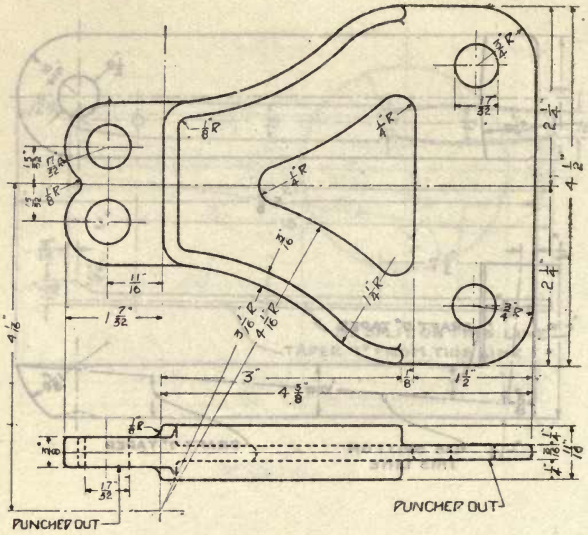

FITTING, STOWAGE, AMMUNITION

Weight (steel), 2.25 lbs. **Die number, 3288-NM**

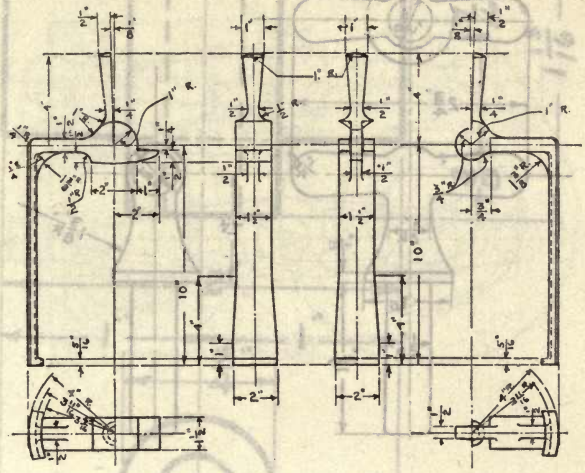

EXTRACTOR, SHELLS, 5″

Weight, **Die number, 3289-Y**

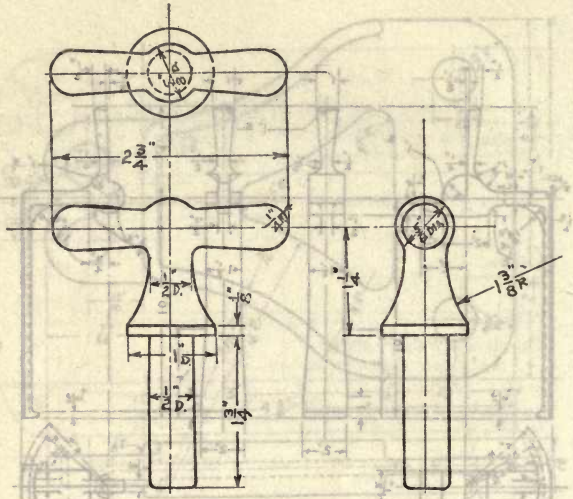

HANDLE, DAMPER

For vent outlets

Weight (steel), **lbs.** **Die number, 3290-B**

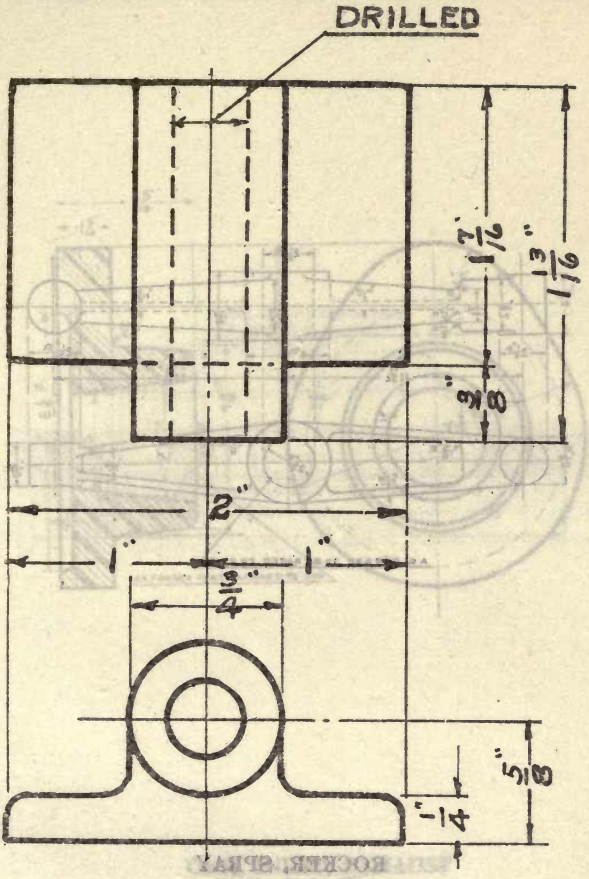

PAD, HINGE

For gas engine cover

Weight, **Die number, 3291-N**

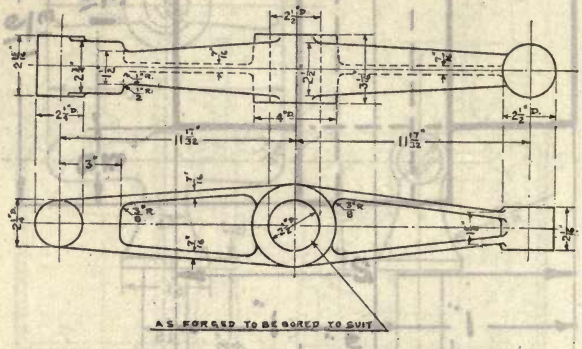

ROCKER, SPRAY

For submarine engines, class "S"

Weight, **lbs.** **Die number, 3292-Y**

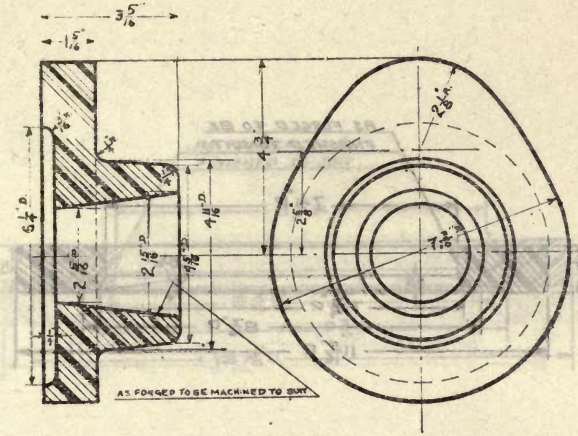

CAM, INLET, EXHAUST

For submarine engines, class "S"

Weight, **Die number, 3293-Y**

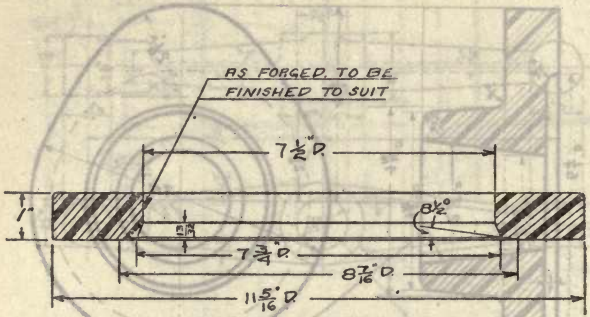

FLANGE, HOLLOW-HEEL, PLAIN 7″

Weight (steel), **lbs.** **Die number, 3294-M**

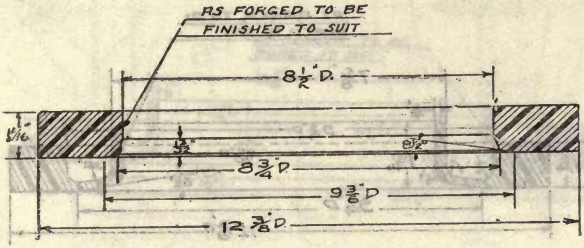

FLANGE, HOLLOW-HEEL, PLAIN 8″

Weight (steel), lbs. Die number, 3295-M

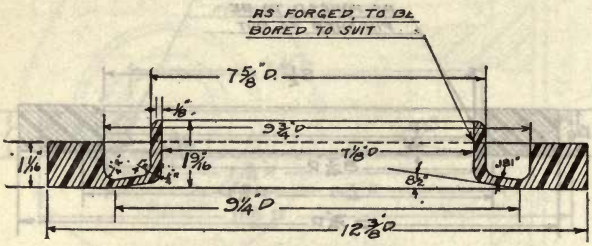

FLANGE, FLEXIBLE, 7″

Weight (steel), lbs. **Die number, 3296-M**

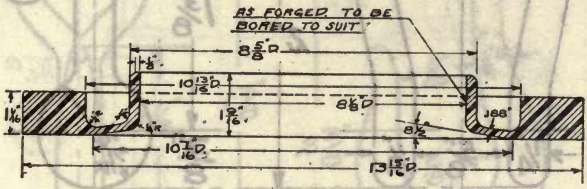

FLANGE, FLEXIBLE, 8″

Weight (steel), lbs. Die number, 3297-M

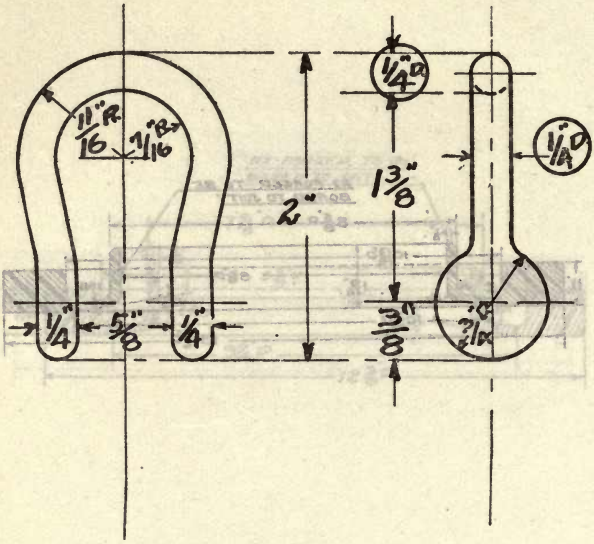

SHACKLE, REGULAR, 1/4″

Weight (steel), **lbs.** **Die number, 3298-M**

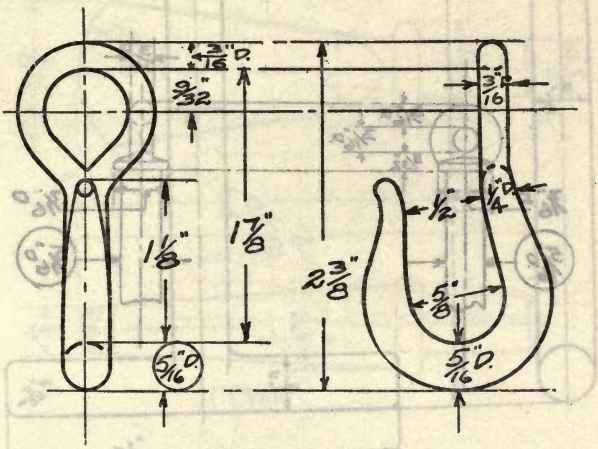

HOOK, SINGLE, SIDE, 5/16″

Weight (steel), **lbs.** **Die number, 3299-M**

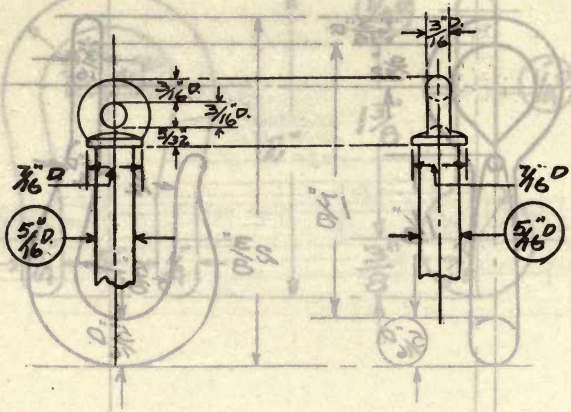

BOLT, EYE, COLLAR, 5/16″

Eye, 3/16 Length, open die

Weight (steel), lbs. Die number, 3300-M

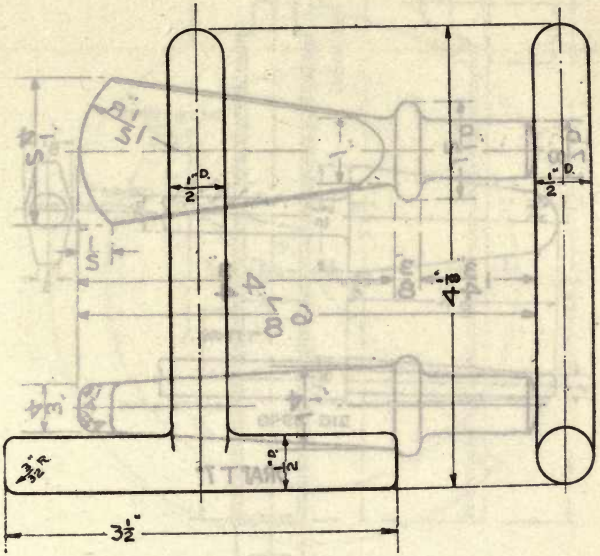

HANDLE, DAMPER

For ventilation terminals

Weight, **lbs.** **Die number, 3301-Y**

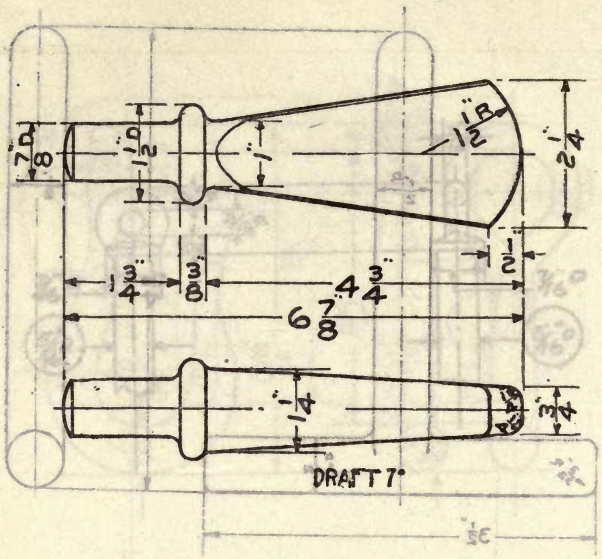

BEARING, RUDDER

For 21-ft. motor dory

Weight (steel), **lbs.** **Die number, 3302-B**

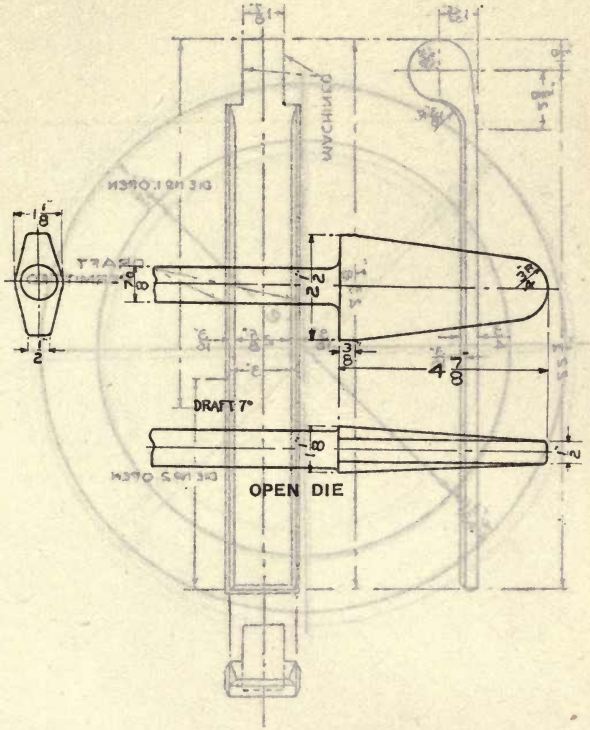

POST, RUDDER

For 21-ft. motor dory

Weight (steel), lbs. **Die number, 3303-B**

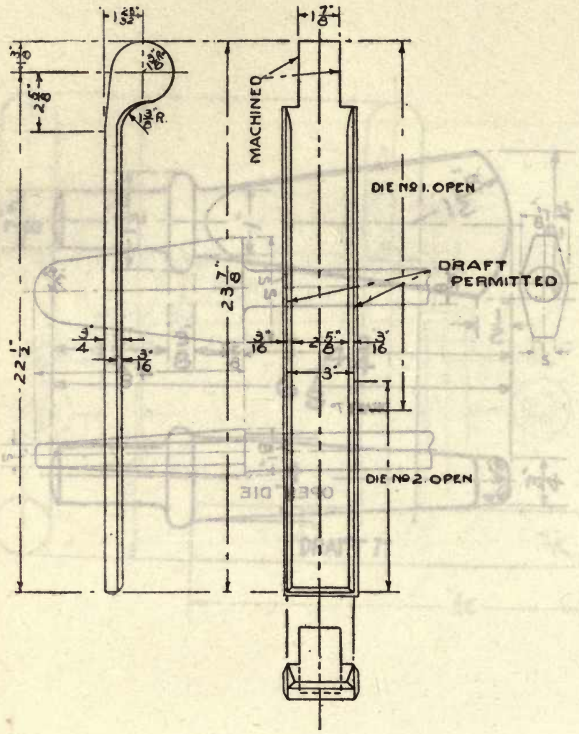

STRAP, BLOCK, METAL, SNATCH, 20″

Weight (steel), lbs. **Die number, 8304-Y**

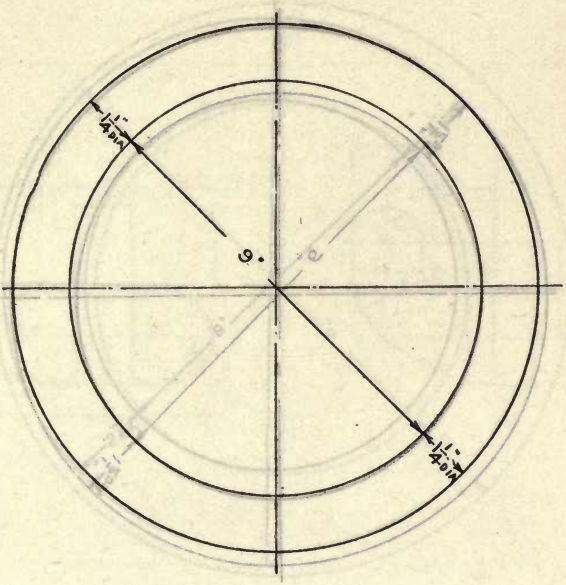

RINGS, 9″ X 1 1/4″

For boat slings

Weight (steel), lbs. **Die number, 3305-B**

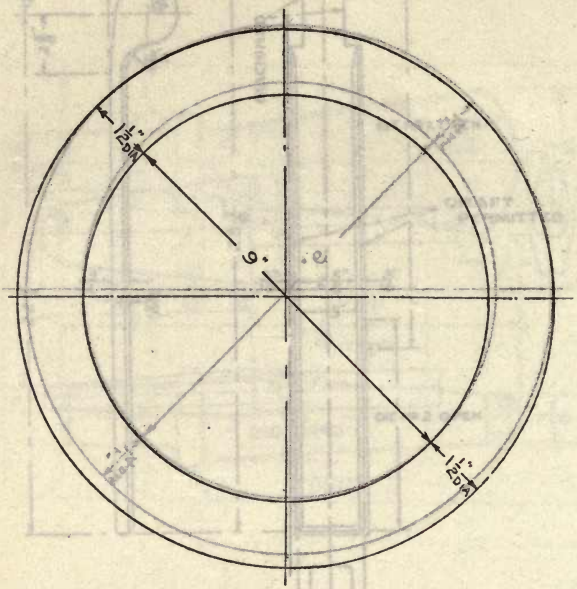

RINGS, 9" X 1 1/2"

For boat slings

Weight (steel), lbs. **Die number, 3306-B**

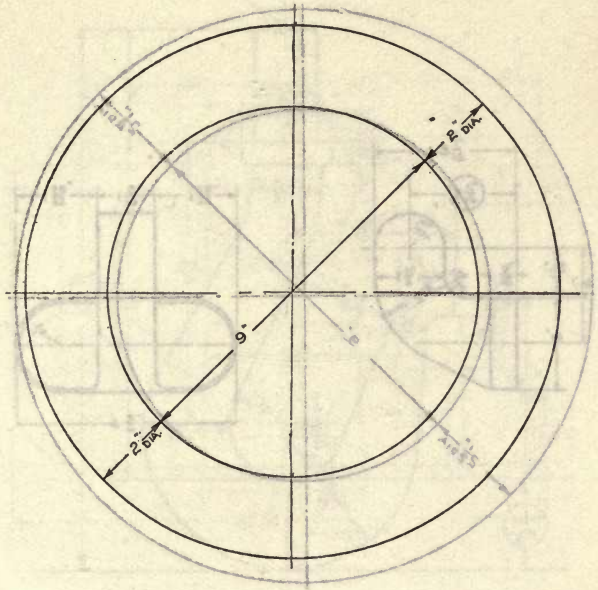

RINGS, 9″ X 2″

For boat slings

Weight (steel), lbs. **Die number, 3307-B**

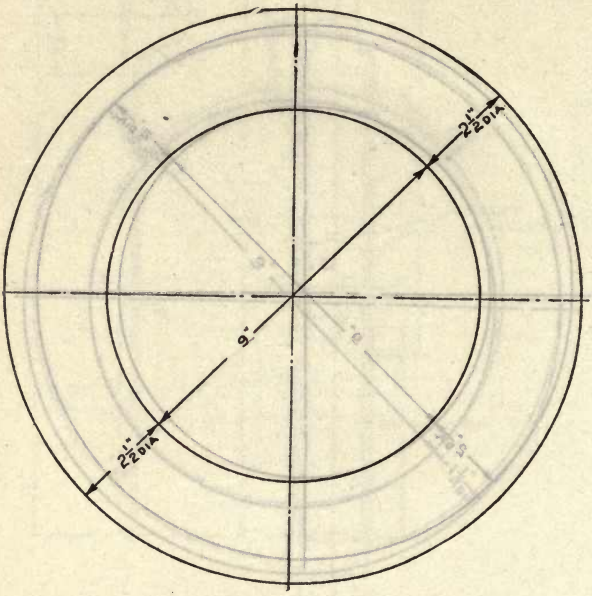

RINGS, 9″ X 2 1/2″

For boat slings

Weight (steel), lbs. **Die number, 3308-B**

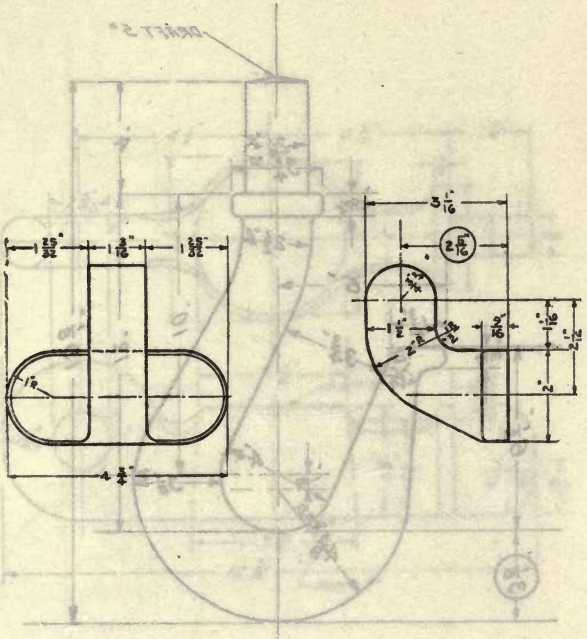

HINGE PAD, MALE, 2 5/16″

Size of pad, 4 3/4″ x 2″ x 9/16″

(For female part see die number 1380)

Weight, lbs. **Die number, 3309-Y**

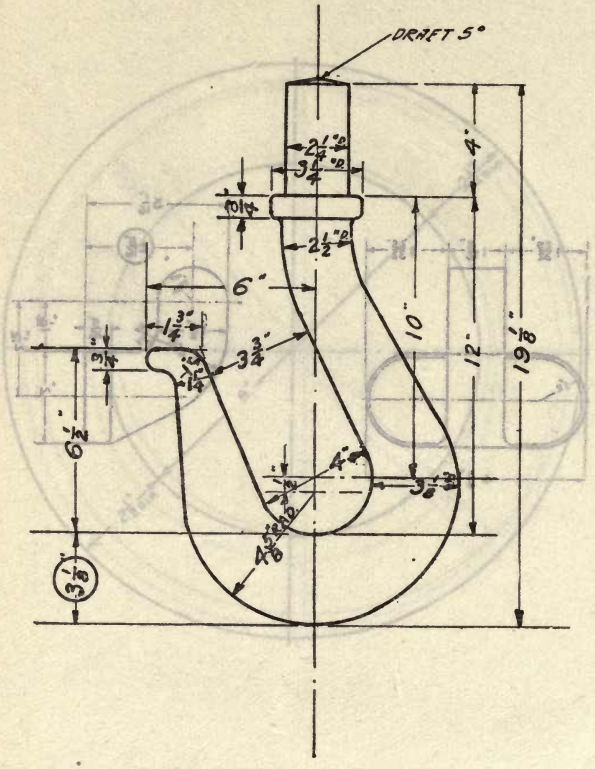

HOOK, SWIVEL, 3 1/8″

Weight, **Die number, 3310-M**

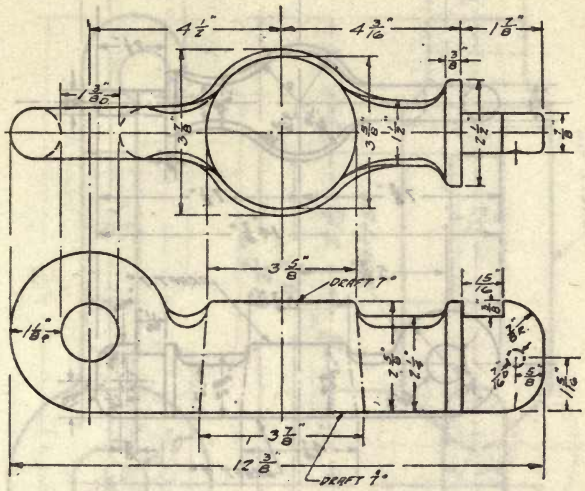

CROSSHEAD, BLOCK, WOOD, SNATCH, 15″

Weight, lbs. **Die number, 3311-M**

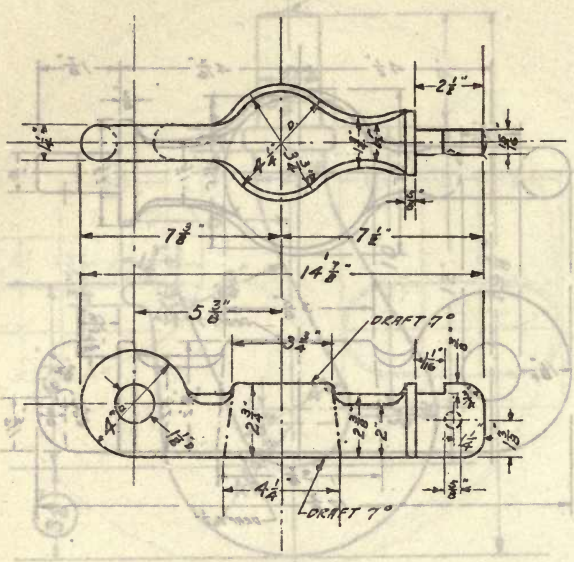

CROSSHEAD, BLOCK, WOOD, SNATCH, 20″

Weight, lbs. **Die number, 3312-M**

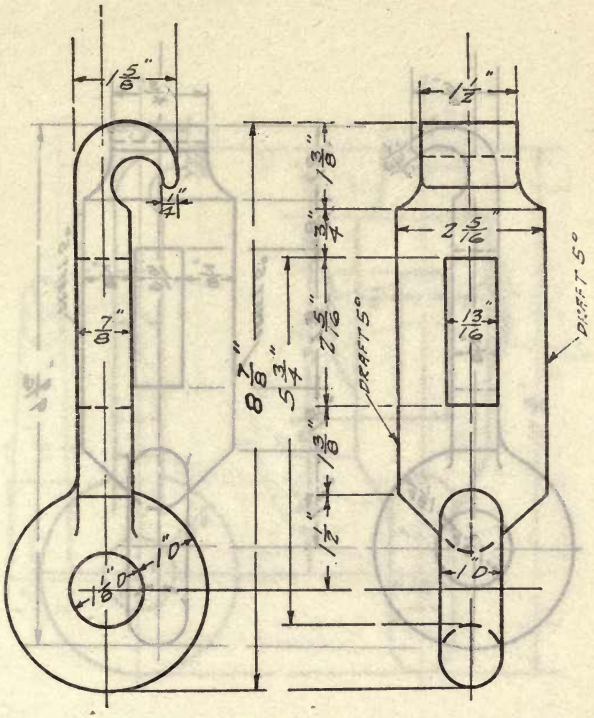

HASP, BLOCK, WOOD, SNATCH, 14"

Weight, **Die number, 3313-M**

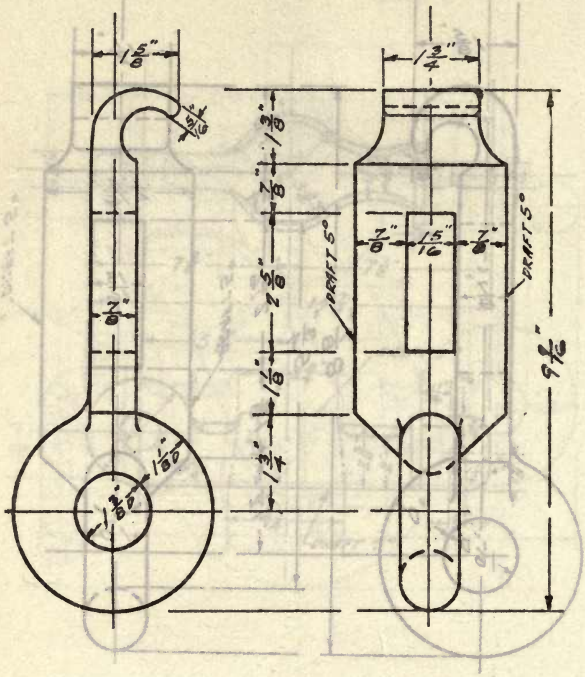

HASP, BLOCK, WOOD, SNATCH, 15″

Weight, **Die number, 3314-M**

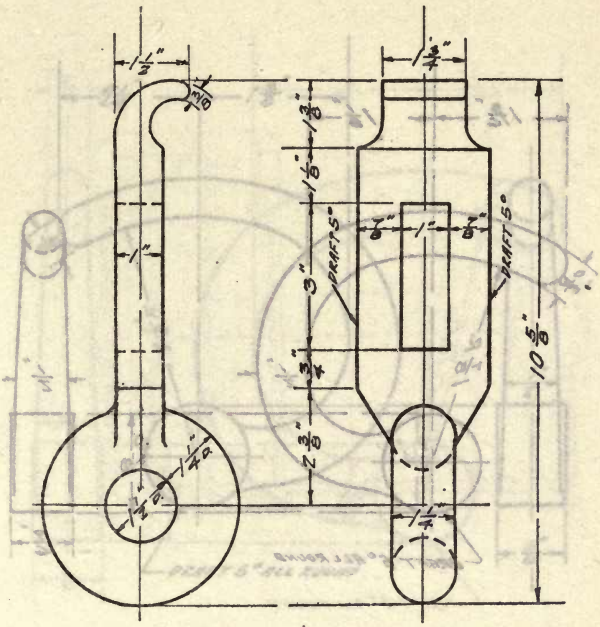

HASP, BLOCK, WOOD, SNATCH, 20″

Weight,

Die number, 3315-M

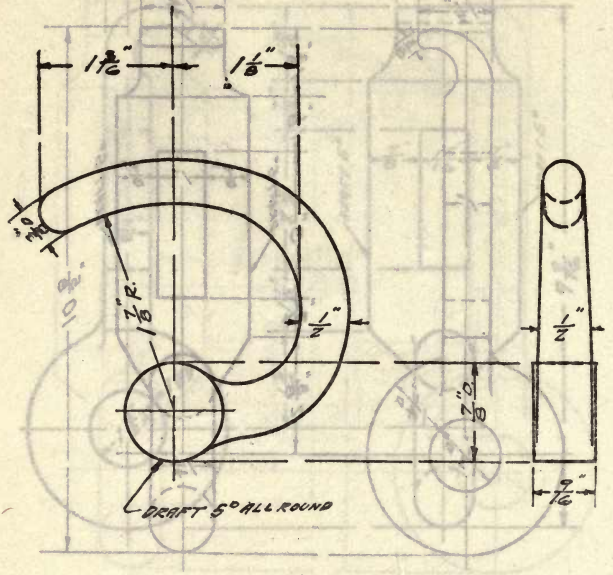

LATCH, BLOCK, WOOD, SNATCH, 14″

Weight, **Die number, 3316-M**

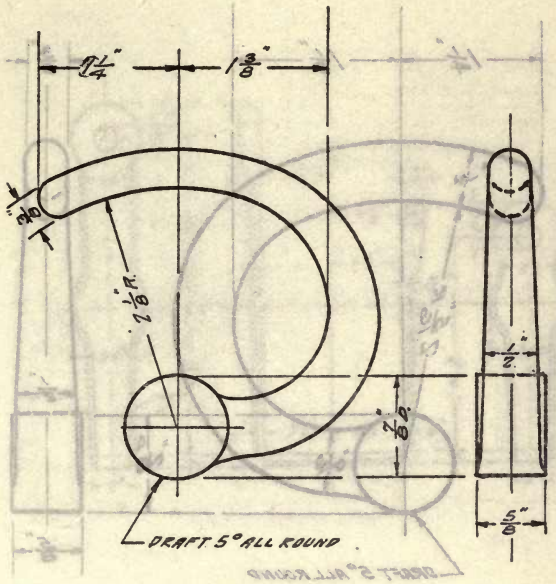

LATCH, BLOCK, WOOD, SNATCH, 15″

Weight, **Die number, 3317-M**

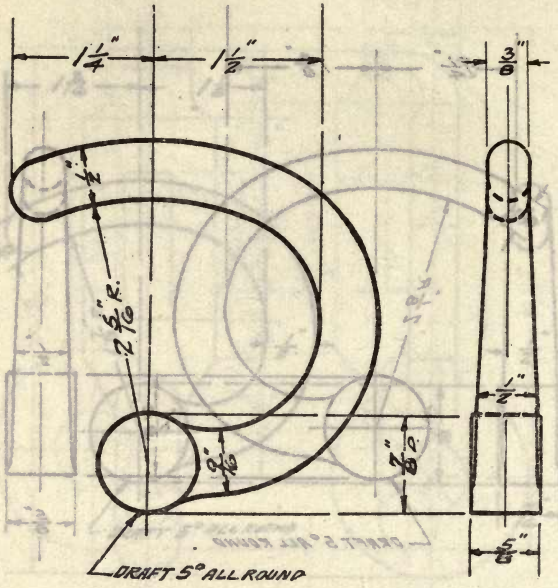

LATCH, BLOCK, WOOD, SNATCH, 20″

Weight, **Die number, 3318-M**

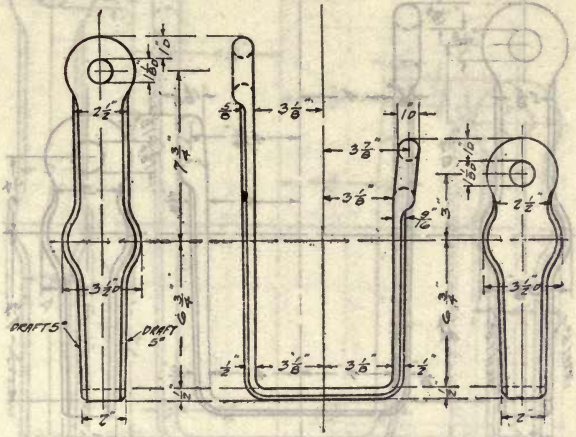

STRAP, BLOCK, WOOD, SNATCH, 14″

Weight, **Die number, 3319-M**

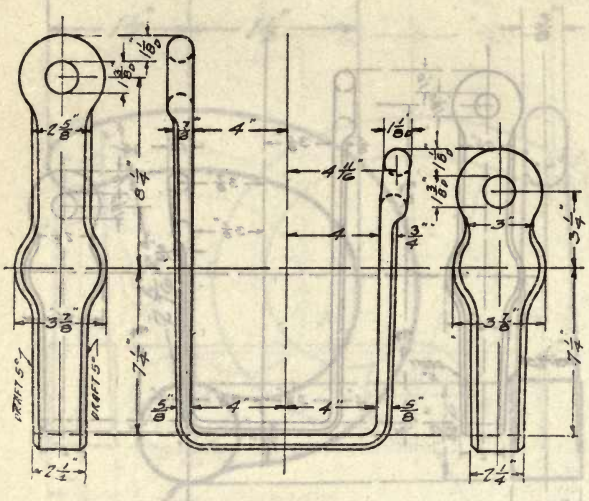

STRAP, BLOCK, WOOD, SNATCH, 15″

Weight, **Die number, 3320-M**

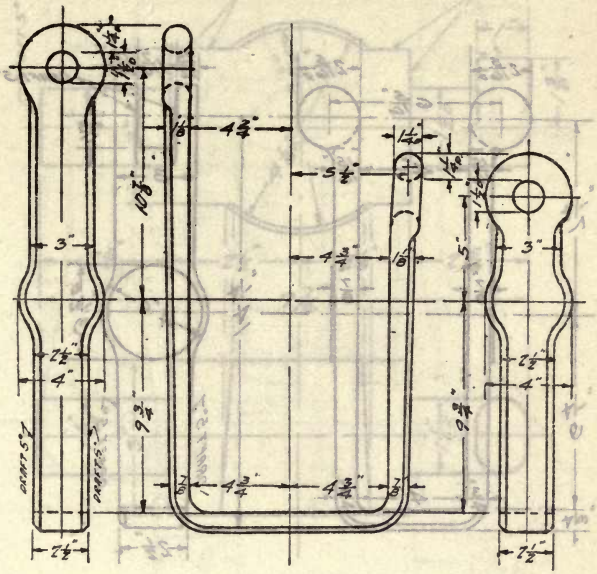

STRAP, BLOCK, WOOD, SNATCH, 20″

Weight, **Die number, 3321-M**

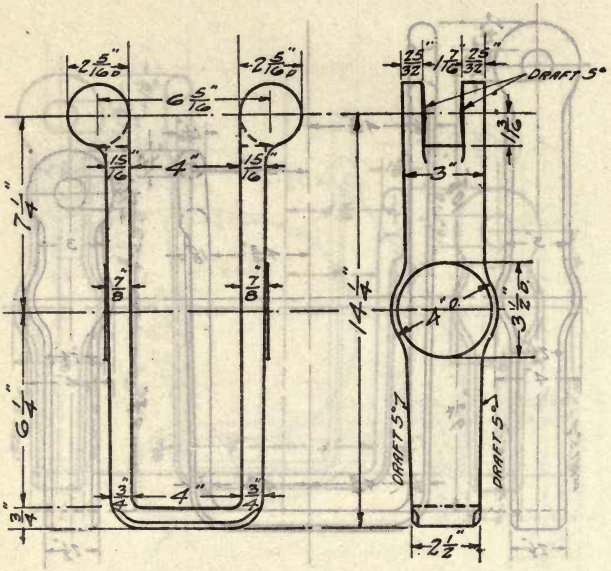

STRAP, BLOCK, METAL, SNATCH, 17″

Weight, **Die number, 3322-M**

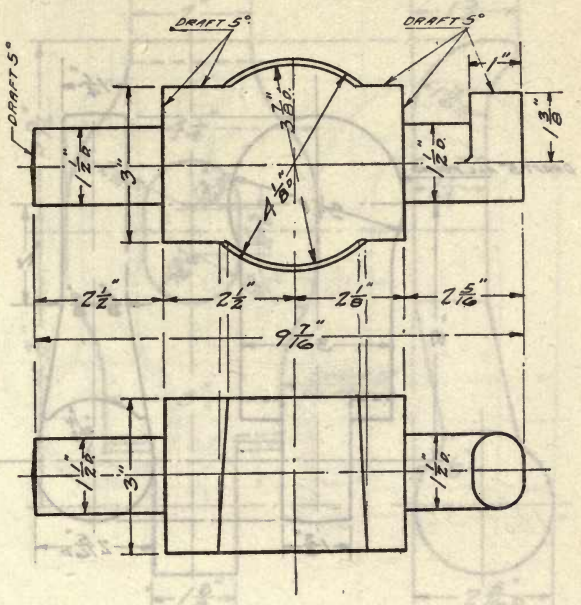

CROSSHEAD, BLOCK, METAL, SNATCH, 17″

Weight, lbs. **Die number, 3323-M**

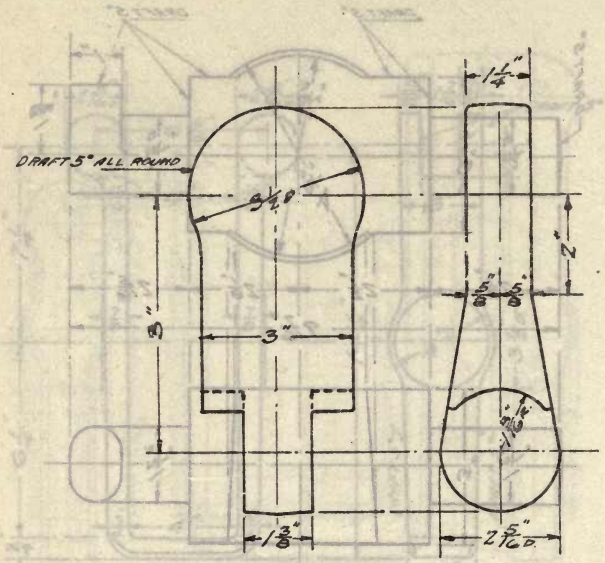

LINK, BLOCK, METAL, SNATCH, 17″

Weight, **Die number, 3324-M**

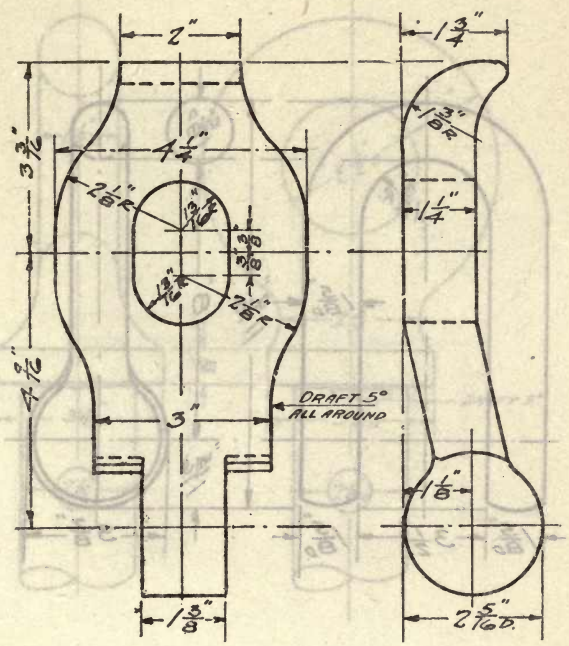

HASP, BLOCK, METAL, SNATCH, 17″

Weight, **Die number, 3325-M**

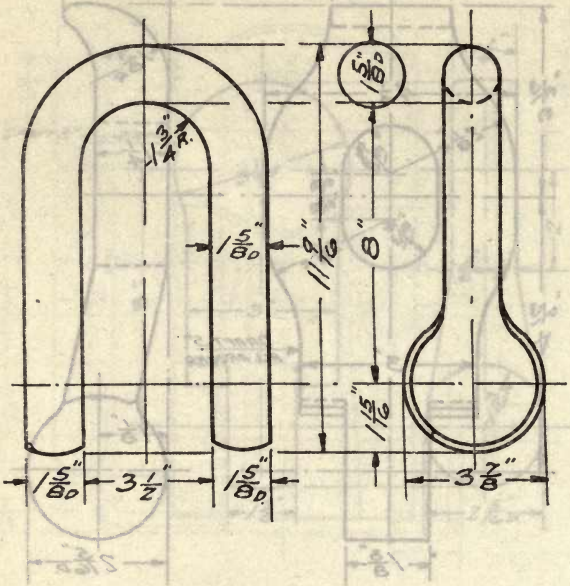

SHACKLE, REGULAR, 1 5/8″

Weight, **Die number, 3326-M**

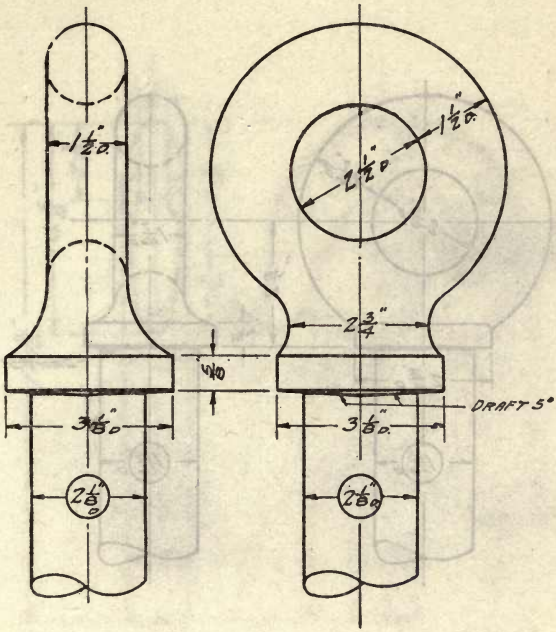

BOLT, EYE, COLLAR, 2 1/8″

Eye, 2 1/2″ Length, open die

Weight, lbs. Die number, 3327-M

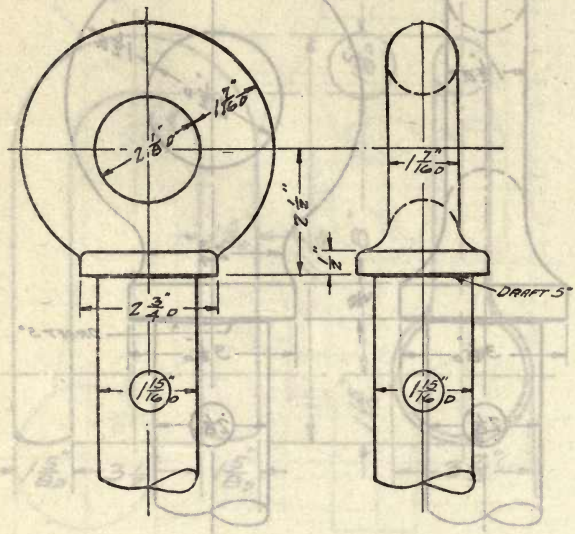

BOLT, EYE, COLLAR, 1 15/16″

Eye, 2 1/8″ Length, open die

Weight, lbs. Die number, 3328-M

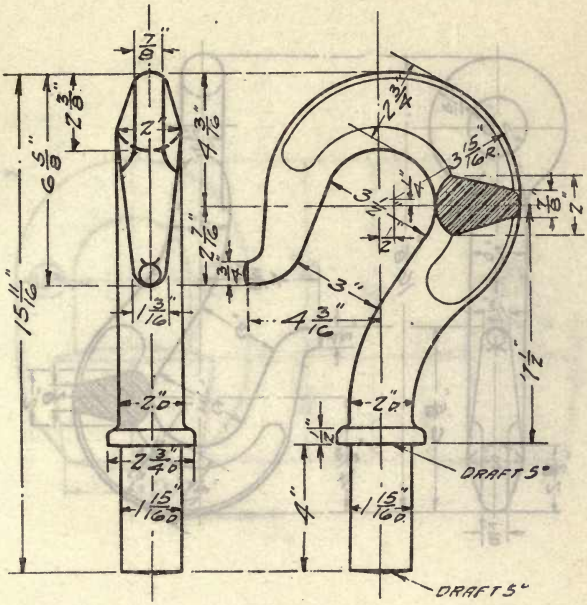

HOOK, SWIVEL, 2 3/8″

Weight, lbs. **Die number, 3329-M**

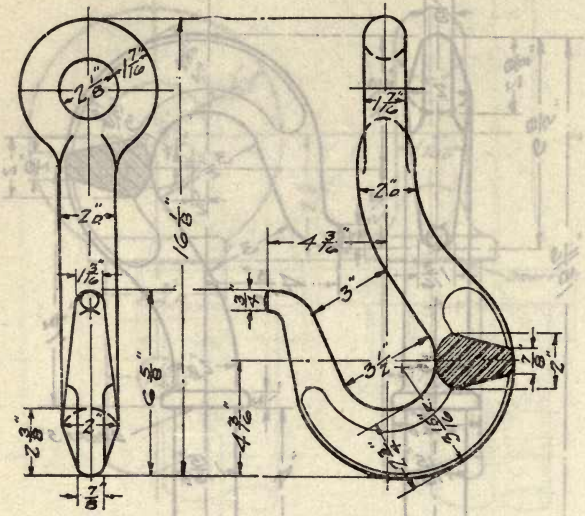

HOOK, SINGLE, SIDE, 2 3/8″

Weight, lbs. **Die number, 3330-M**

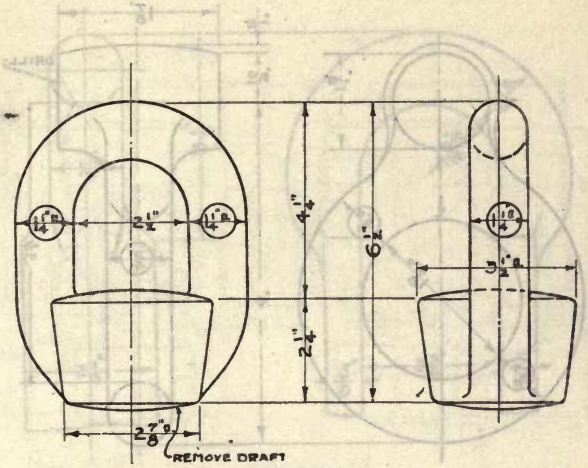

SWIVEL LINK, 1 1/4″

Weight (steel), **lbs.** **Die number, 3331-YM**

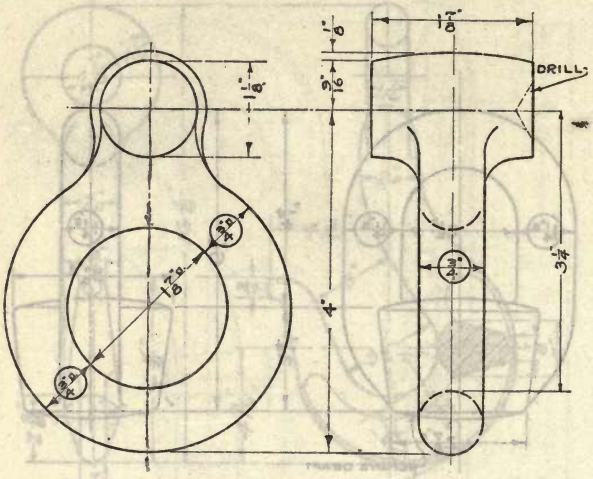

BECKET, 3/4″

Eye, 1 7/8″ Length, 3 1/4″

Weight (steel), lbs. Die number, 3332-YM

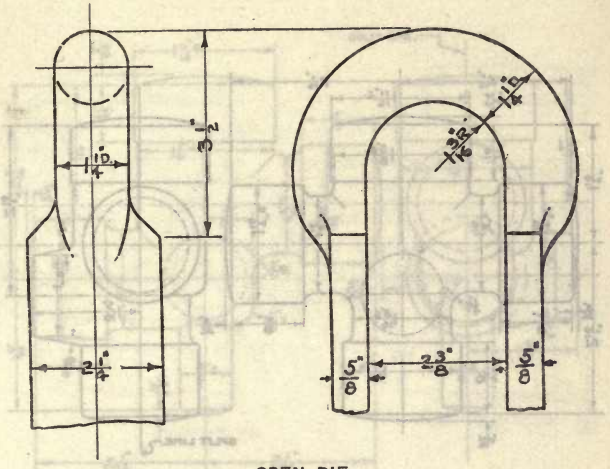

OPEN DIE

STRAP, BLOCK, SINGLE, METAL, 14″

Weight (steel), **lbs.** **Die number, 3333-Y**

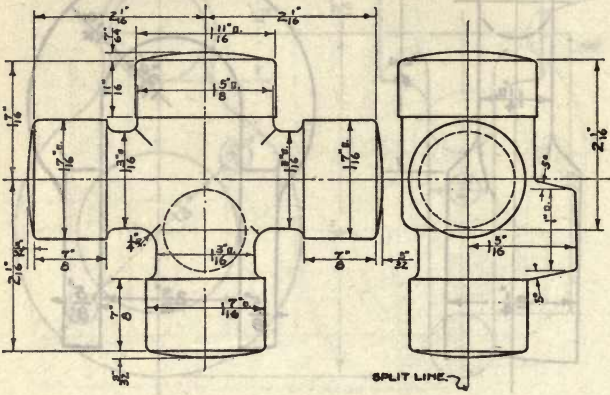

VALVE, CROSS, H. P.

Weight (steel), **lbs.** **Die number, 3334-Y**

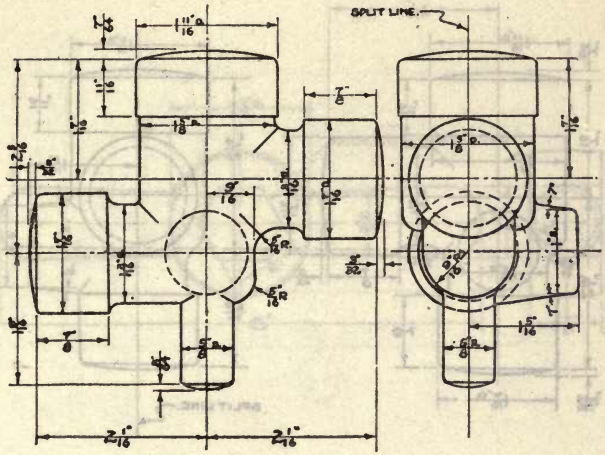

VALVE, GLOBE, H. P.

Weight (steel), **lbs.** **Die number, 3335-Y**

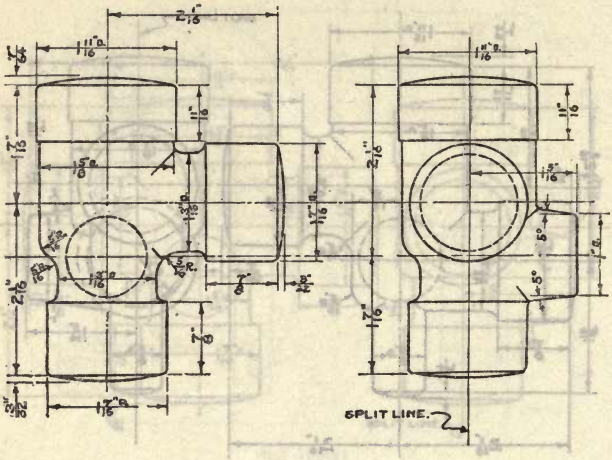

VALVE, ANGLE, H. P.

Weight (steel), **lbs.** **Die number, 3336-Y**

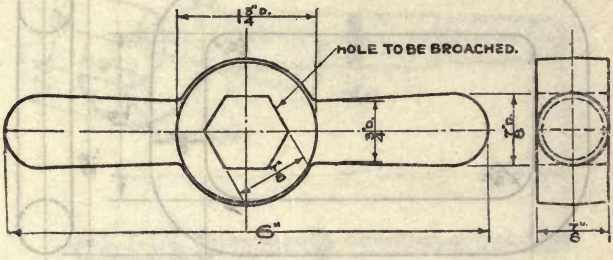

HANDLE, VALVE, H. P.

Weight (steel), lbs. Die number, 3337-Y

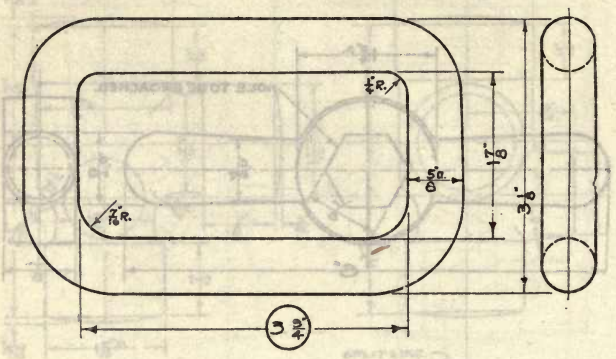

HANDLE, 3 3/4″

Weight (steel), **lbs.** **Die number, 3338-Y**

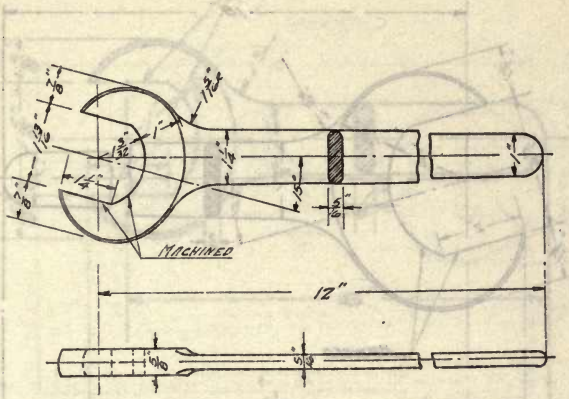

WRENCH, MACHINE, SINGLE-ENDED, 15°, 1 1/8″

Weight (steel), lbs. **Die number, 3339-M**

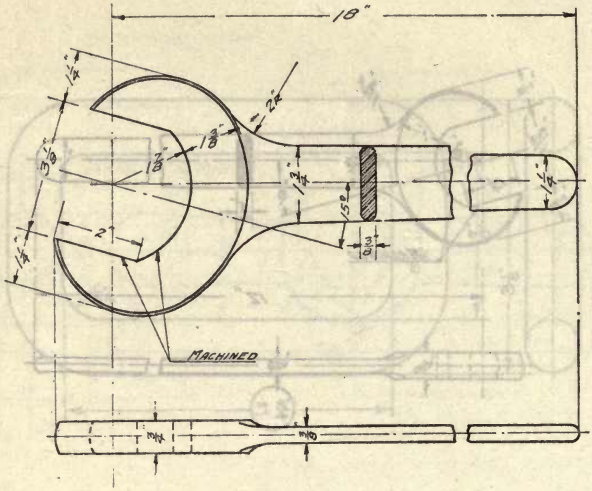

WRENCH, MACHINE, SINGLE-ENDED, 15°, 2″

Weight (steel), **lbs.** **Die number, 3340-M**

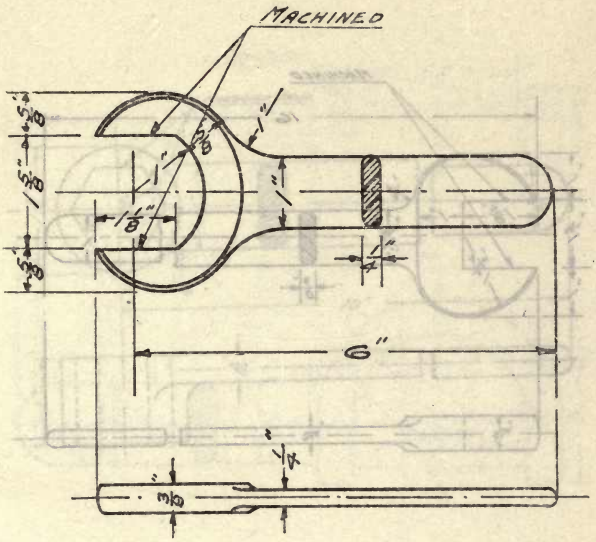

WRENCH, MACHINE, SINGLE-ENDED, STRAIGHT, 1″

Weight (steel), **lbs.** **Die number, 3341-M**

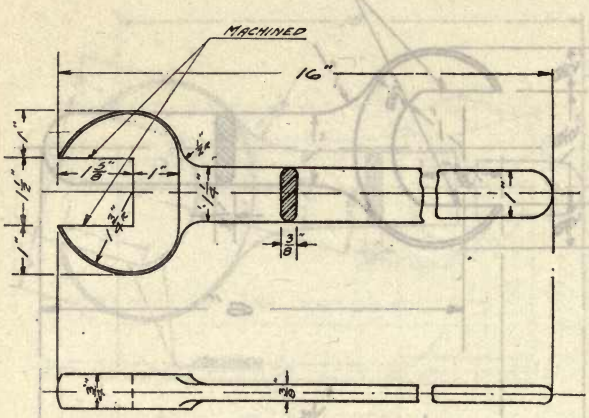

WRENCH, MACHINE, SINGLE-ENDED, STRAIGHT, 1 1/2″

Jacking wrench

Weight (steel), lbs. **Die number, 3342-M**

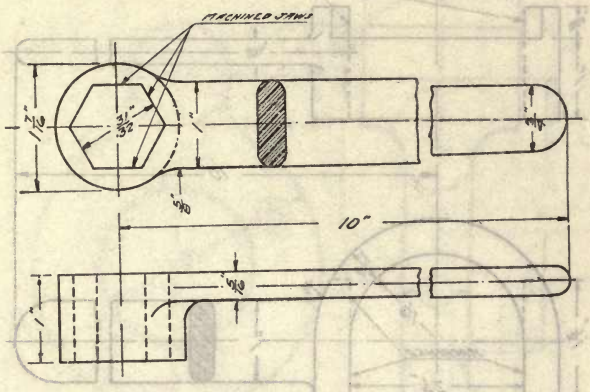

WRENCH, COUPLING, 31/32"

Weight (steel), lbs. **Die number, 3343-M**

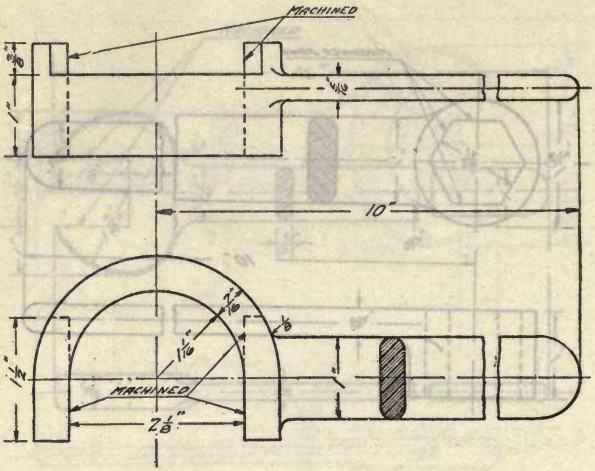

WRENCH, THROTTLE, SECTOR, 2 1/8″

Weight (steel), **lbs.** **Die number, 3344-M**

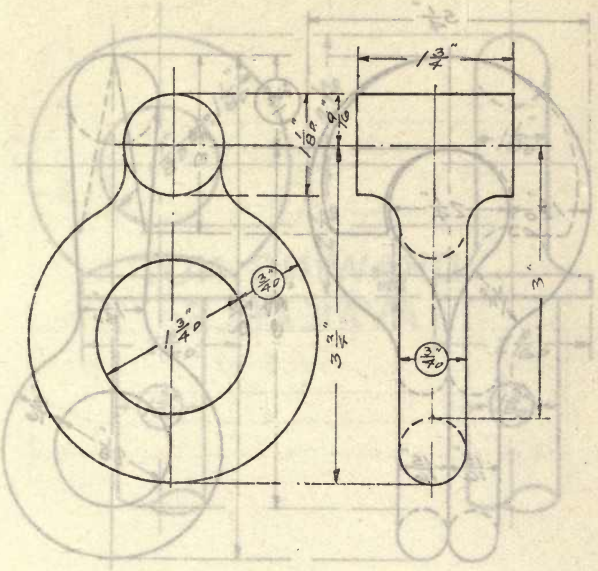

BECKET, 3/4″

Eye, 1 3/4″ Length, 3″

Weight (steel), lbs. Die number, 3345-M

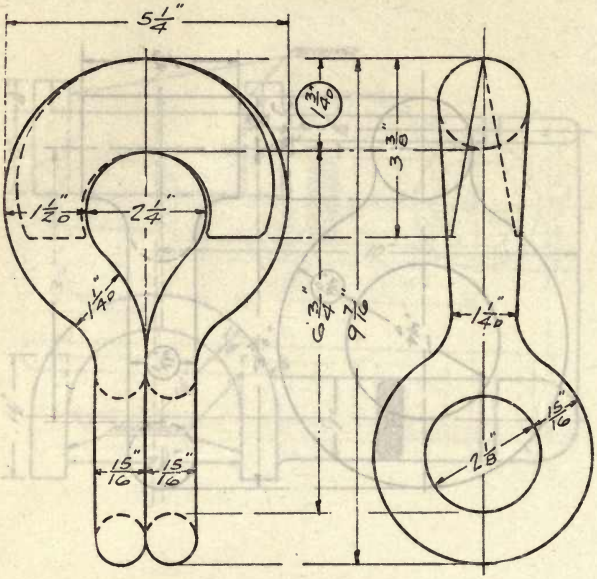

HOOK, SISTER, 1 3/4″

Weight (steel), lbs. **Die number, 3346-M**

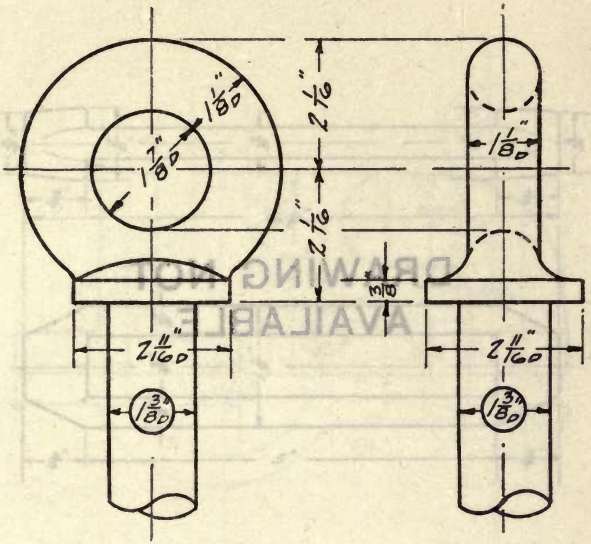

BOLT, EYE, COLLAR, 1 3/8″

Eye, 1 7/8″ **Length, open die**

Weight (steel), **lbs.** **Die number, 3347-M**

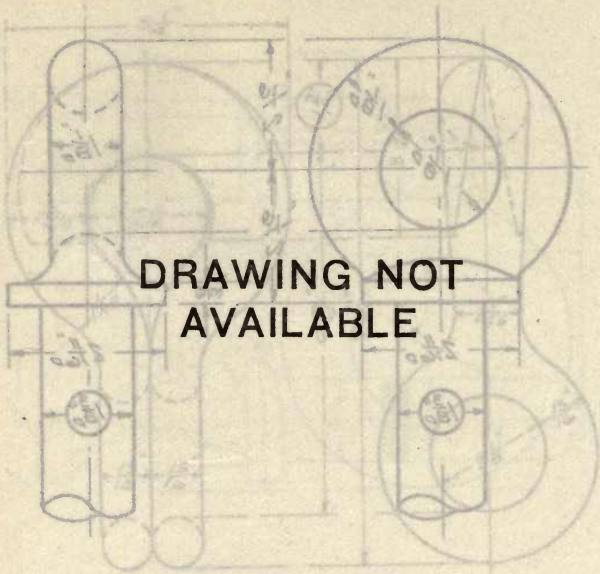

Die number, 3348

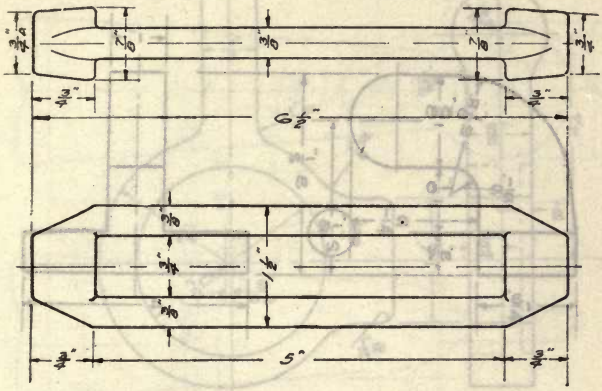

TURNBUCKLE, 3/8″

Weight, lbs. **Die number, 3349-M**

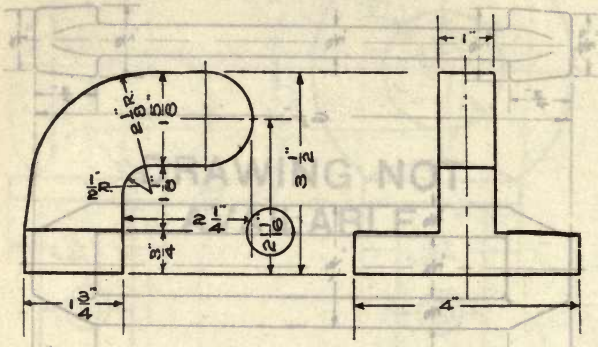

HINGE, PAD, MALE, 2 11/16″

Size of pad, 4″ x 1 3/4″ x 3/4″

Weight, lbs. **Die number, 3350-N**

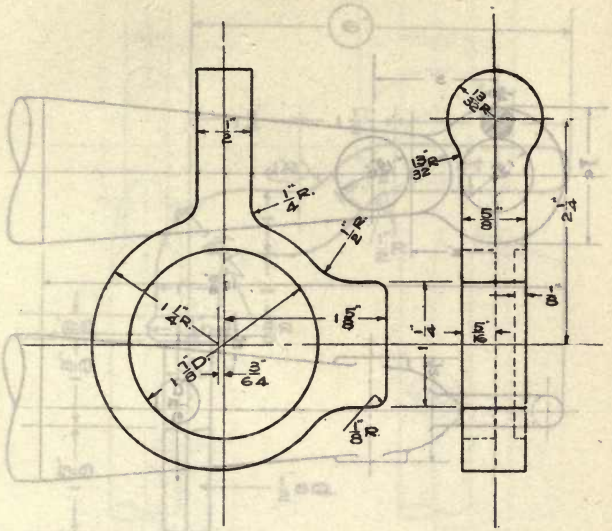

CLAMP, PEEP SIGHT

Weight, lbs. Die number, 3351-N

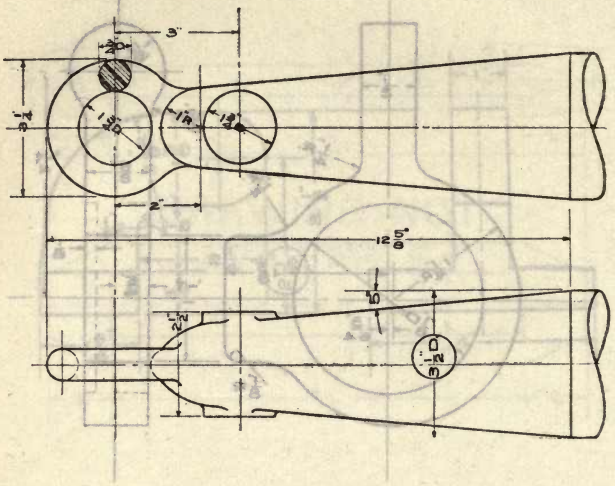

HEAD, STANCHION, 3 1/2″

Weight, lbs. **Die number, 3352-N**

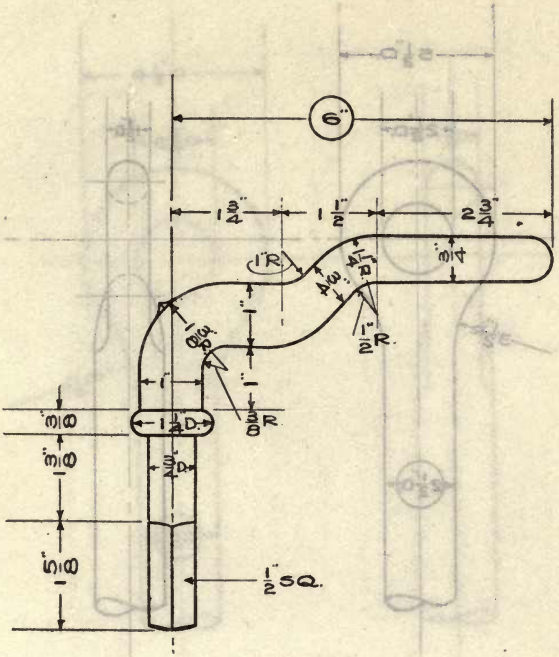

DOG, HANDLED, WITH SPINDLE, 6″

Weight, lbs. **Die number, 3353-N**

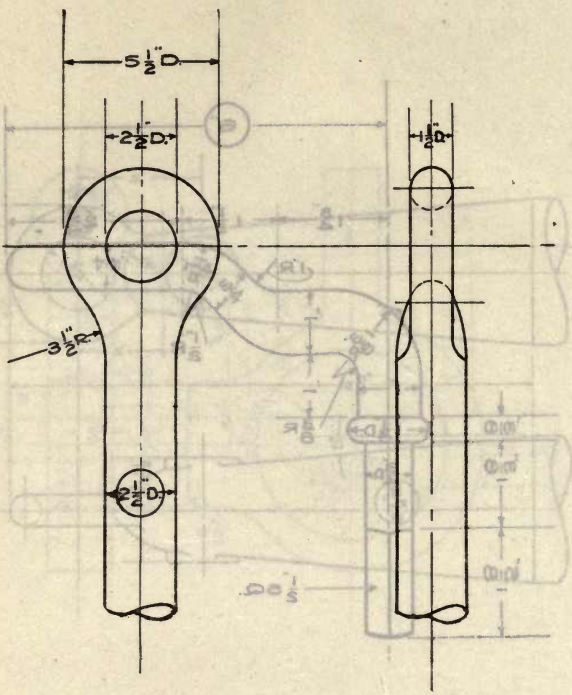

BOLT, EYE, 2 1/2″

Eye, 2 1/2″ Length, open die

Weight, lbs. Die number, 3354-N

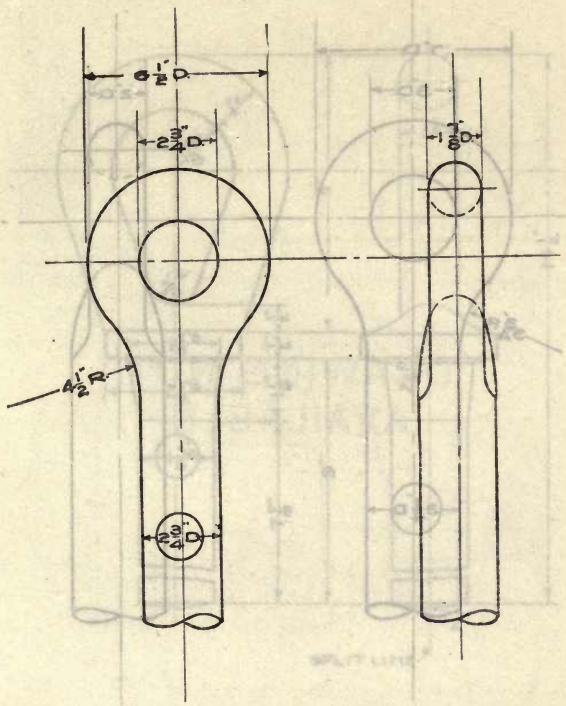

BOLT, EYE, 2 3/4″

Eye, 2 3/4″ Length, open die

Weight, lbs. Die number, 3355-N

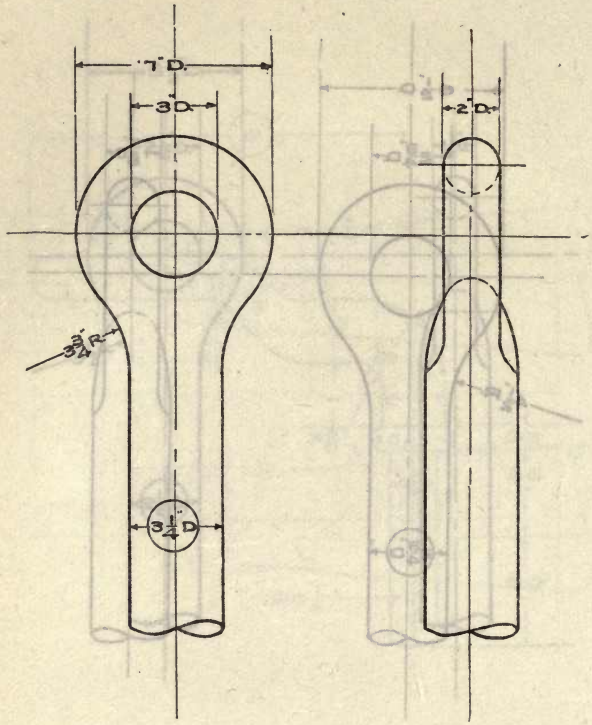

BOLT, EYE, 3 1/4″

Eye, 3″ Length, open die

Weight, lbs. Die number, 3356-N

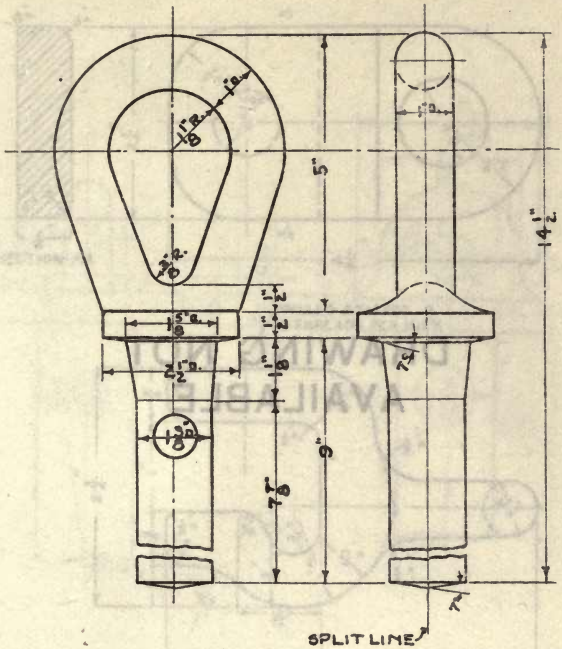

BOLT, EYE, COLLAR, 1 3/8″

Davit head fitting

Weight (steel), lbs. Die number, 3357-Y

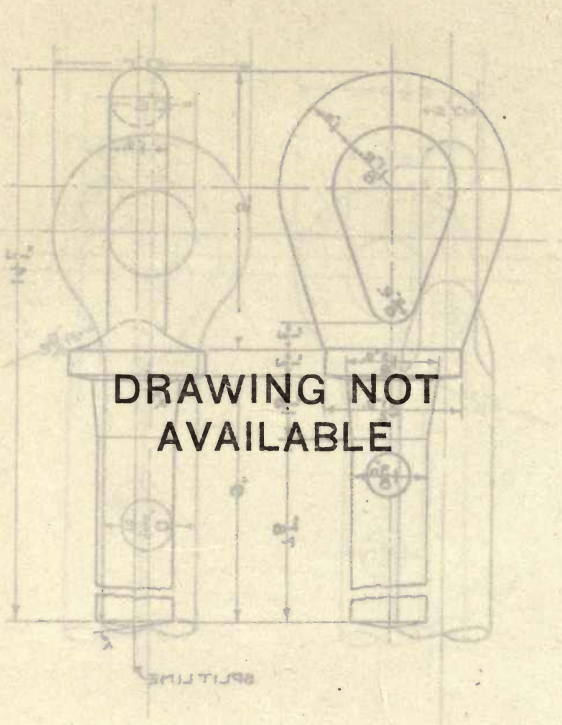

Die number, 3358

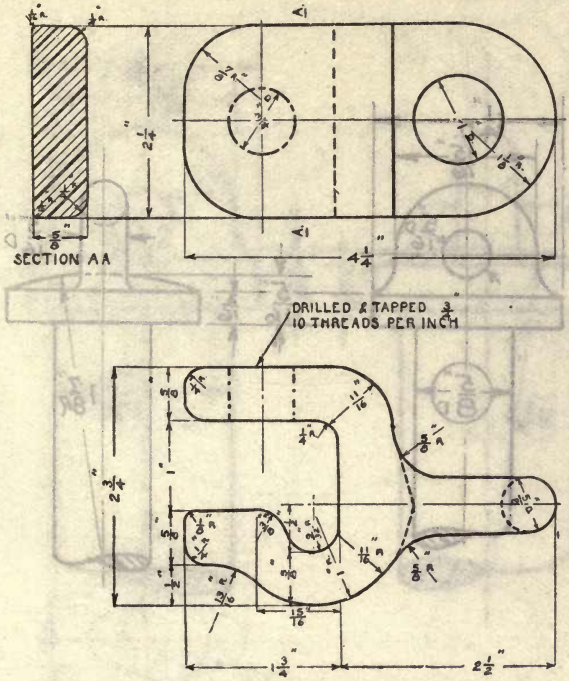

CLAMP, BEAM DECK

For 3" x 2" x 3.6 lb. bulb angle

Weight (steel), lbs. **Die number, 3359-B**

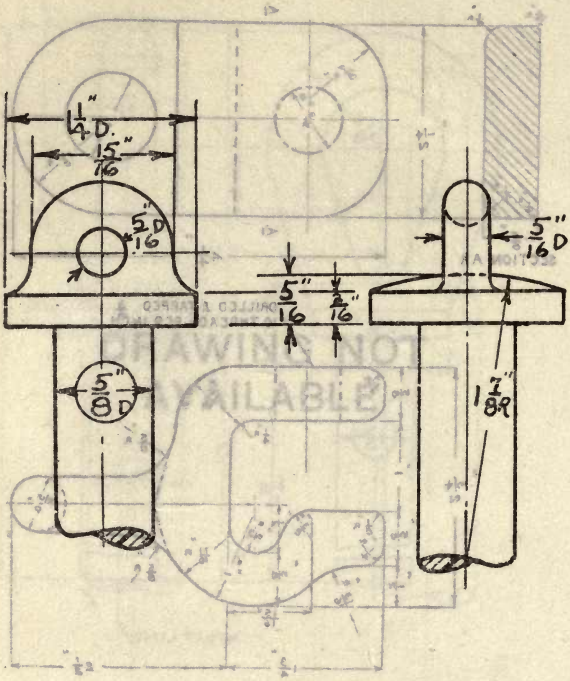

BOLT, EYE, COLLAR, 5/8″

Eye, 5/16″ . . . Length, open die

Weight (steel), . . . lbs. **Die number, 3360-B**

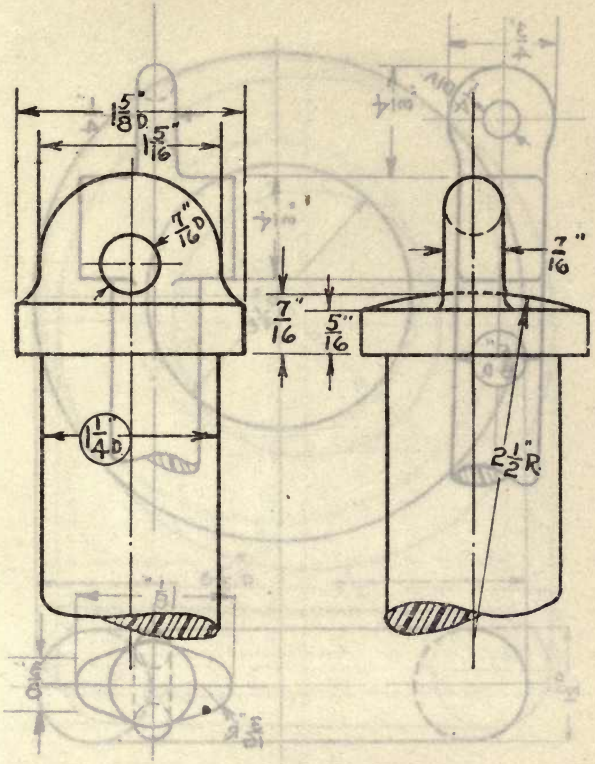

BOLT, EYE, COLLAR, 1 1/4″

Eye, 7/16″ Length, open die

Weight (steel), lbs. Die number, 3361-B

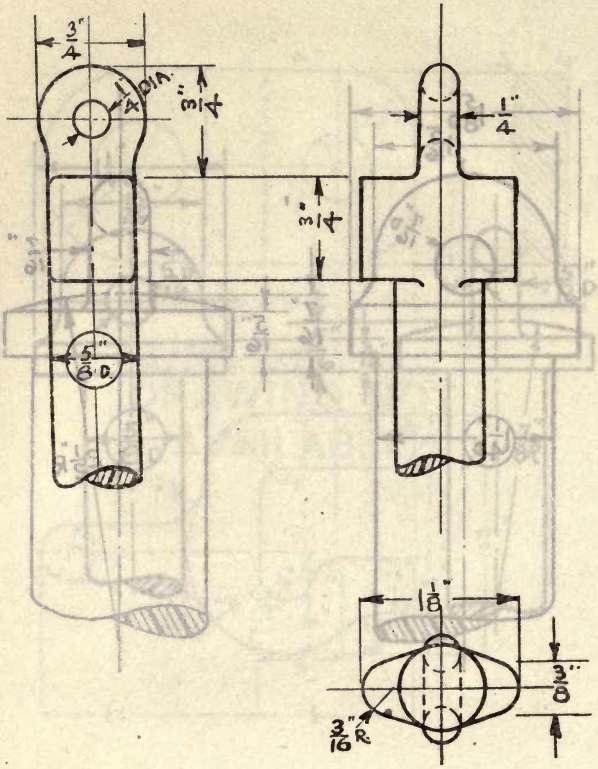

PIN, LOCKING, 5/8″

Eye, 1/4″ dia. Length, open die

Weight (steel), lbs. Die number, 3362-B

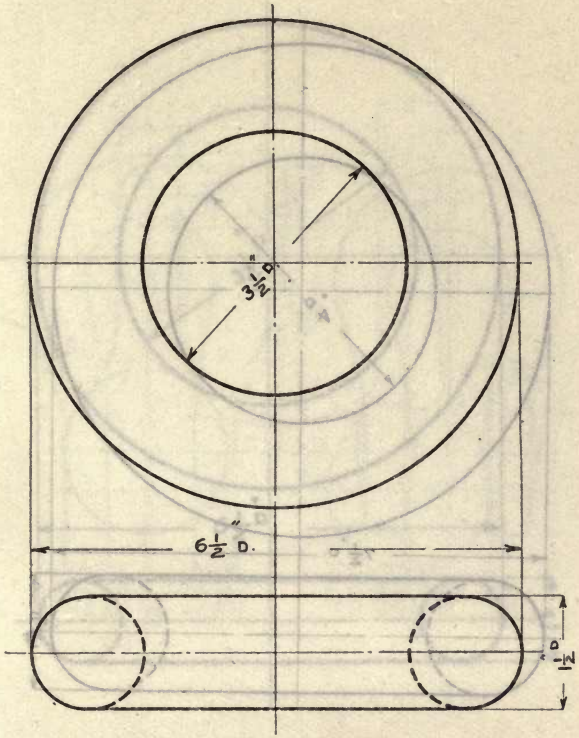

RING, 3 1/2″ X 1 1/2″

Weight (steel), lbs. **Die number, 3363-B**

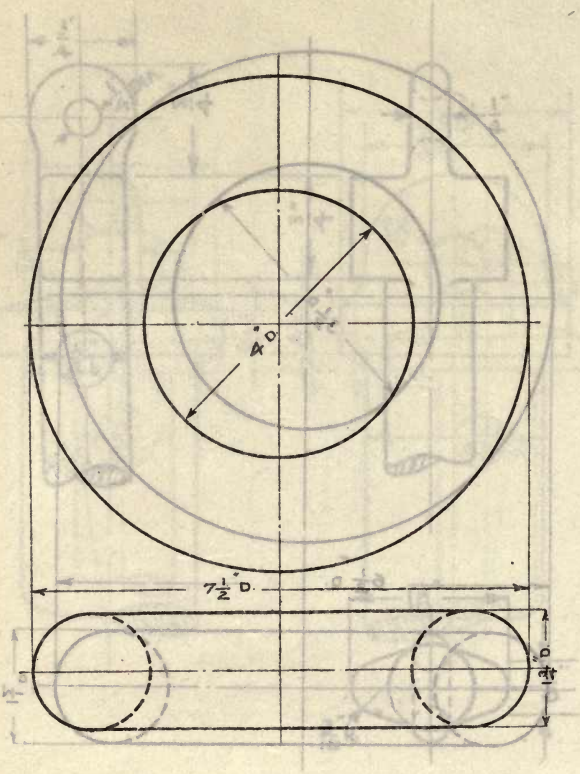

RING, 4″ X 1 3/4″

Weight (steel), lbs. **Die number, 3364-B**

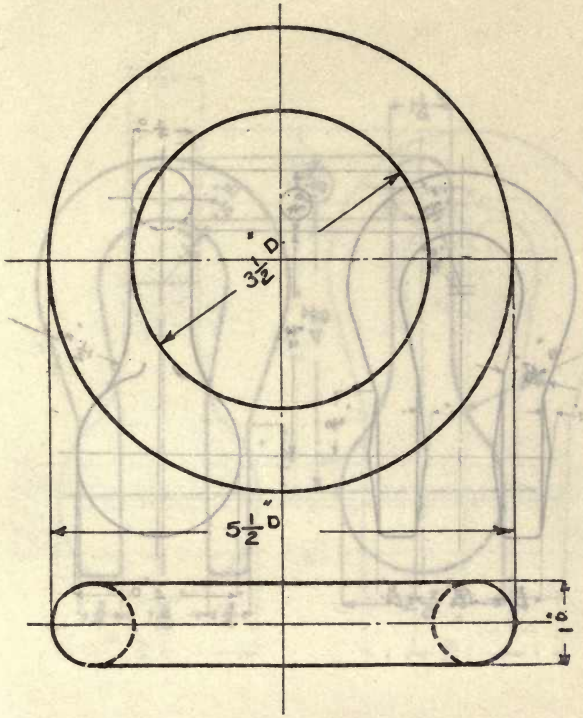

RING, 3 1/2″ X 1″

Weight (steel), lbs. Die number, 3365-B

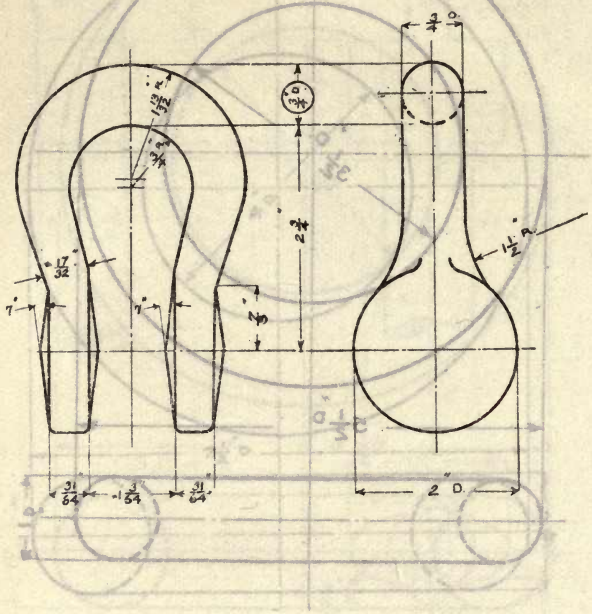

SHACKLE, REGULAR, 3/4″

Weight, lbs. **Die number, 3366-B**

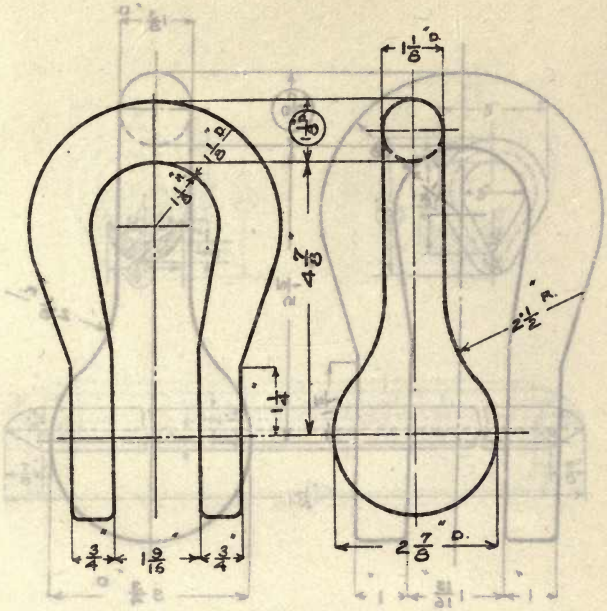

SHACKLE, REGULAR, 1 1/8″

Weight, lbs. **Die number, 3367-B**

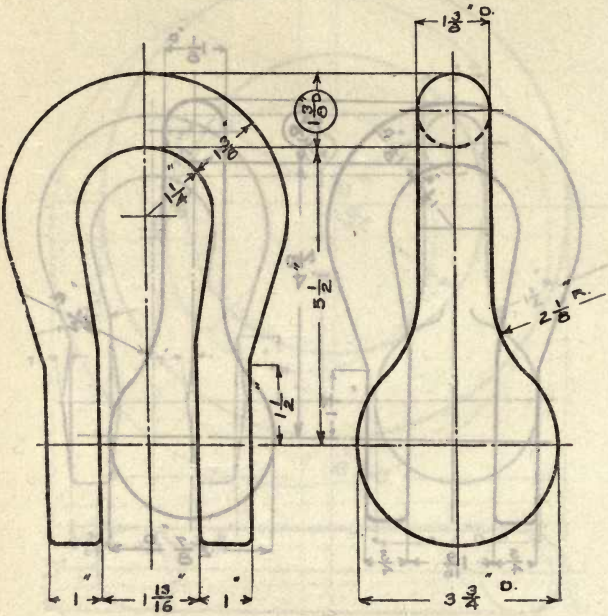

SHACKLE, REGULAR, 1 3/8″

Weight, lbs. **Die number, 3368-B**

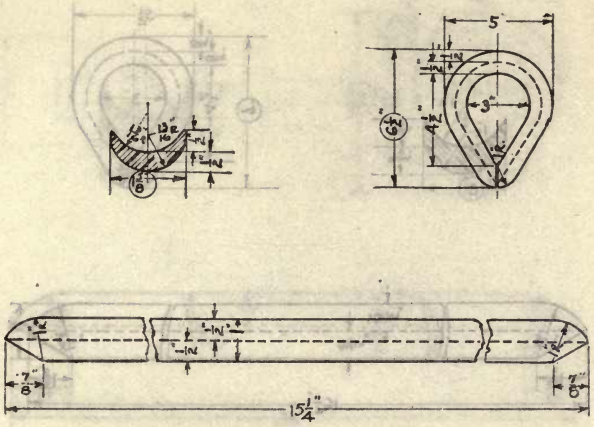

THIMBLE, 1 5/8″ X 6 1/2″

Weight (steel), lbs. **Die number, 3369-B**

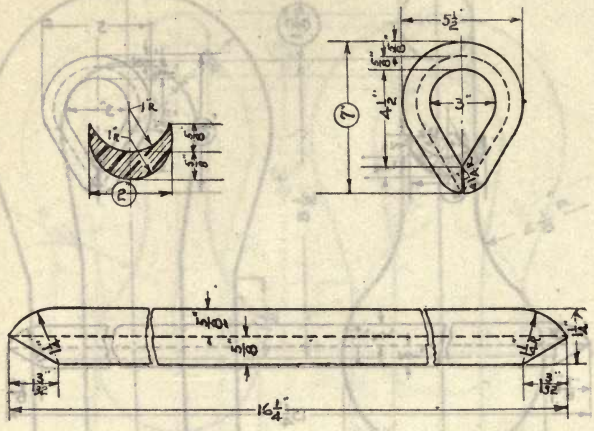

THIMBLE, 2″ X 7″

Weight (steel), lbs. **Die number, 8370-B**

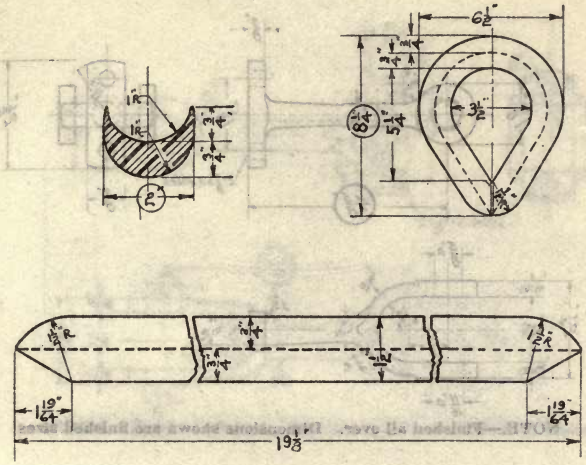

THIMBLE, 2″ X 8 1/4″

Weight (steel), **lbs.** **Die number, 8371-B**

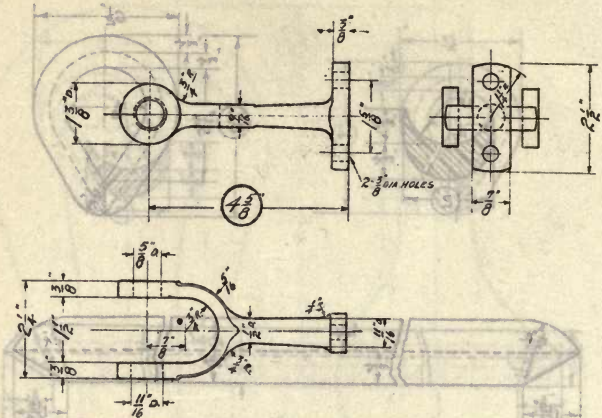

NOTE.—Finished all over. Dimensions shown are finished sizes

ROD, CONNECTING, ENGINE, BLOWER, 4 5/8″

For steamer engine, type "W-1"

Weight (steel), 0.978 lb. **Die number, 3372-Y**

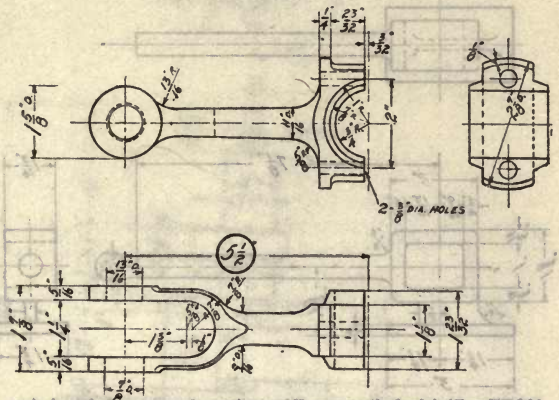

NOTE.—Finished all over. Dimensions shown are finished sizes

ROD, CONNECTING, ENGINE, CIRCULATING, 5 1/2″

For steamer engine, type "W-1"

Weight (steel), 1.45 lbs. **Die number, 3373-Y**

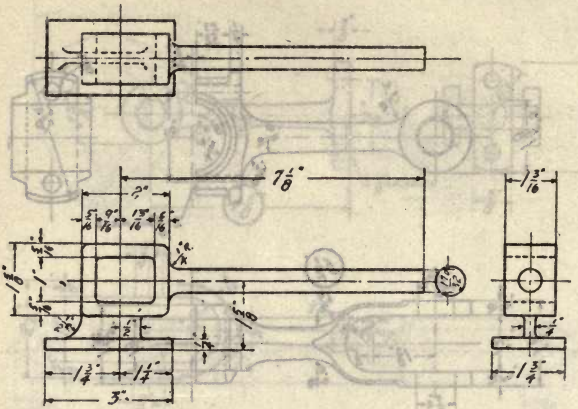

NOTE.—Finished all over. Dimensions shown are finished sizes

ROD, PISTON, 17/32," D., WITH CROSSHEAD, ENGINE, BLOWER

For steamer engine, type "W-1"

Weight (steel), 1.43 lbs. Die number, 3374-Y

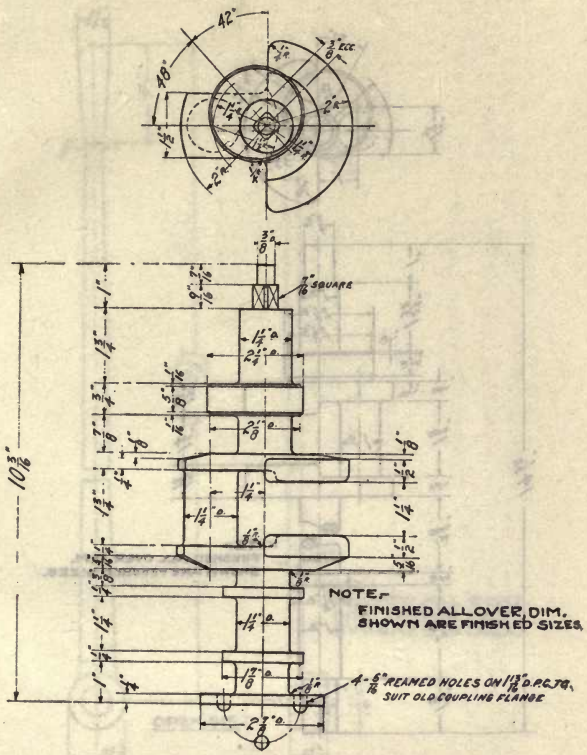

SHAFT, CRANK, ENGINE, CIRCULATING

For steamer engine, type "W-1"

Weight (steel), 7.0 lbs. **Die number, 3375-Y**

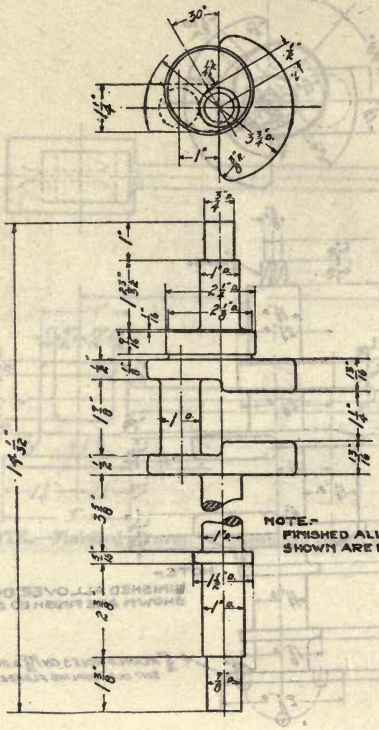

SHAFT, CRANK, ENGINE, BLOWER

For steamer engine, type "W-1"

Weight (steel), 6.5 lbs. **Die number, 3376-Y**

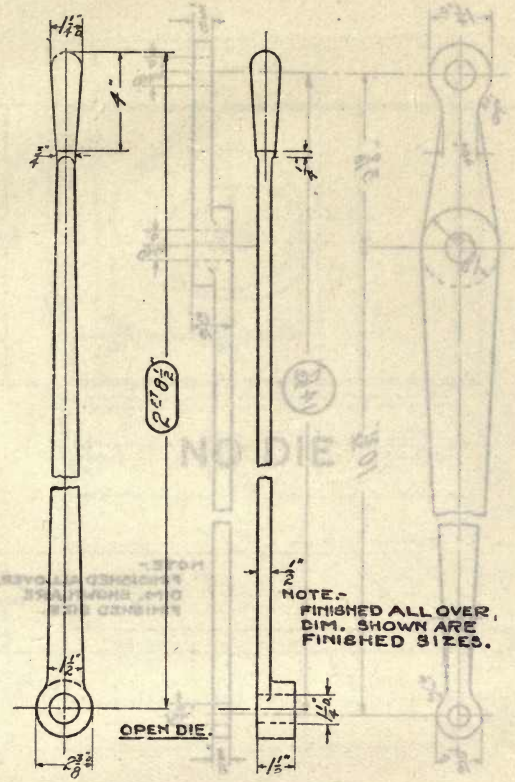

LEVER, REVERSING, 2′ 8 1/2″

For steamer engine, type "W-1"

Weight (steel), 7.5 lbs. **Die number, 3377-Y**

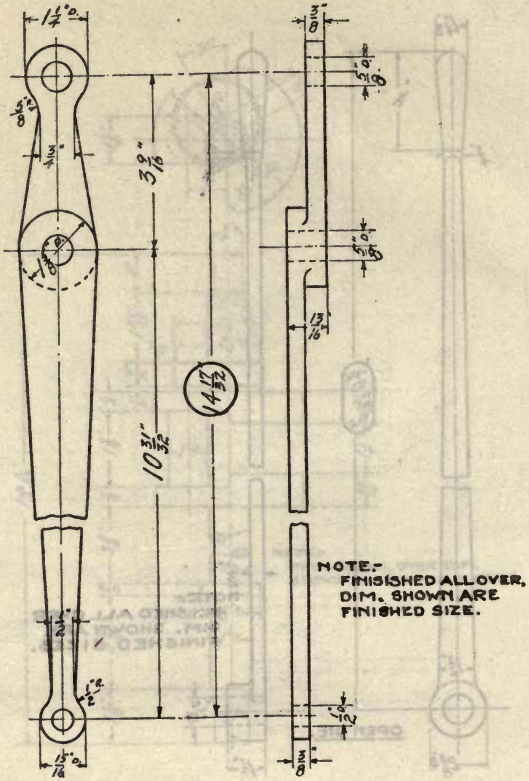

LEVER, PUMP, AIR, 14 17/32″

For steamer engine, type "W-1"

Weight (steel), 2.03 lbs. **Die number, 3378-Y**

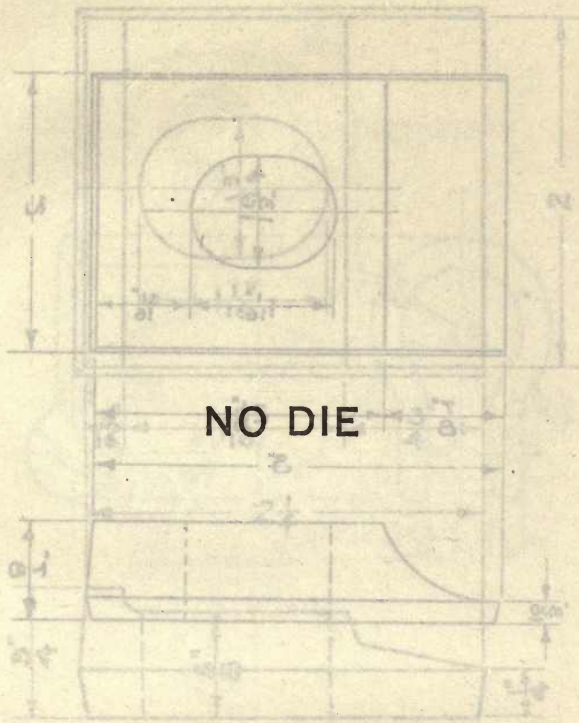

Die number, 3379

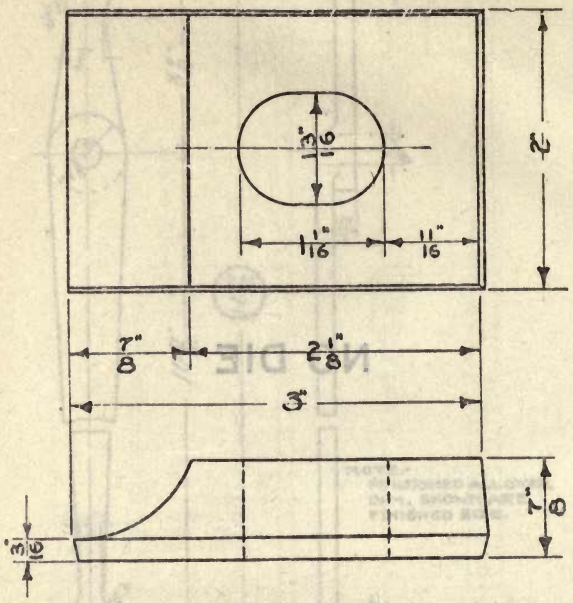

CLIP, RAIL

Weight (steel), lbs. Die number, 3380-Y

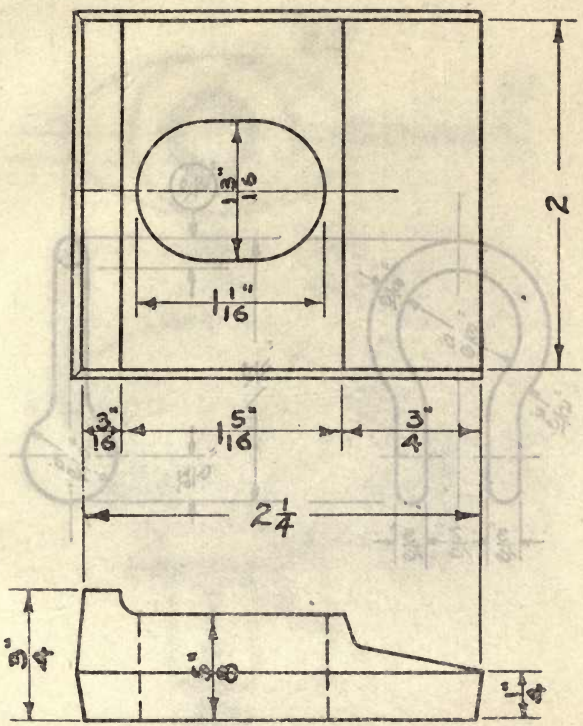

CLIP, RAIL.

Weight (steel), lbs. Die number, 3381-Y

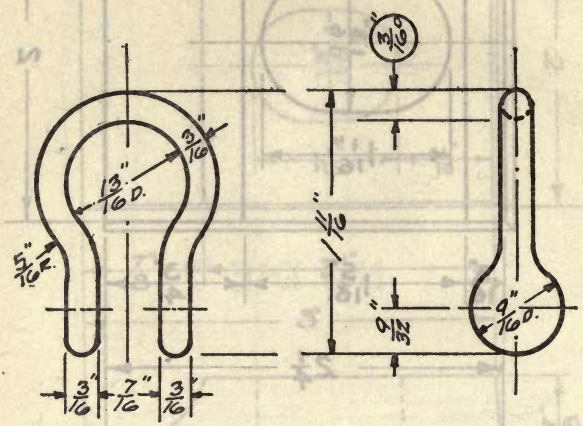

SHACKLE, REGULAR, 3/16″

Weight (steel), lbs. **Die number, 3382-M**

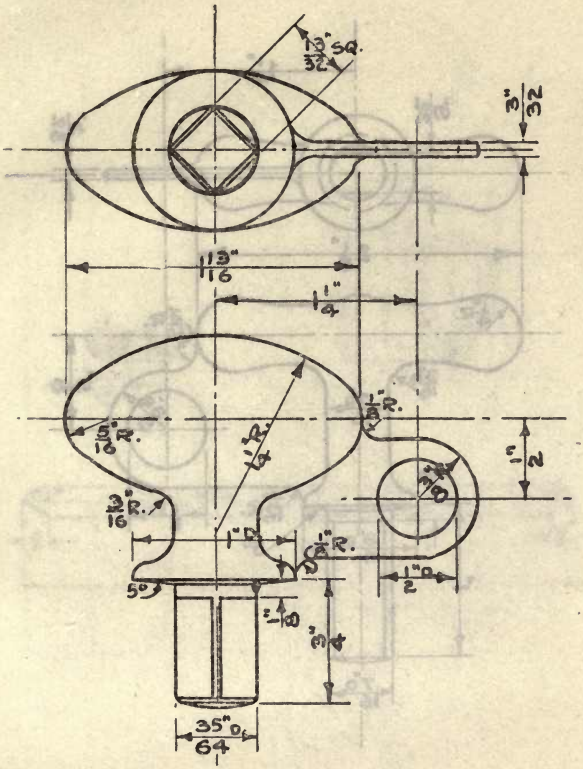

KNOB, DOOR

Weight (steel), lbs. Die number, 3383-Y

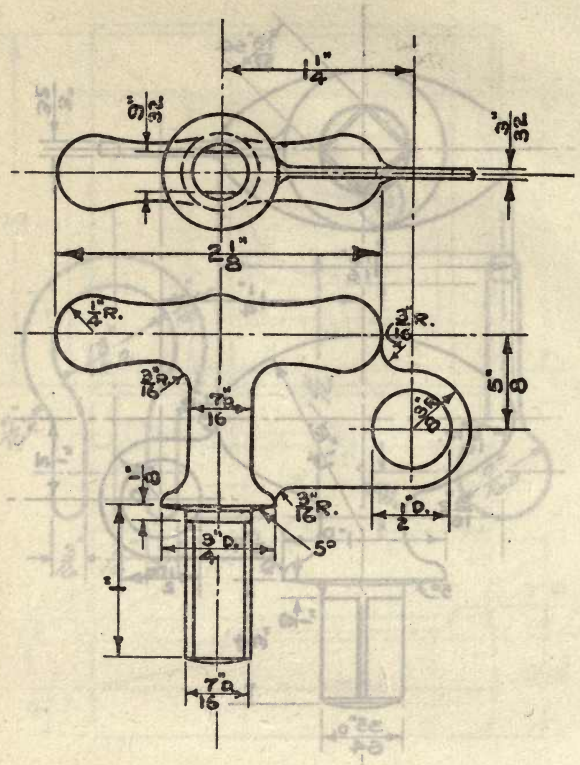

T-HANDLE, DOOR

Weight (steel), lbs. Die number, 3384-Y

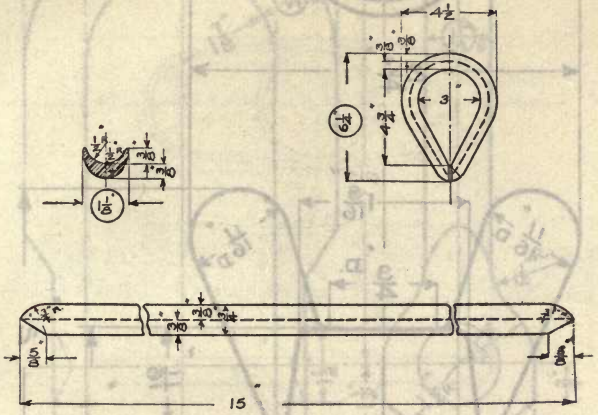

THIMBLE, 1 1/8″ X 6 1/4″

Weight (steel), **lbs.** **Die number, 3385-B**

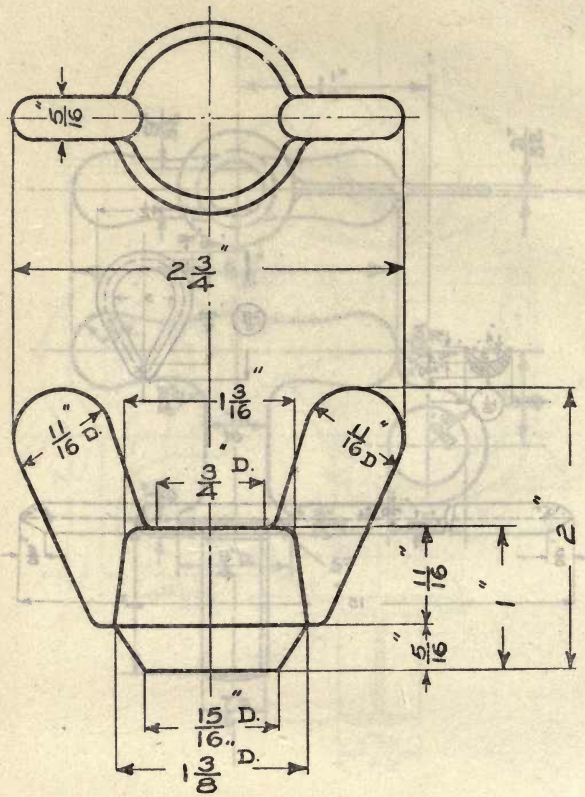

NUT, WING, 3/4″

Weight (steel), lbs. **Die number, 3386-B**

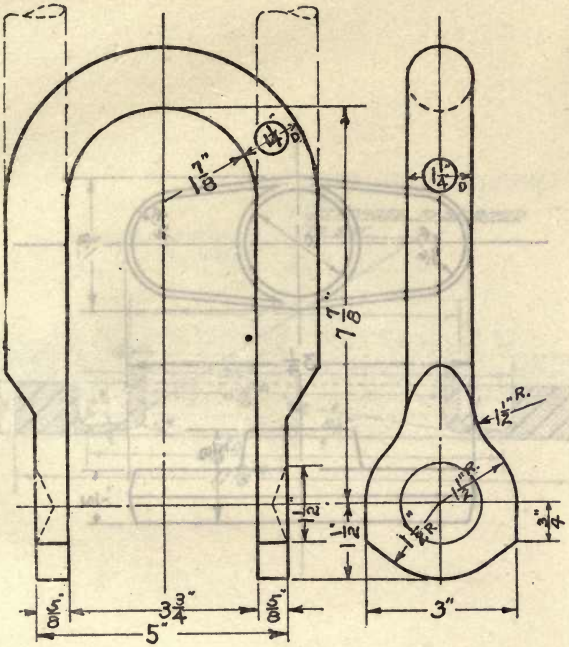

OPEN DIE

SHACKLE, HOISTING, BOAT, 1 1/4"

Weight, lbs. **Die number, 3387-B**

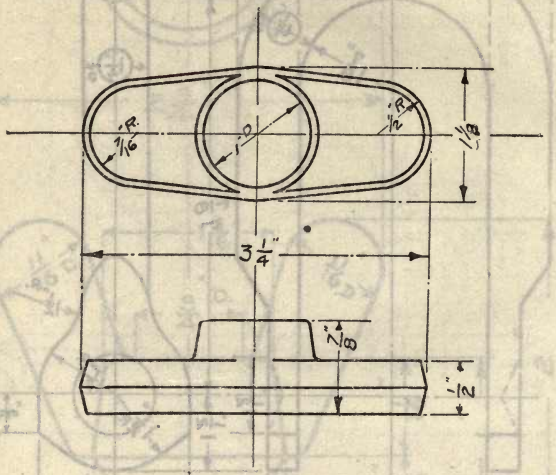

YOKE, VALVE, H. P., 1/2″ AND 3/4″

Weight (steel), **lbs.** **Die number, 3388-M**

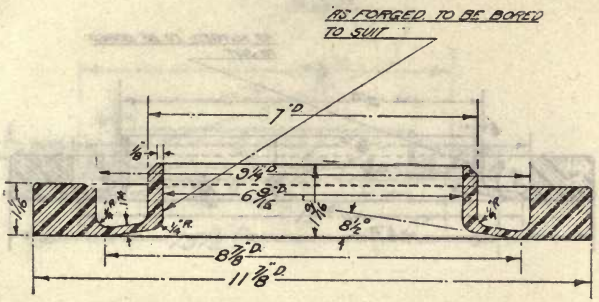

FLANGE, FLEXIBLE, 6 1/2″

Weight (steel), lbs. Die number, 3389-M

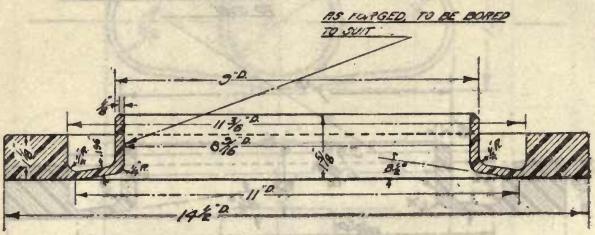

FLANGE, FLEXIBLE, 8 1/2″

Weight (steel), lbs. **Die number, 3390-M**

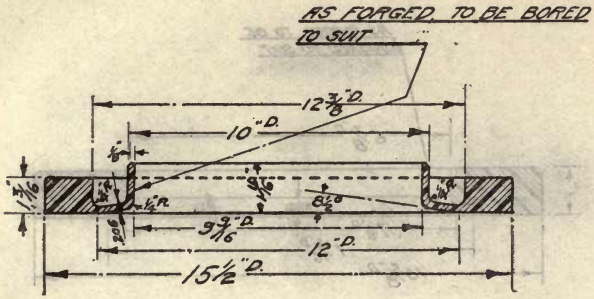

FLANGE, FLEXIBLE, 9 1/2"

Weight (steel), lbs. **Die number, 3391-M**

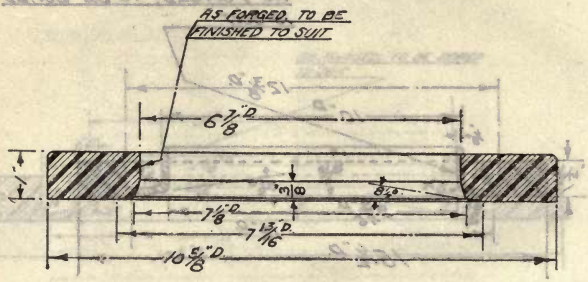

FLANGE, HOLLOW-HEEL, PLAIN, 6 1/2″

Weight (steel) lbs. **Die number, 3392-M**

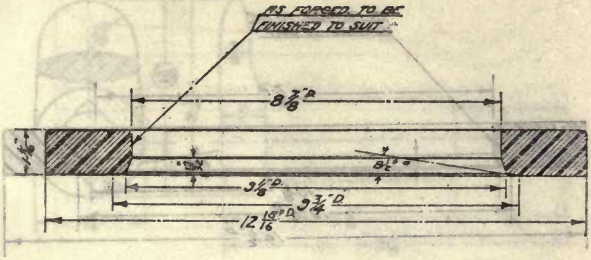

FLANGE, HOLLOW-HEEL, PLAIN, 8 1/2″

Weight (steel), lbs. **Die number, 3393-M**

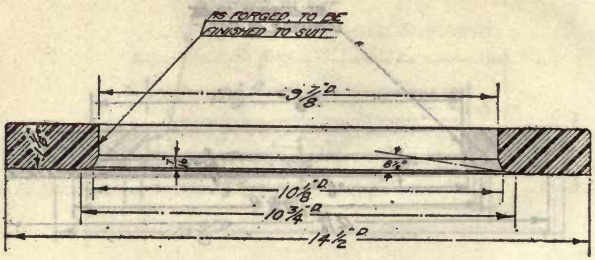

FLANGE, HOLLOW-HEEL, PLAIN, 9 1/2″

Weight (steel), lbs. **Die number, 3394-M**

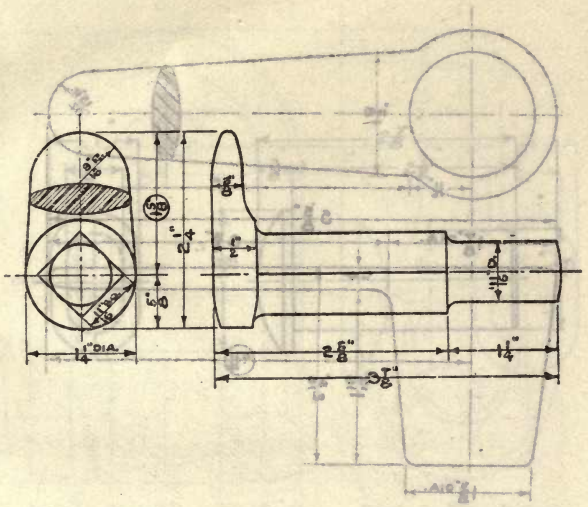

DOG, WITH SPINDLE, 1 5/8″

(For boiler casing use with die number 3396)

Weight (steel), lbs. Die number, 3395-Y

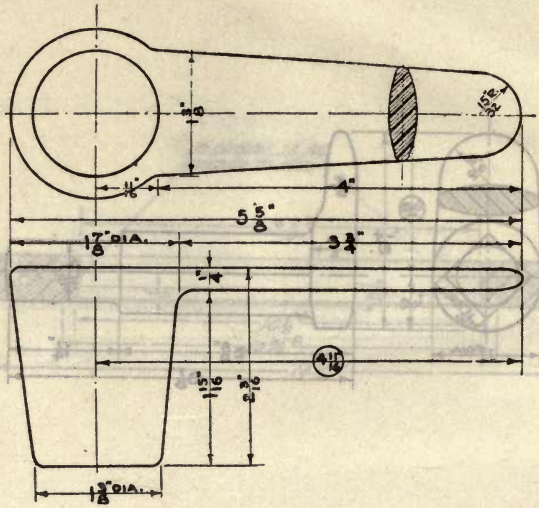

DOG, HANDLE, 4 11/16″

(For boiler casing use with die number 3395)

Weight (Steel), lbs. **Die number, 3396-Y**

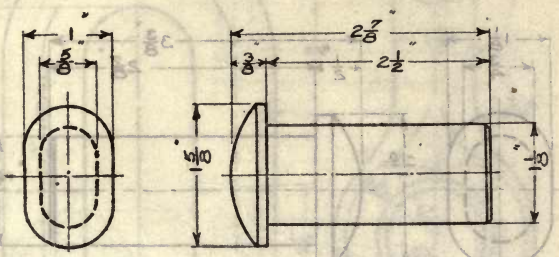

PIN, SHACKLE, SWIVEL

Rigging screw, 2" wire rope

Weight, lbs. **Die number, 3397-B**

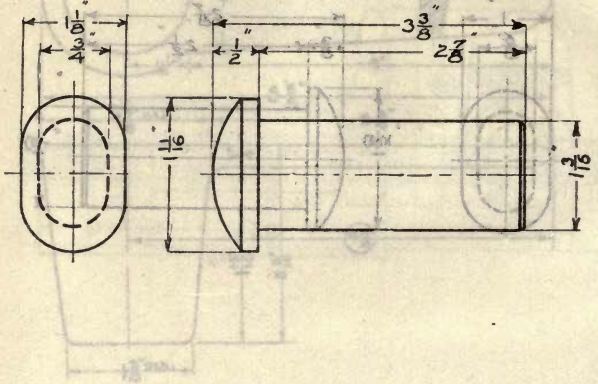

PIN, SHACKLE, SWIVEL

Rigging screw, 2 1/2" wire rope

Weight, lbs. Die number, 3398-B

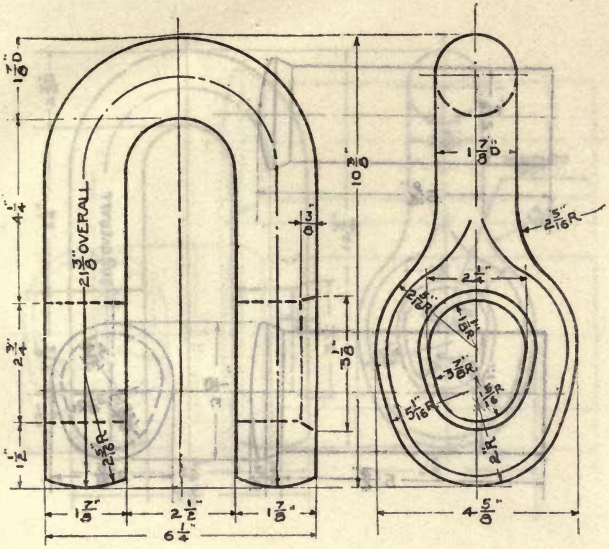

SHACKLE, CONNECTING, 1 5/8″ CHAIN CABLE

Weight, lbs. **Die number, 3399-B**

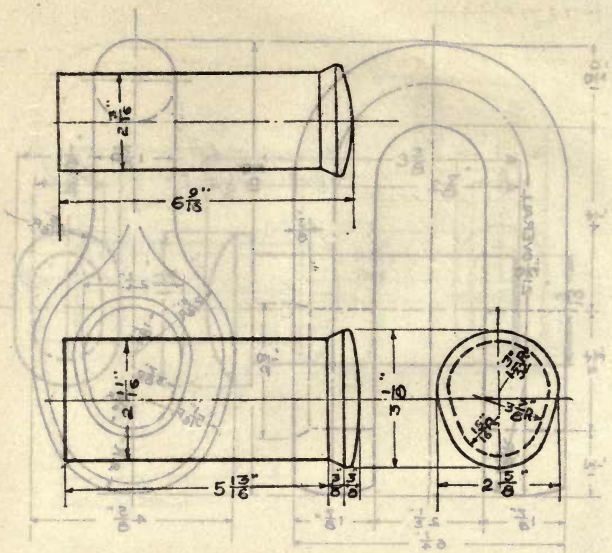

PIN, SHACKLE, CONNECTING, 1 5/8″ CHAIN CABLE

Weight, **lbs.** **Die number, 3400-B**

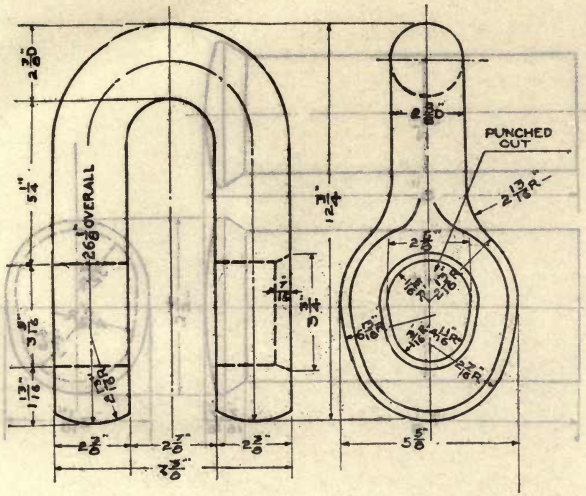

SHACKLE, CONNECTING, 2 1/8″ CHAIN CABLE

Weight, lbs. **Die number, 3401-B**

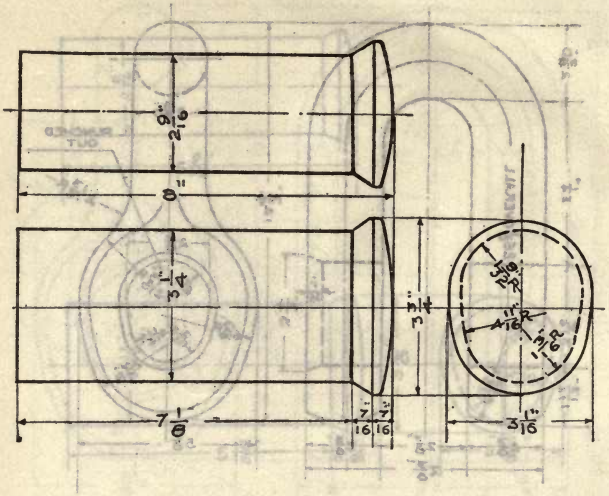

PIN, SHACKLE, CONNECTING, 2 1/8″ CHAIN CABLE

Weight, lbs. Die number, 3402-B

WASHINGTON : GOVERNMENT PRINTING OFFICE : 1920

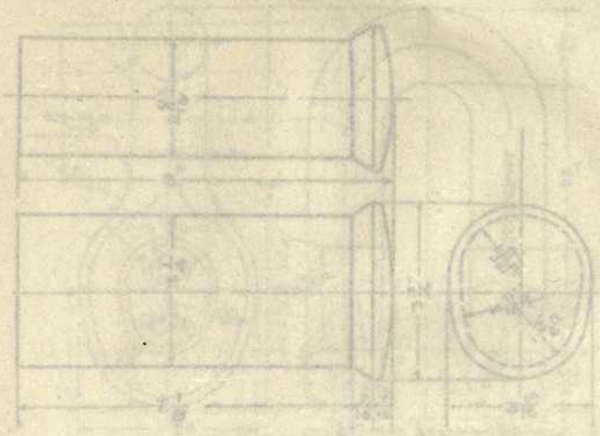

PIN, SHACKLE, CONNECTING, 2 1/8" CHAIN CABLE

Weight, [illegible] lbs. Die number, 2109-3

WASHINGTON : GOVERNMENT PRINTING OFFICE : 1921

THIS BOOK IS DUE ON THE LAST DATE STAMPED BELOW

AN INITIAL FINE OF 25 CENTS

WILL BE ASSESSED FOR FAILURE TO RETURN THIS BOOK ON THE DATE DUE. THE PENALTY WILL INCREASE TO 50 CENTS ON THE FOURTH DAY AND TO $1.00 ON THE SEVENTH DAY OVERDUE.

MAR 25 1941

17Nov'55TF

NOV 3 1955 LU

LD 21-100m-7,'40 (6936s)
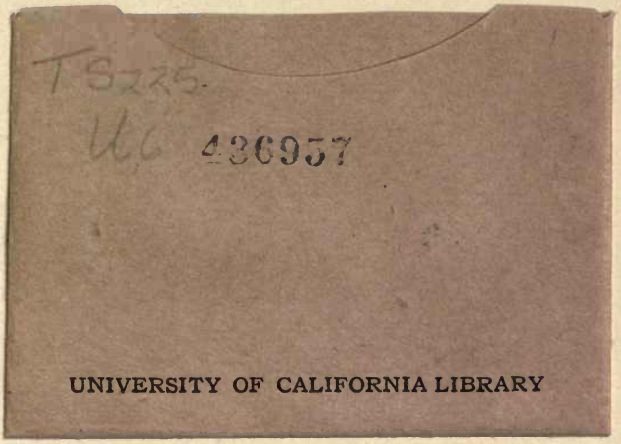
YC 95758